1993 VIGOR SERVICE MANUAL
Published by Honda Motor Co., LTD. Printed in U.S.A.
© 1992 American Honda Motor Co., Inc. - All Rights Reserved
P/N 61SL501 ⓑ ⓥ A O.D.S. 2000 9269 P

ACURA

VIGOR

Service Manual 1993

This manual is divided into 23 sections. The first page of each section is marked with a black tab that lines up with its corresponding thumb index tab on this page and the back cover. You can quickly find the first page of each section without looking through a full table of contents. The symbols printed at the top corner of each page can also be used as a quick reference system.

Each section includes:

1. A table of contents, or an exploded view index showing:
   - Parts disassembly sequence.
   - Bolt torques and thread sizes.
   - Page references to descriptions in text.
2. Disassembly/assembly procedures and tools.
3. Inspection.
4. Testing/troubleshooting.
5. Repair.
6. Adjustments.

Special Information

WARNING Indicates a strong possibility of severe personal injury or loss of life if instructions are not followed.

CAUTION: Indicates a possibility of personal injury or equipment damage if instructions are not followed.

NOTE: Gives helpful information.

CAUTION: Detailed descriptions of *standard workshop* procedures, safety principles and service operations are not included. Please note that this manual contains warnings and cautions against some specific service methods which could cause PERSONAL INJURY, damage a vehicle or make it unsafe. Please understand that these warnings cannot cover all conceivable ways in which service, whether or not recommended by HONDA might be done, or of the possible hazardous consequences of every conceivable way, nor could HONDA investigate all such ways. Anyone using service procedures or tools, whether or not recommended by HONDA, *must satisfy himself thoroughly* that neither personal safety nor vehicle safety will be jeopardized.

All information contained in this manual is based on the latest product information available at the time of printing. We reserve the right to make changes at any time without notice. No part of this publication may be reproduced, stored in retrieval system, or transmitted, in any form by any means, electronic, mechanical, photocopying, recording, or otherwise, without the prior written permission of the publisher. This includes text, figures and tables.

First Eidtion 9/92 1364 pages
All Rights Reserved
Specification apply to U.S.A. and Canada

HONDA MOTOR CO., LTD.
Service Publication Office

Special Tools
Specifications
Maintenance
Engine
Cooling
Fuel and Emissions
*Transaxle
*Steering
Suspension
*Brakes (Including ABS)
*Body
*Heater and Air Conditioner
*Electrical (Including SRS)

As sections with * include SRS components, special precautions are required when servicing.

SUPPLEMENTAL RESTRAINT SYSTEM (SRS)

The VIGOR SRS includes a driver's side airbag, located in the steering wheel hub. In addition, the GS model has a front passenger's airbag located in the dashboard above the glove box. Information necessary to safely service the SRS is included in this Service Manual. Items marked with an asterisk (*) on the contents page include, or are located near, SRS components. Servicing, disassembling or replacing these items will require special precautions and tools, and should therefore be done by an authorized Acura dealer.

⚠WARNING

- **To avoid rendering the SRS inoperative, which could lead to personal injury or death in the event of a severe frontal collision, all maintenance must be performed by an authorized Acura dealer.**
- **Improper maintenance, including incorrect removal and installation of the SRS, could lead to personal injury caused by unintentional activation of the airbag (s).**
- **All SRS electrical wiring harnesses are covered with yellow outer insulation. Related components are located in the steering column, center console, dash, and dashboard lower panel, and in the dashboard above the glove box. Do not use electrical test equipment on these circuits.**

NOTE: The radio may have a coded theft protection circuit. Be sure to get the customer's code number before
– Disconnecting the battery.
– Removing the No. 39 (10 A) fuse in the under-hood fuse/relay box.
– Removing the radio.
After service, reconnect power to the radio and turn it on. When the word "CODE" is displayed, enter the customer's 5-digit code to restore radio operation.

General Information

Chassis and Paint Codes 1-2
Identification Number Locations 1-4
Warning/Caution Label Locations 1-5
Lift and Support Points
  Lift 1-9
  Floor Jack 1-10
  Safety Stands 1-11
Towing 1-12
Service Precautions 1-13

Chassis and Paint Codes

U.S. Model

Vehicle Identification Number

JH4CC254*PC000001

- **Manufacturer, Make and Type of Vehicle**
  - JH4: HONDA MOTOR CO., LTD. ACURA Passenger car
- **Body Type**
  - CC2: VIGOR 4-Door Hardtop/ G25A1
- **Body and Transmission Type**
  - 5:4-Door Hardtop/5-speed Manual
  - 6:4-Door Hardtop/4-speed Automatic
- **Vehicle Grade**
  - 4: LS, without moonroof
  - 6: GS, with moonroof and passenger airbag
- **Check Digit**
- **Model Year**
  - P: 1993
- **Factory Code**
  - C: Saitama Factory in Japan
- **Serial Number**

Engine Number

G25A1-2000001

- **Engine Type**
- **Emission Group**
  - 20: California
  - 23: 49ST
- **Serial Number**
  - California: 00001 ~
  - 49ST : 00006 ~

Transmission Number (Manual Transmission)

L3A3-2000001

- **Transmission Type**
- **Serial Number**

Transmission Number (Automatic Transmission)

MPWA-6000001

- **Transmission Type**
- **Serial Number**

Paint Code

Paint Code	Color
BG-30P	Arcadia Green Pearl
NH-503P	Granada Black Pearl
NH-536M	Solaris Silver Metallic
NH-538	Frost White
R-82P	Cassis Red Pearl
RP-18P	Regal Plum Pearl

Vehicle Identification Number and Federal Motor Vehicle Safety Standard Certification

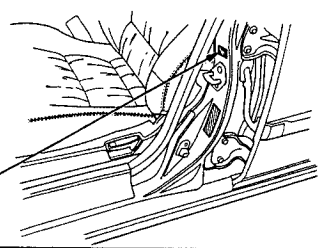

Paint Code

COLOR BG-30P

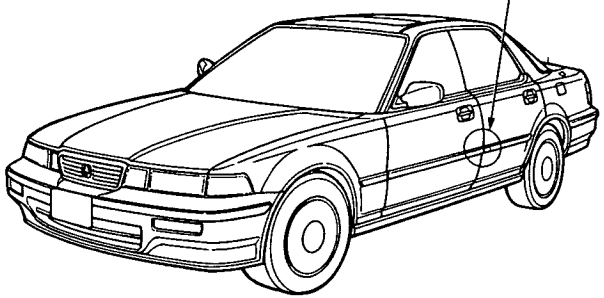

CANADA Model

Vehicle Identification Number

JH4CC254*PC800001

- **Manufacturer, Make and Type of Vehicle**
  - JH4: HONDA MOTOR CO., LTD. ACURA Passenger car
- **Body Type**
  - CC2: VIGOR 4-Door Hardtop/ G25A1
- **Body and Transmission Type**
  - 5:4-Door Hardtop/5-speed Manual
  - 6:4-Door Hardtop/4-speed Automatic
- **Vehicle Grade**
  - 4: LS, without moonroof
  - 6: GS, with moonroof and passenger airbag
- **Check Digit**
- **Model Year**
  - P: 1993
- **Factory Code**
  - C: Saitama Factory in Japan
- **Serial Number**

Engine Number

G25A1-2800001

- **Engine Type**
- **Serial Number**

Transmission Number (Manual Transmission)

L3A3-2000001

- **Transmission Type**
- **Serial Number**

Transmission Number (Automatic Transmission)

MPWA-6000001

- **Transmission Type**
- **Serial Number**

Paint Code

Paint Code	Color
BG-30P	Arcadia Green Pearl
NH-503P	Granada Black Pearl
NH-536M	Solaris Silver Metallic
NH-538	Frost White
RP-18P	Regal Plum Pearl
RP-20M	Vineyard Gray Metallic

Vehicle Identification Number and Canadian Motor Vehicle Safety Standard Certificaion

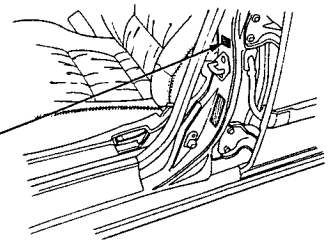

Paint Code

COLOR BG-30P

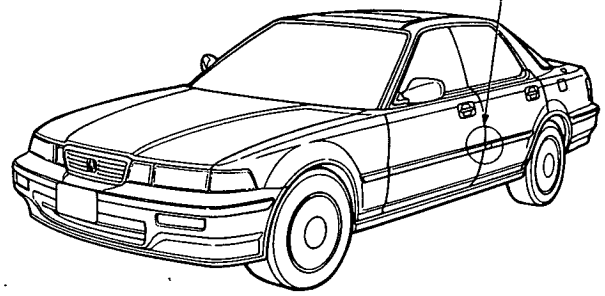

Identification Number Locations

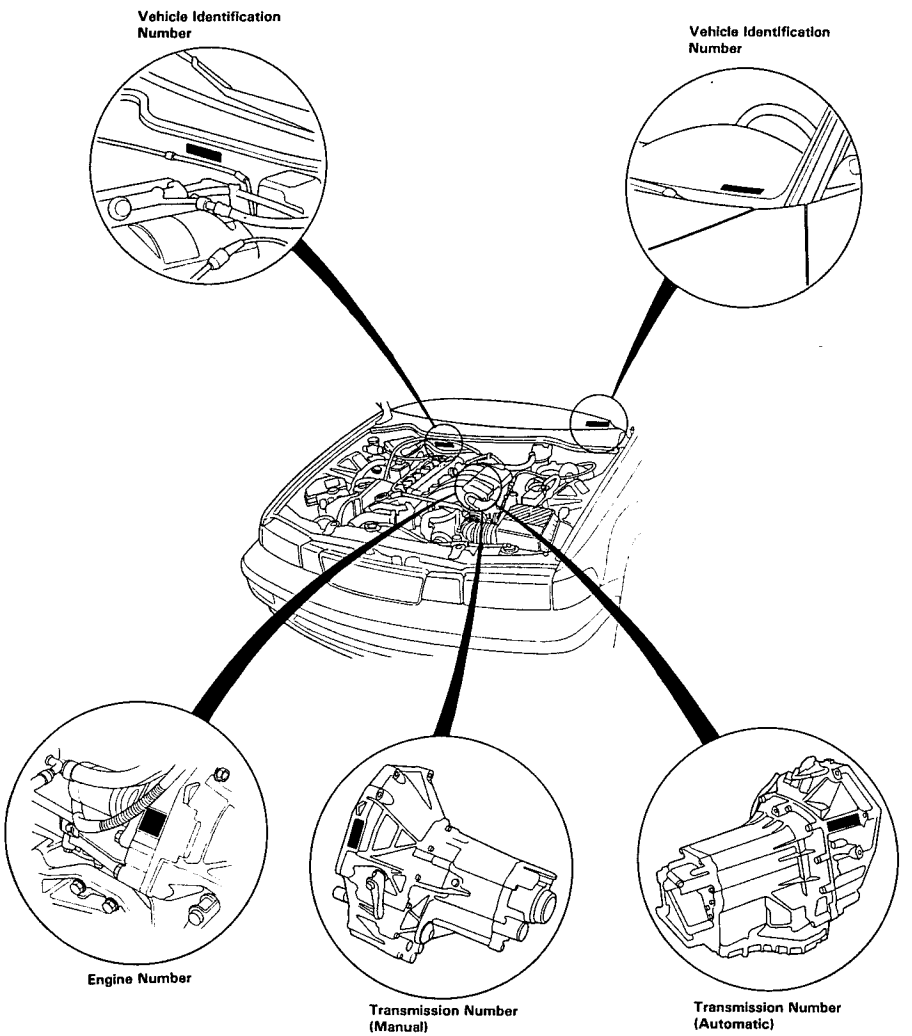

Warning/Caution Label Locations

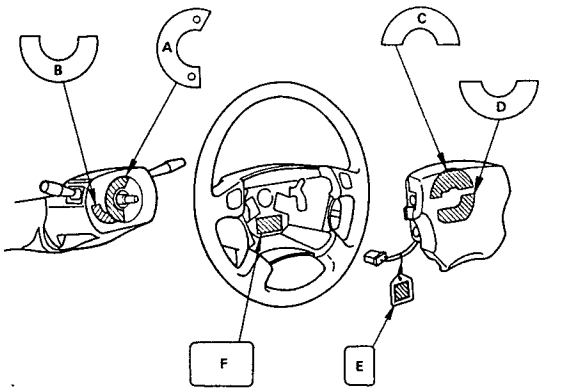

A: CABLE REEL CAUTION A

CAUTION: SRS
BEFORE INSTALLING CABLE REEL:
- CENTER THE FRONT WHEELS.
- ALIGN THE MARKS.
- READ SERVICE MANUAL.

B: CABLE REEL CAUTION B

CAUTION: SRS
NO SERVICEABLE PARTS INSIDE; DO NOT DISASSEMBLE OR TAMPER.

C: DRIVER MODULE DANGER

⚠ DANGER
EXPLOSIVE/FLAMMABLE
CONTACT WITH ACID, WATER OR HEAVY METALS SUCH AS COPPER, LEAD OR MERCURY MAY PRODUCE HARMFUL AND IRRITATING GASES OR EXPLOSIVE COMPOUNDS. STORAGE TEMPERATURES MUST NOT EXCEED 200°F (100°C) FOR PROPER HANDLING, STORAGE AND DISPOSAL PROCEDURES REFER TO SERVICE MANUAL, SRS SUPPLEMENT.
POISON
CONTAINS POISONOUS SODIUM AZIDE AND POTASSIUM NITRATE.
FIRST AID
IF CONTENTS ARE SWALLOWED, INDUCE VOMITING.
FOR EYE CONTACT, FLUSH EYES WITH WATER FOR 15 MINUTES. IF GASES (FROM ACID OR WATER CONTACT) ARE INHALED, SEEK FRESH AIR. IN EVERY CASE, GET PROMPT MEDICAL ATTENTION.
KEEP OUT OF REACH OF CHILDREN.

D: DRIVER MODULE WARNING

⚠ WARNING
THE AIRBAG INFLATOR IS EXPLOSIVE AND, IF ACCIDENTALLY DEPLOYED, CAN SERIOUSLY HURT OR KILL YOU.
- DO NOT USE ELECTRICAL TEST EQUIPMENT OR PROBING DEVICES. THEY CAN CAUSE ACCIDENTAL DEPLOYMENT.
- NO SERVICEABLE PARTS INSIDE. DO NOT DISASSEMBLE.
- PLACE AIRBAG UPRIGHT WHEN REMOVED.
- FOLLOW SERVICE MANUAL INSTRUCTIONS CAREFULLY.

E: INFLATOR WARNING TAG

⚠ WARNING
ACCIDENTAL AIRBAG DEPLOYMENT CAN SERIOUSLY HURT OR KILL YOU. INSTALL THE RED SERVICE CONNECTOR WHEN THE INFLATOR HARNESS IS DISCONNECTED.

F: STEERING WHEEL NOTICE

NOTICE
IMPROPER STEERING WHEEL REMOVAL OR INSTALLATION CAN DAMAGE SRS COMPONENTS. FOLLOW SERVICE MANUAL INSTRUCTION CAREFULLY.

(cont'd)

Warning/Caution Label Locations

(cont'd)

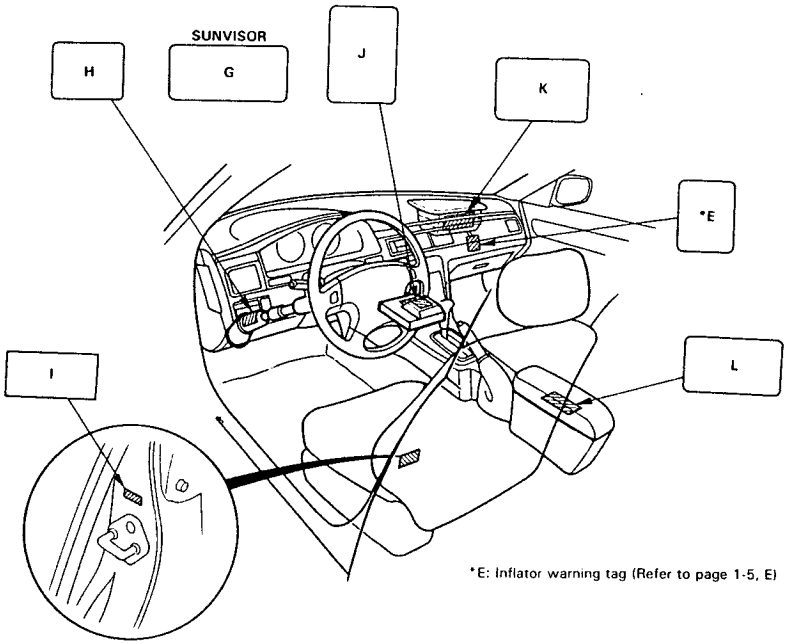

*E: Inflator warning tag (Refer to page 1-5, E)

G: DRIVER INFORMATION

SRS ALWAYS WEAR YOUR SEAT BELT
- THIS CAR IS EQUIPPED WITH A DRIVER AIRBAG AS A SUPPLEMENTAL RESTRAINT SYSTEM (SRS).
- IT IS DESIGNED TO SUPPLEMENT THE SEAT BELT.
- BEFORE DRIVING READ LABEL INSIDE THE CONSOLE BOX.

*G: DRIVER INFORMATION

SRS ALWAYS WEAR YOUR SEAT BELT
- THIS CAR IS EQUIPPED WITH A DRIVER AIRBAG AND A FRONT SEAT PASSENGER AIRBAG AS A SUPPLEMENTAL RESTRAINT SYSTEM (SRS).
- IT IS DESIGNED TO SUPPLEMENT THE SEAT BELT.
- BEFORE DRIVING READ LABEL INSIDE THE CONSOLE BOX.

H: STEERING COLUMN NOTICE

NOTICE
TO PREVENT SRS DAMAGE, REMOVE STEERING WHEEL BEFORE REMOVING STEERING SHAFT CONNECTING BOLT

I: LABEL AIRBAG

J: SRS UNIT CAUTION

CAUTION SRS
- NO SERVICEABLE PARTS INSIDE.
- DO NOT DISASSEMBLE OR TAMPER.
- DO NOT DROP.
- STORE IN A CLEAN, DRY AREA.

K: FRONT SEAT PASSENGER AIRBAG MODULE DANGER

⚠ DANGER
EXPLOSIVE/FLAMMABLE
CONTACT WITH ACID, WATER OR HEAVY METALS SUCH AS COPPER, LEAD OR MERCURY MAY PRODUCE HARMFUL AND IRRITATING GASES OR EXPLOSIVE COMPOUNDS. STORAGE TEMPERATURES MUST NOT EXCEED 200°F (100°C) FOR PROPER HANDLING, STORAGE AND DISPOSAL PROCEDURES REFER TO SERVICE MANUAL, SRS SUPPLEMENT.
POISON
CONTAINS POISONOUS SODIUM AZIDE AND POTASSIUM NITRATE.
FIRST AID
IF CONTENTS ARE SWALLOWED, INDUCE VOMITING.
FOR EYE CONTACT, FLUSH EYES WITH WATER FOR 15 MINUTES. IF GASES (FROM ACID OR WATER CONTACT) ARE INHALED, SEEK FRESH AIR. IN EVERY CASE, GET PROMPT MEDICAL ATTENTION.
KEEP OUT OF REACH OF CHILDREN.

⚠ WARNING
THE AIRBAG INFLATOR IS EXPLOSIVE AND, IF ACCIDENTALLY DEPLOYED, CAN SERIOUSLY HURT OR KILL YOU.
- DO NOT USE ELECTRICAL TEST EQUIPMENT OR PROBING DEVICES. THEY CAN CAUSE ACCIDENTAL DEPLOYMENT.
- NO SERVICEABLE PARTS INSIDE. DO NOT DISASSEMBLE.
- PLACE AIRBAG UPRIGHT WHEN REMOVED.
- FOLLOW SERVICE MANUAL INSTRUCTIONS CAREFULLY.

L: SRS CONSOLE INFORMATION

AIRBAG INFORMATION
SUPPLEMENTAL RESTRAINT SYSTEM (SRS)
- THE SRS MUST BE INSPECTED TEN YEARS AFTER IT IS INSTALLED. THE DATE OF INSTALLATION IS SHOWN ON THE CERTIFICATION PLATE LOCATED ON THE DRIVER'S DOORJAMB.
- DIAGNOSTIC CHECKS AND REPLACEMENT OF SRS COMPONENTS MUST BE DONE BY AN AUTHORIZED DEALER.
- SEE YOUR OWNER'S MANUAL FOR ADDITIONAL SRS INFORMATION.

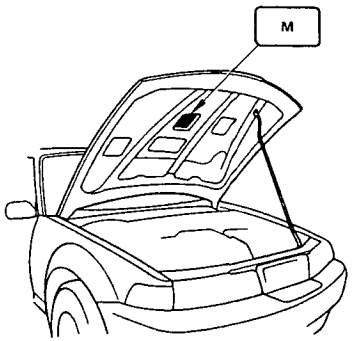

M: SRS WARNING (ENGINE HOOD)

SUPPLEMENTAL RESTRAINT SYSTEM (SRS)
THIS VEHICLE IS EQUIPPED WITH DRIVER AND FRONT SEAT PASSENGER AIRBAGS AND FRONT SEAT BELT TENSIONER SYSTEMS.
ALL SRS ELECTRICAL WIRING AND CONNECTORS ARE COLORED YELLOW.
TAMPERING WITH, DISCONNECTING OR USING ELECTRICAL TEST EQUIPMENT ON THE SRS WIRING CAN MAKE THE SYSTEM INOPERATIVE OR CAUSE ACCIDENTAL FIRING OF THE INFLATOR.

⚠ WARNING
THE AIRBAG INFLATOR IS EXPLOSIVE AND, IF ACCIDENTALLY DEPLOYED, CAN SERIOUSLY HURT YOU.
FOLLOW SERVICE MANUAL INSTRUCTIONS CAREFULLY.

(cont'd)

Warning/Caution Label Locations

(cont'd)

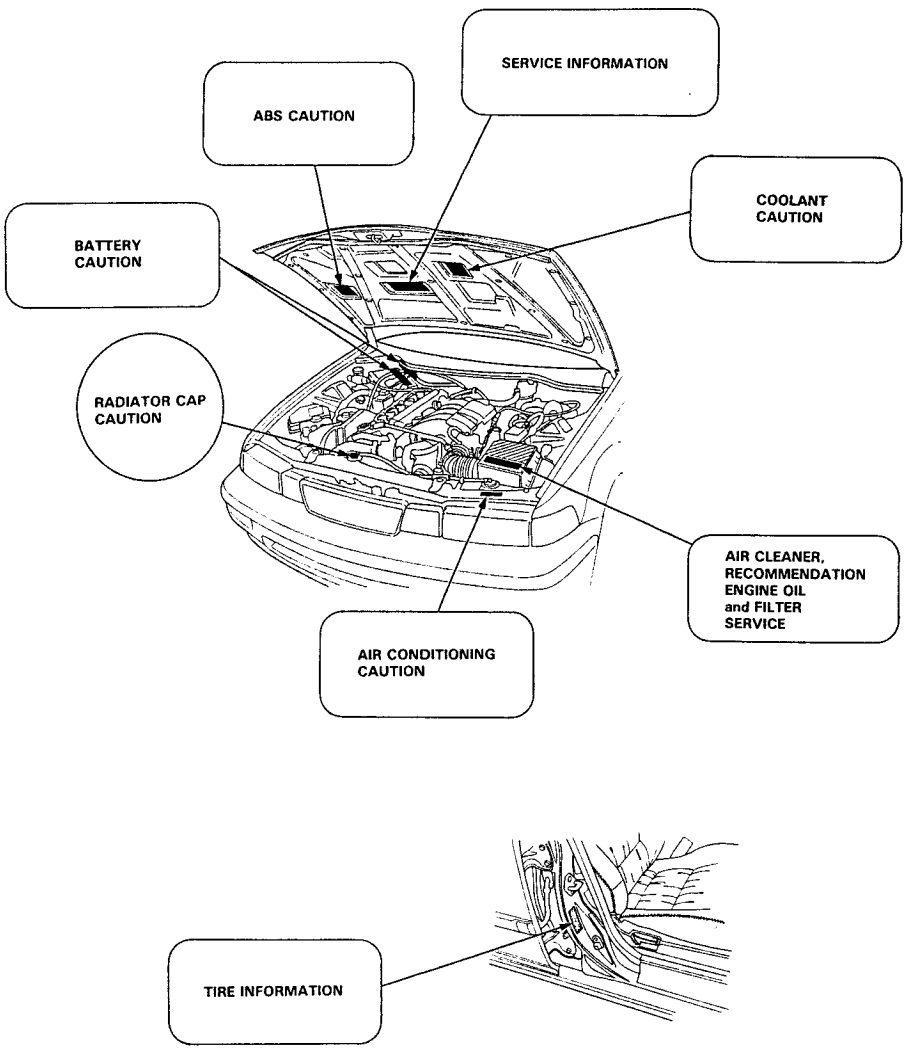

Lift and Support Points

Lift

1. Place the lift blocks as shown.
2. Raise the hoist a few inches and rock the car to be sure it is firmly supported.
3. Raise the hoist to full height and inspect lift points for solid support.

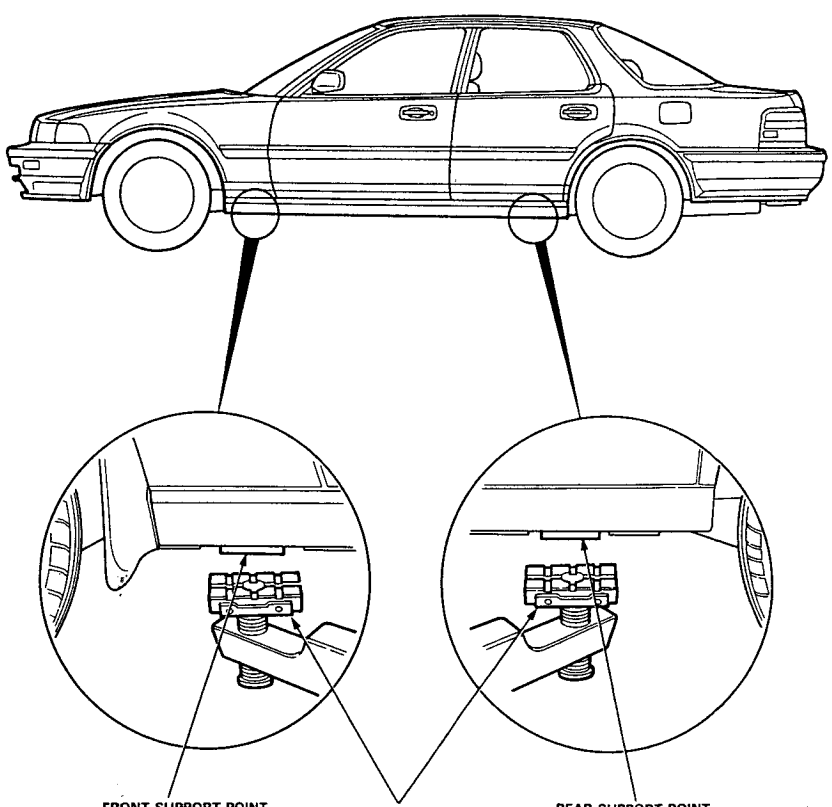

(cont'd)

Lift and Support Points

Floor Jack

1. Set the parking brake and block the wheels that are not being lifted.
2. When lifting the rear of the car, put the gearshift lever in reverse (Automatic transmission in P position).
3. Raise the car high enough to insert the safety stands.
4. Adjust and place the safety stands as shown on page 1-11 so the car will be approximately level, then lower the car onto them.

WARNING

- **Always use safety stands when working on or under any vehicle that is supported by only a jack.**
- **Never attempt to use a bumper jack for lifting or supporting the car.**

Front

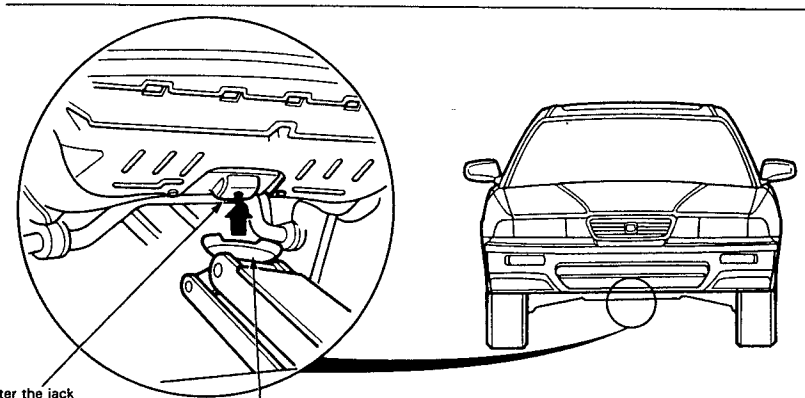

Rear

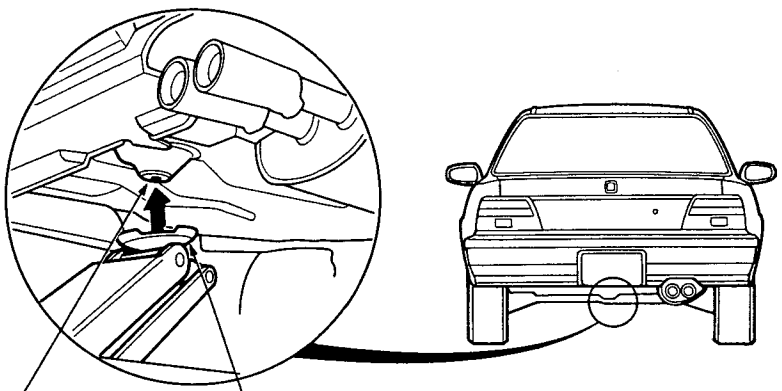

Safety Stands

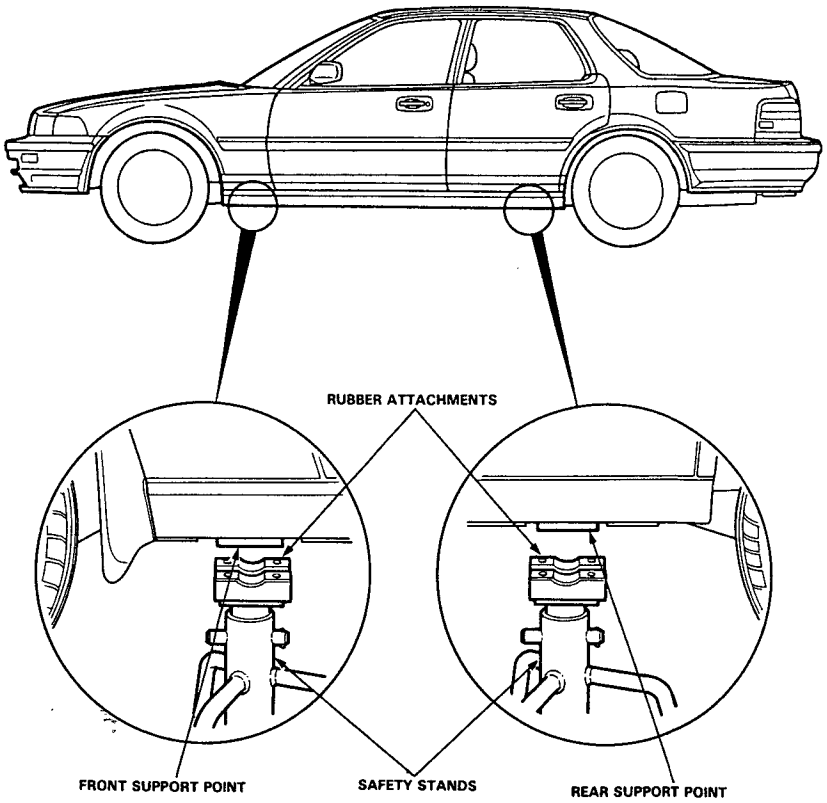

Towing

If the car needs to be towed, call a professional towing service. Never tow the car behind another car with just a rope or chain. It is very dangerous.

Emergency Towing
There are three popular methods of towing a car:

Flat-bed Equipment — The operator loads the car on the back of a truck. This is the best way of transporting the car.

Wheel Lift Equipement — The tow truck uses two pivoting arms that go under the tires (front or rear) and lifts them off the ground. The other two wheels remain on the ground.

Sling-type Equipment — The tow truck uses metal cables with hooks on the ends. These hooks go around parts of the frame or suspension and the cables lift that end of the car off the ground. The car's suspension and body can be seriously damaged if this method of towing is attempted.

If the car cannot be transported by flat-bed, it should be towed with the front wheels off the ground. If due to damage, the car must be towed with the front wheels on the ground, do the following:

5-speed Manual Transmission
- Release the parking brake.
- Shift the transmission to neutral.

Automatic Transmission
- Release the parking brake.
- Start the engine.
- Shift to [D4] position, then to [N] position.
- Turn off the engine.

NOTICE: Improper towing preparation will damage the transmission. Follow the above procedure exactly. If you can not shift the transmission or start the engine (automatic transmission), the car must be transported on a flat-bed.
- It is best to tow the car no farther than 50 miles (80 km), and keep the speed below 35 mph (55 km/h).

NOTICE: Trying to lift or tow the car by the bumpers will cause serious damage. The bumpers are not designed to support the car's weight.

Front:

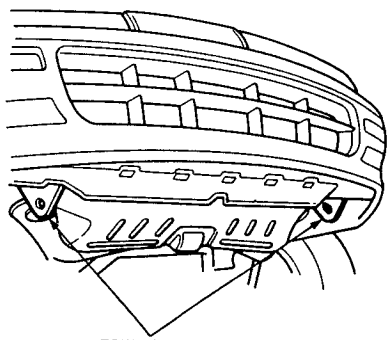

TOWING HOOKS and
TIE DOWN BRACKETS

Rear:

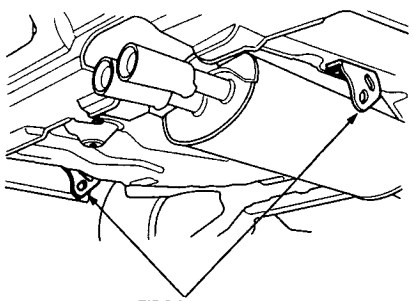

TIE DOWN BRACKETS

Service Precautions

Handling of Special Nuts and Bolts

Because the front sub frame sections on this car are constructed with aluminum alloys, use only the special "Dacro" type nuts and bolts recommended by Acura.

NOTE:
- Dacro finish can be identified by gray plating.
- Some Dacro finish bolts have a green coating on the thread section of the bolt for easier application. This type of bolt is called a "Torquer" bolt.
- Use of other types of nuts and bolts may cause electrolysis and corrosion which in turn could cause the bolt to loosen.

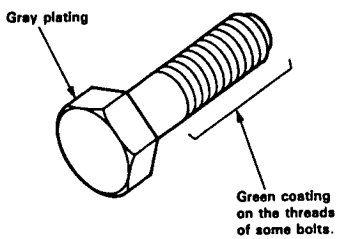

Gray plating: "Dacro" type
Gray plating + Green coating on the threads: "Torquer" type

1. When replacing nuts and bolts, use only the same type.
2. Tighten the nuts and bolts with a torque wrench to the specifications provided in this manual.
3. Clean all thread ridges with a non wire type bristle brush. Foreign matter in the threads may cause the bolt to loosen.
4. Sections on this car requiring the use of Dacro nuts and bolts will be indicated by a (☆) in this manual.

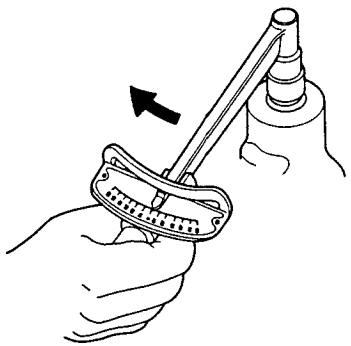

Special Tools

Individual tool lists are located at the front of each section.

Specifications

Standards and Service Limits 3-2
Design Specifications 3-13
Body Specifications 3-16

Standards and Service Limits

Cylinder Head/Valve Train—Section 6

	MEASUREMENT		STANDARD (NEW)	SERVICE LIMIT
Compression	250 rpm and wide open throttle kPa (kg/cm², psi)	Nominal	1,450 (14.5, 206)	
		Minimum	950 (9.5, 135)	
		Maximum variation	200 (2.0, 28)	
Cylinder head	Warpage		—	0.05 (0.002)
	Height		99.95–100.05 (3.935–3.939)	—
Camshaft	End play		0.05–0.15 (0.002–0.006)	0.5 (0.02)
	Camshaft-to-holder oil clearance		0.050–0.089 (0.002–0.004)	0.15 (0.006)
	Total runout		0.03 (0.001) max.	0.06 (0.002)
	Cam lobe height	IN	39.203 (1.5434)	—
		EX	38.875 (1.5305)	—
Valve	Valve clearance	IN	0.24–0.28 (0.009–0.011)	—
		EX	0.28–0.32 (0.011–0.013)	—
	Valve stem O.D.	IN	5.475–5.485 (0.2156–0.2159)	5.445 (0.2144)
		EX	5.450–5.460 (0.2146–0.2150)	5.420 (0.2134)
	Stem-to-guide clearance	IN	0.020–0.045 (0.0008–0.0018)	0.075 (0.0030)
		EX	0.05–0.08 (0.002–0.003)	0.12 (0.005)
Valve seat	Width	IN	1.25–1.55 (0.049–0.061)	2.0 (0.079)
		EX	1.25–1.55 (0.049–0.061)	2.0 (0.079)
	Stem installed height	IN	48.745–49.215 (1.9191–1.9376)	49.465 (1.9474)
		EX	51.315–51.785 (2.0203–2.0388)	52.035 (2.0486)
Valve spring	Free length	IN	52.13 (2.052) *1	—
			52.12 (2.052) *2	—
		EX	56.10 (2.209) *1	—
			56.08 (2.208) *2	—
Valve guide	I.D.	IN	5.505–5.520 (0.2167–0.2173)	5.52 (0.2173)
		EX	5.51–5.53 (0.217–0.218)	5.53 (0.218)
	Installed height	IN	24.75–25.25 (0.974–0.994)	—
		EX	16.05–16.55 (0.632–0.652)	—
Rocker arm	Arm-to-shaft clearance	IN	0.017–0.050 (0.0007–0.0020)	0.08 (0.003)
		EX	0.018–0.054 (0.0007–0.0021)	0.08 (0.003)

*1: NIHON HATSUJO manufactured valve spring, *2: CHUO HATSUJO manufactured valve spring.

Unit of length: mm (in)

Engine Block—Section 7

	MEASUREMENT		STANDARD (NEW)	SERVICE LIMIT
Cylinder block	Warpage of deck surface		0.07 (0.003) max.	0.10 (0.004)
	Bore diameter	A	85.010–85.020 (3.3468–3.3472)	85.070 (3.3492)
		B	85.000–85.010 (3.3465–3.3468)	85.070 (3.3492)
	Bore taper		—	0.05 (0.002)
	Reboring limit		—	0.5 (0.02)
Piston	Skirt O.D. *	No Letter (A)	84.980–84.990 (3.3457–3.3461)	84.970 (3.3453)
		B	84.970–84.980 (3.3453–3.3457)	84.960 (3.3449)
	Clearance in cylinder		0.010–0.040 (0.0004–0.0016)	0.05 (0.002)
	Groove width (for ring)	Top	1.22–1.23 (0.048–0.048)	1.25 (0.049)
		Second	1.22–1.23 (0.048–0.048)	1.25 (0.049)
		Oil	2.805–2.825 (0.1104–0.1112)	2.85 (0.112)
Piston ring	Ring-to-groove clearance	Top	0.035–0.060 (0.0014–0.0024)	0.13 (0.005)
		Second	0.030–0.055 (0.0012–0.022)	0.13 (0.005)
	Ring end gap	Top	0.20–0.35 (0.008–0.014)	0.60 (0.024)
		Second	0.40–0.55 (0.016–0.022)	0.70 (0.028)
		Oil	0.20–0.70 (0.008–0.028)	0.80 (0.031)
Piston Pin	O.D.		21.994–22.000 (0.8659–0.8661)	—
	Pin-to-piston clearance		0.012–0.024 (0.0005–0.0009)	—
Connecting rod	Pin-to-rod interference		0.013–0.032 (0.0005–0.0013)	—
	Small end bore diameter		21.968–21.981 (0.8649–0.8654)	—
	Large end bore diameter	Nominal	48.0 (1.89)	—
	End play installed on crankshaft		0.15–0.30 (0.006–0.012)	0.40 (0.016)
	Small end bore-to-large end bore parallelism		0.12 (0.005)/100 max.	0.15 (0.006)/100
Crankshaft	Main journal diameter		54.976–55.000 (2.1644–2.1654)	—
	Rod journal diameter		44.976–45.000 (1.7707–1.7717)	—
	Taper		0.010 (0.0004) max.	0.01 (0.0004)
	Out-of-round		0.010 (0.0004) max.	0.01 (0.0004)
	End play		0.10–0.35 (0.004–0.014)	0.45 (0.18)
	Total runout		0.03 (0.001) max.	0.06 (0.002)
Bearings	Main bearing-to-journal oil clearance		0.018–0.048 (0.0007–0.0019)	0.053 (0.0021)
	Rod bearing-to-journal oil clearance		0.015–0.043 (0.0006–0.0017)	0.05 (0.002)

*: Measured at 21.0 mm (0.83 in) from bottom at skirt

Engine Lubrication—Section 8

	MEASUREMENT		STANDARD (NEW)	SERVICE LIMIT
Engine oil	Capacity ℓ (US qt, Imp qt)		5.2 (5.5, 4.6) for engine overhaul 4.3 (4.5, 3.8) for oil change, including filter	
Oil pump	Displacement ℓ (US qt, Imp qt)/min @rpm		60.0 (63.4, 52.8) @6,000	
	Inner-to-outer rotor radial clearance		0.04–0.16 (0.002–0.006)	0.20 (0.008)
	Housing-to-outer rotor radial clearance		0.10–0.18 (0.004–0.007)	0.20 (0.008)
	Housing-to-rotor axial clearance		0.02–0.07 (0.001–0.003)	0.12 (0.005)
Relief valve	Pressure setting at oil temperature 176°F (80°C) kPa (kg/cm², psi)	at idle	70 (0.7, 10) min.	
		at 3,000 rpm	350 (3.5, 50) min.	

Standards and Service Limits

Cooling—Section 10

	MEASUREMENT	STANDARD (NEW)
Radiator	Engine coolant capacity ℓ (US qt, Imp qt) (including engine, heater, cooling line and reservoir) reservoir capacity: 0.70 ℓ (0.74 US qt, 0.62 Imp qt)	M/T: 7.6 (8.0, 6.7) for overhaul 6.0 (6.3, 5.3) for coolant change A/T: 7.5 (7.9, 6.6) for overhaul 5.9 (6.2, 5.2) for coolant change
Radiator cap	Opening pressure kPa (kg/cm², psi)	95–125 (0.95–1.25, 13.5–17.8)
Thermostat	Start to open °F (°C) Primary Secondary Fully open °F (°C) Valve lift at fully open Primary Secondary	176–183 (80–84) 181–189 (83–87) 203 (95) 10.0 (0.39) min. 8.5 (0.33) min.
Water pump	Displacement ℓ (US qt, Imp qt)/min @rpm	150.0 (158.5, 132.0) @6,000
Radiator fan	Thermoswitch "ON" temperature °F (°C) Thermoswitch "OFF" temperature °F (°C)	194–205 (90–96) 181–196 (83–91)

Fuel and Emission—Section 11

	MEASUREMENT	STANDARD (NEW)
Fuel pump	Displacement cc (US oz, Imp oz) in 10 seconds Relief valve opening pressure kPa (kg/cm², psi)	230 (7.8, 8.1) min. 450–600 (4.5–6.0, 64.0–85.3)
Pressure	Pressure with regulator vacuum hose disconnected kPa (kg/cm², psi)	300–350 (3.0–3.5, 43–50)
Fuel tank	Capacity ℓ (US gal, Imp gal)	65 (17.2, 14.3)
Engine	Fast idle rpm	1400
	Idle speed rpm (with headlight and cooling fan off)	M/T 700 (neutral) A/T 700 (P or N position)
	Idle CO %	0.1 max.

Clutch—Section 12

	MEASUREMENT	STANDARD (NEW)	SERVICE LIMIT
Clutch pedal	Clutch pedal height to the floor panel Stroke at pedal Total clutch pedal free play (include the pedal play) Pedal play Clutch pedal disengagement height to the floor panel to carpet (Reference)	207.5 (8.17) 140–150 (5.51–5.91) 9–15 (0.35–0.59) 1.0–7.0 (0.04–0.28) 116.4 (4.58) min. 82.0 (3.23) min.	— — — — — —
Flywheel	Runout	0.05 (0.002) max.	0.15 (0.006)
Clutch disc	Rivet depth Surface runout Thickness	1.3 (0.05) min. 0.6 (0.02) max. 8.6–9.3 (0.34–0.37)	0.2 (0.01) 0.8 (0.03) 6.2 (0.24)
Pressure plate	Warpage	0.03 (0.001) max.	0.8 (0.03)

Manual Transmission—Section 13

Unit of length: mm (in)

	MEASUREMENT	STANDARD (NEW)	SERVICE LIMIT
Transmission oil	Capacity ℓ (US qt, Imp qt)	2.0 (2.1, 1.8) for overhaul 1.8 (1.9, 1.6) for oil change	
Mainshaft	Diameter of needle bearing contact area Clutch housing side 3rd gear Diameter of ball bearing contact area Transmission housing side Runout	 27.977–27.990 (1.1015–1.1020) 35.984–36.000 (1.4167–1.4173) 28.987–29.000 (1.1412–1.1417) 0.02 (0.001) max.	 27.930 (1.0996) 35.930 (1.4146) 28.940 (1.1394) 0.05 (0.002)
Mainshaft 3rd gear	I.D. End play Thickness	41.009–41.025 (1.6145–1.6152) 0.05–0.20 (0.002–0.008) 27.92–27.97 (1.099–1.101)	41.080 (1.6173) 0.3 (0.01) 27.85 (1.097)
Mainshaft 4th gear	I.D. End play Thickness	41.009–41.025 (1.6145–1.6152) 0.05–0.17 (0.002–0.007) 34.92–34.97 (1.375–1.377)	41.080 (1.6173) 0.3 (0.012) 34.85 (1.372)
Distance collar (Mainshaft 4th gear)	I.D. O.D. Length	29.002–29.012 (1.1418–1.1422) 35.989–36.000 (1.4169–1.4173) 27.050–27.070 (1.0650–1.0657)	29.060 (1.1441) 35.940 (1.4150) 27.03 (1.064)
Mainshaft 5th gear	I.D. End play Thickness	41.009–41.025 (1.6145–1.6152) 0.05–0.17 (0.002–0.007) 31.42–31.47 (1.237–1.239)	41.080 (1.6173) 0.3 (0.01) 31.35 (1.234)
Distance collar (Mainshaft 5th gear)	I.D. O.D. Length	29.002–29.012 (1.1418–1.1422) 35.989–36.000 (1.4169–1.4173) 27.050–27.070 (1.0650–1.0657)	29.060 (1.1441) 35.940 (1.4150) 27.03 (1.064)
Countershaft	Diameter of needle bearing contact area Clutch housing side 1st gear Diameter of ball bearing contact area Transmission housing side Transmission cover side Runout	 33.000–33.015 (1.2992–1.2998) 43.984–44.000 (1.7317–1.7323) 27.977–27.990 (1.1015–1.1020) 24.980–24.993 (0.9835–0.9840) 0.02 (0.001) max.	 32.950 (1.2972) 43.930 (1.7295) 27.930 (1.0996) 24.930 (0.9815) 0.05 (0.002)
Countershaft 1st gear	I.D. End play (when tightened by the specified torque) Thickness	50.009–50.025 (1.9689–1.9695) 0.05–0.11 (0.002–0.004) 35.95–36.00 (1.415–1.417)	50.080 (1.9716) Adjust with a thrust shim 35.88 (1.413)
Countershaft 2nd gear	I.D. End play (when tightened by the specified torque) Thickness	46.009–46.025 (1.8114–0.8120) 0.06–0.135 (0.002–0.005) 33.92–33.97 (1.335–1.337)	46.080 (1.8142) 0.3 (0.01) 33.85 (1.333)
Distance collar (Countershaft 2nd gear)	I.D. O.D. Thickness	34.980–34.990 (1.3772–1.3776) 40.989–41.000 (1.6137–1.6142) 34.085–34.105 (1.3419–1.3427)	35.038 (1.3794) 40.940 (1.6118) —
Reverse idler gear	I.D. Gear-to-shaft clearance	20.054–20.081 (0.7895–0.7906) 0.074–0.122 (0.0029–0.0048)	20.109 (0.7917) 0.150 (0.0059)

(cont'd)

Standards and Service Limits

Manual Transmission (cont'd) — Section 13

	MEASUREMENT	STANDARD (NEW)	SERVICE LIMIT
Synchro ring	Ring-to-gear clearance (ring pushed against)	0.85–1.10 (0.034–0.043)	0.4 (0.02)
Double cone synchro ring	Clearance (ring pushed against gear)		
	Outer synchro ring-to-gear	0.95–1.68 (0.037–0.066)	0.6 (0.02)
	Synchro cone-to-gear	0.5–1.0 (0.02–0.04)	0.3 (0.01)
	Outer synchro ring-to-synchro cone	0.5–1.0 (0.02–0.04)	0.3 (0.01)
1st/2nd shift fork	Finger thickness	7.4–7.6 (0.29–0.30)	—
	Finger-to-synchro sleeve clearance	0.35–0.65 (0.014–0.026)	1.0 (0.04)
	Fork-to-shift piece clearance	0.2–0.5 (0.01–0.02)	0.7 (0.03)
	Groove width of shift piece contact point	12.2–12.4 (0.48–0.49)	—
3rd/4th shift fork	Finger thickness	7.4–7.6 (0.29–0.30)	—
	Finger-to-synchro sleeve clearance	0.35–0.65 (0.014–0.026)	1.0 (0.04)
	Fork-to-shift piece clearance	0.2–0.5 (0.01–0.02)	0.7 (0.03)
	Groove width of shift piece contact point	12.2–12.4 (0.48–0.49)	—
5th/reverse shift fork	Finger thickness	7.4–7.5 (0.29–0.30)	—
	Finger-to-synchro sleeve clearance	0.35–0.65 (0.014–0.026)	1.0 (0.04)
5th/reverse shift piece	Width of 5th/reverse shift piece pin	6.9–7.0 (0.27–0.28)	—
	Groove width of shift piece contact point	12.2–12.4 (0.48–0.49)	—
Reverse shift holder	Finger groove width	14.0–14.3 (0.55–0.56)	—
	Groove-to-reverse idler gear clearance	0.5–1.1 (0.02–0.04)	1.7 (0.07)
	Groove width A	7.05–7.25 (0.278–0.285)	—
	Groove width B	7.4–7.7 (0.29–0.30)	—
	Groove-to-5th/reverse shift piece pin clearance A	0.05–0.35 (0.002–0.014)	0.5 (0.02)
	Groove-to-5th/reverse shift piece pin clearance B	0.4–0.8 (0.02–0.03)	1.0 (0.04)
Shift arm	Diameter of change piece contact point	12.8–13.0 (0.50–0.51)	—
	Shift arm-to-change piece clearance	0.10–0.40 (0.004–0.016)	0.5 (0.02)
	Diameter of shift piece contact point	12.8–13.0 (0.50–0.51)	—
	Shift arm-to-shift piece clearance	0.10–0.40 (0.004–0.016)	0.6 (0.02)
Change piece	Groove width of shift arm contact point	13.10–13.20 (0.516–0.520)	—
	Groove width of select arm contact point	12.05–12.15 (0.474–0.478)	—
	Change piece-to-select arm clearance	0.05–0.35 (0.002–0.014)	0.5 (0.02)
Shift piece	Groove width of shift arm contact point	13.10–13.20 (0.516–0.520)	—
	Shift piece to shift fork shafts or 5th/reverse shift piece clearance	0.2–0.5 (0.01–0.02)	0.7 (0.03)
	Width of shift fork shafts and 5th/reverse shift piece contact point	11.9–12.0 (0.469–0.472)	—
Select arm	Diameter of change piece contact point	11.8–12.0 (0.46–0.47)	—
Secondary gear	Backlash	0.058–0.116 (0.0023–0.0046)	0.176 (0.0069)
	Preload N·m (kg-cm, lb-in)	1.8–3.0 (18–30, 15.6–26.0)	Adjust with a thrust shim
	Diameter of bearing contact area — Transmission housing side:	40.002–40.018 (1.5749–1.5755)	—
	Diameter of bearing contact area — Clutch housing side:	50.002–50.018 (1.9685–1.9692)	—
	Diameter of oil seal contact area	39.738–39.800 (1.5645–1.5669)	—
Oil pump	Inner rotor-to-outer rotor tip clearance	0.14 (0.006) max.	0.20 (0.008)
	Clutch housing-to-outer rotor clearance	0.10–0.20 (0.004–0.008)	0.22 (0.009)
	Clutch housing-to-rotor axial clearance	0.03–0.15 (0.001–0.006)	0.20 (0.008)

Unit of length: mm (in)

Automatic Transmission — Section 14

	MEASUREMENT	STANDARD (NEW)	SERVICE LIMIT
Transmission fluid	Capacity ℓ (US qt, Imp qt)	7.2 (7.6, 6.3) for overhaul 2.5 (2.6, 2.2) for fluid change	
Hydraulic pressure kPa (kg/cm², psi)	Line pressure at 2,000 rpm [N] or [P] position	850–900 (8.5–9.0, 121–128)	800 (8.0, 114)
	1st clutch pressure at 2,000 rpm [D4] or [1] position		
	2nd clutch pressure at 2,000 rpm [D4] position	500 (5.0, 71) throttle fully closed 900 (9.0, 128) throttle more than 1/4 opened	450 (4.5, 64) throttle fully closed 800 (8.0, 114) throttle more than 1/4 opened
	3rd clutch pressure at 2,000 rpm [D4] position		
	4th clutch pressure at 2,000 rpm [D4] position		
	2nd clutch pressure at 2,000 rpm [2] position	850–900 (8.5–9.0, 121–128)	800 (8.0, 114)
	1st and 1st-hold clutch pressure at 2,000 rpm [1] position	850–900 (8.5–9.0, 121–128)	800 (8.0, 114)
	Throttle B pressure — Throttle fully closed	0 (0, 0)	—
	Throttle B pressure — Throttle fully open	500–530 (5.0–5.3, 71–75)	470 (4.7, 67)
	Modulator pressure	460–510 (4.6–5.1, 65–73)	410 (4.1, 58)
Stall speed rpm (check with car on level ground)		2,200–2,500	—
Clutch	Clutch initial clearance — 1st-hold	0.80–1.00 (0.031–0.039)	—
	Clutch initial clearance — 1st	0.65–0.85 (0.026–0.033)	—
	Clutch initial clearance — 2nd, 3rd, 4th	0.55–0.75 (0.022–0.030)	—
	Clutch return spring free length — 1st, 3rd	33.2 (1.31)	31.2 (1.23)
	Clutch return spring free length — 2nd, 4th	33.9 (1.33)	31.9 (1.26)
	Clutch return spring free length — 1st-hold	32.0 (1.30)	30.0 (1.18)
		31.0 (1.22)	29.0 (1.14)
	Clutch disc thickness	1.88–2.00 (0.074–0.079)	Until grooves worn out
	Clutch plate thickness — 1st, 3rd, 1st-hold	1.95–2.05 (0.077–0.081)	Discoloration
	Clutch plate thickness — 2nd, 4th	2.25–2.35 (0.089–0.093)	Discoloration
	Clutch end plate thickness (1st, 1st-hold and 3rd) — Mark 1	2.05–2.10 (0.081–0.083)	Discoloration
	Mark 2	2.15–2.20 (0.085–0.087)	
	Mark 3	2.25–2.30 (0.089–0.091)	
	Mark 4	2.35–2.40 (0.093–0.094)	
	Mark 5	2.45–2.50 (0.096–0.098)	
	Mark 6	2.55–2.60 (0.100–0.102)	
	Mark 7	2.65–2.70 (0.104–0.106)	
	Mark 8	2.75–2.80 (0.108–0.110)	
	Mark 9	2.85–2.90 (0.112–0.114)	
	Mark 10	2.95–3.00 (0.116–0.118)	
	Mark 11*	3.05–3.10 (0.120–0.122)	
	Mark 12*	3.15–3.20 (0.124–0.126)	
	Mark 13*	3.25–3.30 (0.128–0.130)	
	1st and 1st-hold only — Mark 14	3.35–3.40 (0.132–0.134)	Discoloration
	Clutch end plate thickness (2nd and 4th) — Mark 1	2.05–2.10 (0.081–0.083)	Discoloration
	Mark 2	2.15–2.20 (0.085–0.087)	
	Mark 3	2.25–2.30 (0.089–0.091)	
	Mark 4	2.35–2.40 (0.093–0.094)	
	Mark 5	2.45–2.50 (0.096–0.098)	
	Mark 6	2.55–2.60 (0.100–0.102)	
	Mark 7	2.65–2.70 (0.104–0.106)	
	Mark 8	2.75–2.80 (0.108–0.110)	
	Mark 9	2.85–2.90 (0.112–0.114)	Discoloration

(cont'd)

Standards and Service Limits

Automatic Transmission (cont'd)—Section 14

	MEASUREMENT	STANDARD (NEW)	SERVICE LIMIT
Valve body	Stator shaft needle bearing contact I.D.		
	Torque converter side	27.000–27.021 (1.0630–1.0638)	Wear or damage
	Oil pump side	29.000–29.013 (1.1417–1.1422)	——
	Oil pump gear side clearance	0.03–0.05 (0.001–0.002)	0.07 (0.003)
	Oil pump gear-to-body clearance Drive	0.210–0.265 (0.0083–0.0104)	——
	Driven	0.070–0.125 (0.0028–0.0049)	——
	Oil pump driven gear I.D.	14.016–14.034 (0.5518–0.5525)	Wear or damage
	Oil pump driven gear shaft O.D.	13.980–13.990 (0.5504–0.5508)	Wear or damage
Shifting device and parking brake control	Reverse shift fork finger thickness	5.90–6.00 (0.232–0.236)	5.40 (0.213)
	Parking brake rachet pawl	——	Wear or other defect
	Parking gear	——	
Servo body	Shift fork shaft bore I.D.	14.000–14.010 (0.5512–0.5516)	——
	Shift fork shaft valve bore I.D.	37.000–37.039 (1.4567–1.4582)	37.045 (1.4585)
Regulator valve body	Sealing ring contact I.D.	35.000–35.025 (1.3780–1.3789)	35.050 (1.3799)
Stator shaft	Sealing ring contact I.D.	29.000–29.013 (1.1417–1.1422)	29.050 (1.1437)
Transmission	Thrust washer thickness		
	Mainshaft ball bearing Fr side	3.45–3.55 (0.136–0.140)	Wear or damage
	Mainshaft 1st gear Fr side	1.45–1.50 (0.057–0.059)	1.40 (0.055)
	Mainshaft 1st gear Rr side	2.43–2.50 (0.096–0.098)	Wear or damage
	Countershaft 1st gear Rr side	3.43–3.50 (0.135–0.138)	Wear or damage
	Mainshaft 4th gear collar length	47.50–47.55 (1.870–1.872)	——
	Mainshaft 1st gear collar length	35.50–35.55 (1.398–1.400)	——
	Mainshaft 1st gear collar flange thickness	3.25–3.40 (0.128–0.134)	Wear or damage
	Mainshaft 2nd gear thrust washer thickness	3.97–4.00 (0.156–0.157)	Wear or damage
		4.02–4.05 (0.158–0.159)	
		4.07–4.10 (0.160–0.161)	
		4.12–4.15 (0.162–0.163)	
		4.17–4.20 (0.164–0.165)	
		4.22–4.25 (0.166–0.167)	
		4.27–4.30 (0.168–0.169)	
		4.32–4.35 (0.170–0.171)	
		4.37–4.40 (0.172–0.173)	
		4.42–4.45 (0.174–0.175)	
		4.47–4.50 (0.176–0.177)	Wear or damage
	Mainshaft sealing ring 35 mm thickness	1.980–1.995 (0.0780–0.0785)	1.80 (0.071)
	Mainshaft sealing ring 29 mm thickness	1.980–1.995 (0.0780–0.0785)	1.80 (0.071)
	Mainshaft sealing ring groove width	2.025–2.060 (0.0797–0.0811)	2.08 (0.082)
	Countershaft 3rd gear distance collar length	24.05–24.10 (0.947–0.949)	——
	Countershaft 3rd gear distance collar flange thickness	4.35–4.50 (0.171–0.177)	Wear or damage
	Countershaft reverse gear collar length	14.00–14.05 (0.551–0.553)	——
	Countershaft reverse gear collar flange thickness	2.45–2.60 (0.096–0.102)	Wear or damage
	Countershaft 1st gear collar length	60.00–60.05 (2.362–2.364)	——
	Countershaft distance collar 35 mm length	65.625–65.675 (2.5837–2.5856)	——
		65.675–65.725 (2.5856–2.5876)	——
		65.725–65.775 (2.5876–2.5896)	——
		65.775–65.825 (2.5896–2.5915)	——
		65.825–65.875 (2.5915–2.5935)	——
		65.875–65.925 (2.5935–2.5955)	——
		65.925–65.975 (2.5955–2.5974)	——
		65.975–66.025 (2.5974–2.5994)	——
		66.025–66.075 (2.5994–2.6014)	——
		66.075–66.125 (2.6014–2.6033)	——

Automatic Transmission (cont'd)—Section 14

Unit of length: mm (in)

	MEASUREMENT	STANDARD (NEW)	SERVICE LIMIT
Transmission (cont'd)	Mainshaft feed pipe O.D.	11.47–11.48 (0.4516–0.4520)	11.45 (0.451)
	Mainshaft feed pipe O.D.	5.97–5.98 (0.2350–0.2354)	5.95 (0.234)
	Countershaft feed pipe O.D.	11.47–11.48 (0.4516–0.4520)	11.45 (0.451)
	Countershaft feed pipe O.D.	7.97–7.98 (0.3138–0.3142)	7.95 (0.313)
	Mainshaft bushing I.D.	11.500–11.518 (0.4528–0.4535)	11.530 (0.4539)
	Mainshaft bushing I.D.	6.018–6.030 (0.2369–0.2374)	6.045 (0.2380)
	Countershaft bushing I.D.	11.500–11.518 (0.4528–0.4535)	11.530 (0.4539)
	Countershaft bushing I.D.	8.000–8.015 (0.3150–0.3156)	8.030 (0.3161)
	Diameter of needle bearing contact area		
	On mainshaft and stator shaft	22.980–22.993 (0.9047–0.9052)	Wear or damage
	On mainshaft 1st gear collar	32.975–32.991 (1.2982–1.2989)	
	On mainshaft 4th gear collar	33.975–33.991 (1.3376–1.3382)	
	On mainshaft 2nd collar	36.975–36.991 (1.4557–1.4563)	
	On countershaft (Fr side)	38.505–38.515 (1.5159–1.5163)	
	On countershaft 3rd gear distance collar	43.975–43.991 (1.7313–1.7319)	
	On countershaft 1st gear collar	33.975–33.991 (1.3376–1.3382)	
	On countershaft 4th gear	31.975–31.991 (1.2589–1.2595)	
	On countershaft reverse gear collar	32.975–32.991 (1.2982–1.2989)	
	On reverse idler gear shaft	13.990–14.000 (0.5508–0.5512)	
	Reverse idler gear shaft holder I.D.	14.416–14.434 (0.5676–0.5683)	
	Diameter of one-way clutch contact area		
	Countershaft 1st gear I.D.	83.339–83.365 (3.2811–3.2821)	
	Parking gear O.D.	66.685–66.696 (2.6254–2.6258)	
	Selector hub O.D.	51.87–51.90 (2.042–2.043)	
	Inside diameter		
	Mainshaft 1st gear	37.000–37.016 (1.4567–1.4573)	
	Mainshaft 2nd gear	43.000–43.016 (1.6929–1.6935)	
	Mainshaft 4th gear	40.000–40.016 (1.5748–1.5754)	
	Countershaft 1st gear	40.000–40.016 (1.5748–1.5754)	
	Countershaft 3rd gear	49.000–49.016 (1.9291–1.9298)	
	Countershaft 4th gear	38.000–38.016 (1.4961–1.4967)	
	Countershaft reverse gear	39.000–39.016 (1.5354–1.5361)	
	Reverse idler gear	18.007–18.020 (0.7089–0.7094)	Wear or damage
	End play		
	Mainshaft 1st gear	0.08–0.24 (0.003–0.009)	——
	Mainshaft 2nd gear	0.07–0.15 (0.003–0.006)	——
	Mainshaft 4th gear	0.10–0.22 (0.004–0.009)	——
	Countershaft 1st gear	0.10–0.41 (0.004–0.016)	——
	Countershaft 3rd gear	0.05–0.17 (0.002–0.007)	——
	Countershaft 4th gear	0.07–0.15 (0.003–0.006)	——
	Countershaft reverse gear	0.10–0.25 (0.004–0.010)	——
	Reverse idler gear	0.05–0.23 (0.002–0.009)	——
Secondary gear shaft taper roller bearing starting torque N·m (kg-cm, lb-in)		2.3–3.3 (23–33, 20–29)	——

(cont'd)

Standards and Service Limits

Automatic Transmission (cont'd)—Section 14

	MEASUREMENT	STANDARD (NEW)			
		Wire Dia.	O.D.	Free Length	No. of Coils
Springs	1st one-way ball spring	0.29 (0.011)	4.0 (0.157)	14.0 (0.551)	13.0
	Regulator valve spring A	1.8 (0.071)	14.7 (0.579)	88.6 (3.488)	16.5
	Regulator valve spring B	1.8 (0.071)	9.6 (0.378)	44.0 (1.732)	7.5
	Stator reaction spring	6.0 (0.236)	38.4 (1.512)	30.3 (1.193)	2.0
	Torque converter check valve spring	1.1 (0.043)	8.4 (0.331)	41.8 (1.646)	15.7
	Relief valve spring	1.1 (0.043)	8.4 (0.331)	41.8 (1.646)	15.7
	Cooler relief valve spring	1.1 (0.043)	8.4 (0.331)	46.8 (1.843)	17.0
	3-4 orifice control valve spring	0.7 (0.028)	6.6 (0.260)	34.8 (1.370)	22.0
	2-3 orifice control valve spring	0.7 (0.028)	6.6 (0.260)	39.1 (1.539)	22.0
	Throttle valve spring	1.0 (0.039)	7.6 (0.299)	28.3 (1.114)	12.1
	4th exhaust valve spring	0.6 (0.024)	5.6 (0.220)	49.1 (1.933)	21.0
	1-2 shift valve spring	0.9 (0.035)	8.6 (0.339)	40.4 (1.591)	14.5
	2-3 shift valve spring	0.9 (0.035)	9.6 (0.378)	43.0 (1.693)	12.1
	1st accumulator spring A	2.2 (0.087)	17.2 (0.677)	88.6 (3.488)	15.0
	1st accumulator spring B	1.9 (0.075)	19.8 (0.386)	51.5 (2.028)	8.3
	4th accumulator spring	3.3 (0.130)	20.5 (0.807)	74.1 (2.917)	11.2
	2nd accumulator spring	3.0 (0.118)	18.7 (0.736)	88.1 (3.468)	14.2
	1st-hold accumulator spring A	3.5 (0.138)	21.6 (0.850)	55.9 (2.201)	7.7
	3rd accumulator spring	3.2 (0.126)	20.5 (0.807)	89.0 (3.504)	12.6
	1st-hold accumulator spring B	2.3 (0.091)	12.8 (0.504)	53.4 (2.102)	12.6
	Lock-up shift valve spring	0.9 (0.035)	7.6 (0.299)	73.7 (2.902)	32.0
	Lock-up timing valve spring	0.8 (0.031)	6.6 (0.260)	59.3 (2.335)	38.8
	Servo control valve spring	1.0 (0.039)	8.1 (0.319)	52.1 (2.051)	20.8
	Lock-up control valve spring	0.7 (0.028)	6.6 (0.260)	38.0 (1.496)	14.1
	Modulator valve spring	1.4 (0.055)	9.4 (0.370)	32.4 (1.276)	10.5
	CPC valve spring	1.0 (0.039)	6.8 (0.268)	36.1 (1.421)	17.8
	4th kick-down spring	1.0 (0.039)	7.6 (0.299)	48.2 (1.898)	22.2
	3rd kick-down spring	1.0 (0.039)	7.4 (0.291)	38.6 (1.520)	16.0

Differential—Section 15

	MEASUREMENT	STANDARD (NEW)	SERVICE LIMIT
Differential oil	Capacity ℓ (US qt, Imp qt)	1.0 (1.11, 0.92) for overhaul 0.9 (1.00, 0.84) for oil change	
Differential carrier	Pinion shaft contact area I.D.	18.000–18.018 (15.8382–15.8540)	——
	Carrier-to-pinion shaft clearance	0.013–0.047 (0.0114–0.0019)	0.10 (0.004)
	Driveshaft or intermediate shaft contact area I.D.	30.025–30.045 (1.1821–1.1829)	——
	Carrier-to-driveshaft clearance	0.045–0.086 (0.0018–0.0034)	0.12 (0.005)
	Carrier-to-intermediate shaft clearance	0.080–0.116 (0.0031–0.0046)	0.15 (0.006)
Differential pinion gear	Backlash	0.05–0.15 (0.002–0.006)	0.30 (0.012)
	I.D.	18.042–18.066 (0.7103–0.7113)	——
	Pinion gear-to-pinion shaft clearance	0.055–0.095 (0.0022–0.0037)	0.15 (0.006)
Drive pinion and ring gear	Backlash at inspection hole	0.04–0.10 (0.002–0.004)	Adjust with a shim
	Backlash at gear circumference	0.06–0.14 (0.002–0.006)	
Drive pinion	Preload N·m (kg-cm, lb-in) New bearing	1.30–1.70 (13.0–17.0, 11.3–14.8)	Adjust with a shim
	Reused bearing	0.65–1.05 (6.5–10.5, 5.6–9.1)	
Total bearing preload	Preload N·m (kg-cm, lb-in)		
	New bearings	2.58–3.30 (25.8–33.0, 22.4–28.6)	Adjust with a shim
	Reused bearings	1.56–2.20 (15.6–22.0, 13.5–19.1)	
	Replace only the bearing on the ring gear side	1.93–2.65 (19.3–26.5, 16.8–23.0)	
	Replace only the bearing on the drive pinion side	2.21–2.85 (22.1–28.5, 19.2–24.7)	

Unit of length: mm (in)

Steering—Section 17

	MEASUREMENT	STANDARD (NEW)
Steering wheel	Play at steering wheel circumference	1–10 (0.04–0.4)
	Starting load at steering wheel circumference N (kg, lbs)	
	Engine running	32 (3.2, 5.1) max.
	When the hydraulic system to the speed sensor is cut off	50 (5.0, 11.0) min.
Gearbox	Angle of rack-guide-screw loosened from locked position	$20^{+5°}_{0}$
Pump	Pump pressure with valve closed (oil temp./speed: 105°F (40°C) min./idle. Do not run for more than 5 seconds). kPa (kg/cm², psi)	8,000–9,000 (80–90, 1,138–1,280)
Power steering fluid	Fluid capacity ℓ (US qt, Imp qt) System	1.8 (1.9, 1.6)
	Reservoir	0.5 (0.5, 0.4)
Power steering pump belt	Deflection with 100 N (10 kg, 22 lbs) between pulleys	6.5–9.0 (0.26–0.35) with used belt 4.5–6.5 (0.18–0.26) with new belt

Suspension—Section 18

	MEASUREMENT		STANDARD (NEW)	SERVICE LIMIT
Wheel alignment	Camber	Front	0° 00′ ± 1°	——
		Rear	−0° 30′ ± 1°	——
	Caster	Front	1° 38′ ± 1°	——
	Total toe	Front	0 ± 2.0 (0 ± 0.08)	——
		Rear	IN 3.0 ± 2.0 (0.12 ± 0.08)	——
	Front wheel turning angle	Inward wheel	39° 24′ ±2°	——
		Outward wheel	33° 36′	——
Wheel	Rim runout (Steel wheel)	Axial	0–1.0 (0–0.04)	2.0 (0.08)
		Radial	0–1.0 (0–0.04)	1.5 (0.06)
	Rim runout (Aluminum wheel)	Axial	0–0.7 (0–0.03)	2.0 (0.08)
		Radial	0–0.7 (0–0.03)	1.5 (0.06)
Wheel	End play	Front	0–0.05 (0–0.002)	——
		Rear	0–0.05 (0–0.002)	——

Brakes—Section 19

	MEASUREMENT		STANDARD (NEW)	SERVICE LIMIT
Parking brake lever	Play in stroke at 200 N (20 kg, 44 lbs) lever force		To be locked when pulled 7–11 notches	——
Foot brake pedal	Pedal height (with floor mat removed)	A/T	199 (7.8) min.	——
		M/T	194 (7.6) min.	——
	Free play		1–5 (1/16–13/64)	——
Master cylinder	Piston-to-pushrod clearance		0–0.4 (0–0.02)	——
Disc brake	Disc thickness	Front	23.0 (0.91)	21.0 (0.83)
		Rear	10.0 (0.39)	8.0 (0.31)
	Disc runout	Front	——	0.10 (0.004)
		Rear	——	0.10 (0.004)
	Disc parallelism	Front and rear	——	0.015 (0.0006)
	Pad thickness	Front	11.0 (0.43)	1.6 (0.06)
		Rear	9.0 (0.35)	1.6 (0.06)

Standards and Service Limits

Air Conditioning—Section 22

Unit of length: mm (in)

	MEASUREMENT		STANDARD (NEW)
Air conditioning system	Lubricant capacity cc (US oz, Imp oz)	Condenser	20 (0.68, 0.70)
		Evaporator	30 (1.01, 1.06)
		Line or hose	10 (0.34, 0.35)
		Receiver	10 (0.34, 0.35)
Compressor	Lubricant capacity cc (US oz, Imp oz)		130–160 (4.40–5.41 4.58–5.63)
	Stator coil resistance at 68°F (20°C) Ω		3.4–3.8
	Pulley-to-pressure plate clearance		0.35–0.65 (0.014–0.026)
Compressor belt	Deflection with 100 N (10 kg, 22 lbs) between pulleys		6.0–9.0 (0.24–0.35) with used belt 3.5–5.5 (0.14–0.22) with new belt

Electrical—Section 23

	MEASUREMENT	STANDARD (NEW)	SERVICE LIMIT
Ignition coil	Rated votage V	12	
	Primary winding resistance Ω at 77°F (25°C)	0.3–0.5	
	Secondary winding resistance kΩ at 77°F (25°C)	10.8–16.2	
Spark plug	Type	See Section 23	
	Gap	1.1 (0.43)	
Ignition timing	At idling °BTDC	15° ± 2° (Red)	
Alternator belt	Deflection with 100 N (10 kg, 22 lbs) between pulleys	7.5–9.5 (0.30–0.37) with used belt 5.0–7.0 (0.20–0.28) with new belt	
Alternator (NIPPON-DENSO)	Output 13.5 V at hot A	100	——
	Brush length	10.5 (0.41)	1.5 (0.06)
Starter motor (MITSUBA 1.6 kW)	Type	Spur gear reduction, Permanent magnet	
	Mica depth	0.4–0.5 (0.016–0.020)	0.15 (0.006)
	Commutator runout	0–0.02 (0–0.001)	0.05 (0.002)
	Commutator O.D.	28.0–28.1 (1.102–1.106)	27.5 (1.083)
	Brush length	15.8–16.2 (0.62–0.64)	11.0 (0.43)
	Brush spring tension (new) N (kg, lbs)	16.0–18.0 (1.60–1.80, 3.53–3.93)	——
Starter motor (MITSUBA 2.0 kW)	Type	Planetary gear reduction, Permanent magnet	
	Mica depth	0.4–0.5 (0.016–0.020)	0.15 (0.006)
	Commutator runout	0–0.02 (0–0.001)	0.05 (0.002)
	Commutator O.D.	32.0–32.1 (1.260–1.264)	31.5 (1.240)
	Brush length	16.8–17.2 (0.66–0.68)	11.0 (0.43)
	Brush spring tension (new) N (kg, lbs)	17.0–19.0 (1.70–1.90, 3.75–4.19)	——
Starter motor (MITSUBISHI 2.0 kW)	Type	Planetary gear reduction, Field coil	
	Mica depth	0.5–0.8 (0.020–0.031)	0.20 (0.008)
	Commutator runout	0–0.05 (0–0.002)	0.10 (0.004)
	Commutator O.D.	31.9–32.1 (1.256–1.264)	31.5 (1.240)
	Brush length	18.0 (0.71)	11.0 (0.43)
	Brush spring tension (new) N (kg, lbs)	29.7–36.3 (2.97–3.63, 6.55–8.00)	——

Design Specifications

	ITEM		METRIC	ENGLISH	NOTES
Dimentions	Overall Length		4,835 mm	190.4 in	
	Overall Width		1,780 mm	70.1 in	
	Overall Height		1,370 mm	53.9 in	
	Wheelbase		2,805 mm	110.4 in	
	Track Front/Rear		1,520/1,510 mm	59.8/59.4 in	
	Ground Clearance		150 mm	5.9 in	
	Seating Capacity		Five		
Weight (USA)	Gross Vehicle Weight Rating (GVWR)		1,925 kg	4,245 lbs	
Weight (CANADA)	Gross Vehicle Weight Rating (GVWR)		1,925 kg	4,245 lbs	
ENGINE	Type		Water-cooled, 4-stroke SOHC gasoline engine		
	Cylinder Arrangement		Inline 5-cylinder 30° slant mount		
	Bore and Stroke		85.0 x 86.4 mm	3.35 x 3.40 in	
	Displacement		2,451 cm³ (cc)	149 cu-in	
	Compression Ratio		9.0		
	Valve Train		Belt driven, SOHC 4 valves per cylinder		
	Lubrication System		Forced and wet sump, trochoid pump		
	Fuel Required		Premium UNLEADED grade gasoline with 91 Pump Octane Number or higher		
STARTER	Make/Type		MITSUBA/Spur gear reduction, permanent magnet 1.6 kW and Planetary gear reduction, permanent magnet 2.0 kW MITSUBISHI/Planetary gear reduction, field coil 2.0 kW		
	Normal Output		M/T: 1.6 kW A/T: 2.0 kW		
	Nominal Voltage		12 V		
	Hour Rating		30 seconds		
	Direction of Rotation		Counterclockwise as viewed from gear end		
	Weight		Approximate 4.7 kg	10.4 lbs	
CLUTCH	Clutch Type	M/T	Single plate dry, diaphragm spring		
		A/T	Torque converter		
	Clutch Facing Area	M/T	239 cm²	37 sq-in	
TRANSMISSION	Transmission	M/T	Synchronized 5-speed forward, 1 reverse		
		A/T	Electronically controlled 4-speed automatic, 1 reverse		
	Primary Reduction		Direct 1 : 1		
	Type		Manual	Automatic	
	Gear Ratio	1st	3.071	2.647	
		2nd	1.652	1.535	
		3rd	1.156	0.975	
		4th	0.864	0.653	
		5th	0.666	—	
		Reverse	3.075	1.904	
	Secondary Reduction	Gear type	Single helical gear		
		Gear ratio	1.625	1.621	
	Final Reduction	Gear type	Hypoid spiral bevel gear		
		Gear ratio	2.764	2.764	

(cont'd)

Design Specifications

(cont'd)

	ITEM		METRIC	ENGLISH	NOTES
AIR CONDITIONING	Cooling Capacity		4.320 Kcal/h	17,142 BTU/h	
	Conditions:				
	Engine Speed		1,800 rpm		
	Outside Air Temperature		27°C	81°F	
	Outside Air Humidity		50%		
	Condenser Air Temperature		35°C	95°F	
	Condenser Air Velocity		4.5 m/sec	14.8 ft/sec	
	Blower Capacity		500 m³/h	17,660 cu ft/h	at 12 V
	Compressor	Type/Makes	Swash-plate type/NIPPONDENSO		
		No. of Cylinder	10		
		Capacity	177.7 cc/rev	10.84 cu-in/rev	
		Max. Speed	8,800 rpm		
		Lubricant Capacity	140 cc	4.73 US oz, 4.93 Imp oz	
	Condensor	Type	Corrugated fin type		
	Evaporator	Type	Corrugated fin type		
	Blower	Type	Sirocco fan		
		Motor Input	200 W/12 V		
		Speed Control	Infinately variable		
		Max. Capacity	500 m³/h min.	17,660 cu-ft/h min.	at 12 V
	Temp. Control		Air-mix type		
	Comp. Clutch	Type	Dry, single plate, Poly-V-belt drive		
		Power Consumption	40 W max./12 V		
	Refrigerant	Type	R 12		
		Quantity	800^{+50}_{0} g	$26.5^{+1.8}_{0}$ oz	
STEERING SYSTEM	Type		Power assisted, rack and pinon		
	Overall Ratio		17.34		
	Turns, Lock-to-Lock		3.52		
	Steering Wheel Dia.		380 mm	15.0 in	
SUSPENSION	Type, Front		Independent double wishbone, coil spring with stabilizer		
	Type, Rear		Independent double wishbone, coil spring with stabilizer		
	Shock Absorber, Front and Rear		Telescopic, hydraulic nitrogen gas-filled		

	ITEM		METRIC	ENGLISH	NOTES
WHEEL ALIGNMENT	Camber	Front	0°00′		
		Rear	-0°30′		
	Caster		1°38′		
	Toe	Front	0 mm	0 in	
		Rear	In 3.0 mm	In 0.12 in	
BRAKE SYSTEM	Type	Front	Power-assisted self-adjusting ventilated disc		
		Rear	Power-assisted self-adjusting solid disc		
	Pad Surface Area:	Front	58.0 cm² x 2	8.99 sq-in x 2	
		Rear	27.9 cm² x 2	4.32 sq-in x 2	
	Parking Brake Kind and Type		Mechanical actuating, rear two wheel brakes		
TIRE	Size		205/60 R 15 91 H T135/80 D 15 (Spare tire)		
ELECTRICAL	Battery		12 V–52 AH/5 HR		
	Starter		M/T: 12 V–1.6 kW, A/T: 12 V–2.0 kW		
	Alternator		12 V–100 A		
	Fuses				
	In The Under-dash Fuse/Relay Box		7.5 A, 10 A, 15 A, 20 A, 30 A		
	In The Under-hood Fuse/Relay Box		7.5 A, 10 A, 15 A, 20 A, 30 A, 40 A, 50 A, 120 A		
	Headlights	High	12 V–65 W		
		Low	12 V–55 W		
	Front Turn Signal Lights		12 V–45 CP		
	Front Parking Lights		12 V–3 CP		
	Rear Turn Signal Lights		12 V–45 CP		
	Brake/Taillights (and Rear Side Marker Lights)		12 V–32/2 CP		
	Front Fog Lights		12 V–35 W		
	High Mount Brake Light		12 V–45 CP		
	Front Side Marker Lights		12 V–5 W		
	Back-up Lights		12 V–32 W		
	License Plate Light		12 V–8 W		
	Dome Lights (front and rear reading lights)		12 V–5 W		
	Trunk Light		12 V–3.4 W		
	Door Courtesy Lights		12 V–3.4 W		
	Vanity mirror light		12–2 W		
	Gauge Lights		12 V–3.0 W, 1.4 W, 1.7 W		
	Indicator Lights		12 V–0.84 W, 1.12 W, 1.4 W, 2.0 W		
	Warning Lights		12 V–1.4 W		
	Illumination and Pilot Lights		12 V–1.4 W, 1.12 W, 0.84 W 12 V–0.91 W, 0.56 W, LED		
	Heater Illumination Lights		12 V–1.4 W		

Body Specifications

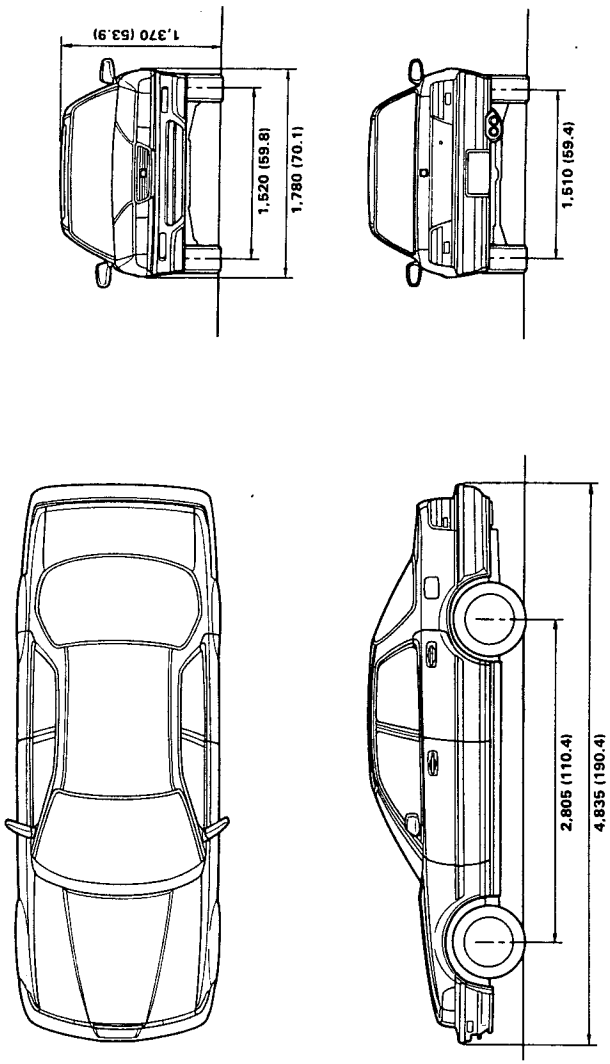

Maintenance

Lubrication Points 4-2
Maintenance Schedule 4-4

Maintenance

Lubrication Points 4-2
Maintenance Schedule 4-4

Lubrication Points

For the details of lubrication points and types of lubricants to be applied, refer to the Illustrated Index and various work procedures (such as Assembly/Reassembly, Replacement, Overhaul, Installation, etc.) contained in each section.

No.	LUBRICATION POINTS	LUBRICANT
1	Engine	API Service Grade: Use "Energy Conserving II" SG grade oil 5 W–30 preferred SAE Viscosity: See chart below.
2	Transmission Manual Automatic	API Service Grade: SF or SG SAE Viscosity: 10 W–30 or 10 W–40 Honda Premium Formula Automatic Transmission Fluid or an equivalent DEXRON® II Automatic Transmission Fluid (ATF)
3	Brake Line	Brake fluid DOT3 or DOT4
4	Clutch Line	Brake fluid DOT3 or DOT4
5	Power steering gearbox	Steering grease P/N 08733–B070E
6	Shift lever pivots (Manual transmission)	Grease with molybdenum disulfide
7 8 9 10 11 12 13 14 15 16 17 18 19 20	Release fork (Manual transmission) Steering boots Throttle cable end Steering ball joints Select lever (Automatic transmission) Pedal linkage Intermediate shaft Brake master cylinder pushrod Trunk hinges Door hinges upper and lower Door opening detents Fuel fill lid Engine hood hinges and engine hood latch Clutch master cylinder pushrod	Multi-purpose grease
21	Brake pipe joint (Front and rear wheel house)	Rust preventives
22	Caliper Piston seal, Dust seal, Caliper pin, Piston	Silicone grease
23	Power steering system	Honda power steering fluid-V
24	Differential	Hypoid gear Oil GL4 or GL5 Viscosity: at above –18°C (0°F): SAE 90 at less than –18°C (0°F): SAE 80 W 90

Recommended Engine Oil
API Service Grade: Use "Energy Conserving II"
SG grade oil 5 W–30 preferred

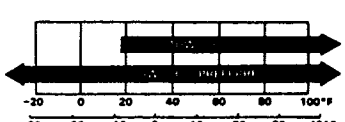

Engine oil viscosity for ambient temperature ranges

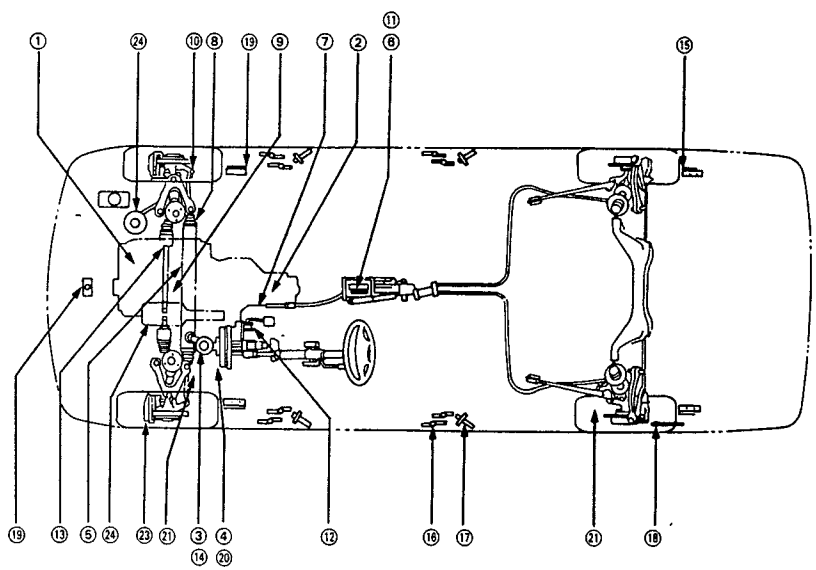

R—Replace I—Inspect After inspection, clean, adjust, repair or replace if necessary.

Service at the interval listed x 1,000 miles (or km) or after that number of months, whichever comes first.															NOTE	SEC and PAGE
	x 1,000 miles	7.5	15	22.5	30	37.5	45	52.5	60	67.5	75	82.5	90	97.5	105		
	x 1,000 km	12	24	36	48	60	72	84	96	108	120	132	144	156	168		
Maintenance item	months	6	12	18	24	30	36	42	48	54	60	66	72	78	84		
Engine and Transmission																	
□ Air cleaner element					R				R				R✓				11-127
Idle speed									I*1							Manual transmission: 700 ± 50 rpm (in neutral) Automatic transmission: 700 ± 50 rpm (in N or P position)	11-106
Positive crankcase ventilation valve									I							If clicking sound is heard as you pinch the hose between the PCV valve and intake manifold, valve is OK.	11-147
Fuel filter									R*1				✓			The rubber fuel hoses need periodic replacement since they are subject to cracks and deterioration during a long period of use.	11-117
Fuel pipes, hoses, and connections					I*1				I*1				I*1			Check fuel lines for loose connections, cracks and deteriorations. Retighten loose connections and replace any damaged parts.	11-4
Spark plugs					R				R				R✓			NGK: BKR5E-N11, NIPPONDENSO: K16PR-L11 Gap: 1.0—1.1 mm (0.039—0.043 in)	23-108
Distributor ignition cap and rotor									I*1								23-103
Ignition wires									I								23-106
● Engine oil		R	R	R	R	R	R	R	R	R	R	R	R✓	R	R	Capacity for change with filter: 4.3 ℓ (4.5 US qt, 3.8 Imp qt)	8-4
● Engine oil filter		R	R	R	R	R	R	R	R	R	R	R	R✓	R	R		8-5
Alternator drive belt					I				I				I✓			7.5—9.5 mm (0.30—0.37 in) @ 100 N (10 kg, 22 lbs) tension	23-121
Cooling system hoses and connections					I*1				I*1				I*1				10-2
Valve Clearance			I		I		I		I		I		I		I		6-33

●: Check oil and coolant level at each fuel stop.
□: Under severe driving conditions, service these items more often.

*1: For cars sold in California, this service is recommended only; other areas, it is required.

R—Replace I—Inspect After inspection, clean, adjust, repair or replace if necessary.

Service at the interval listed x 1,000 miles (or km) or after that number of months, whichever comes first.															NOTE	SEC and PAGE
	x 1,000 miles	7.5	15	22.5	30	37.5	45	52.5	60	67.5	75	82.5	90	97.5	105		
	x 1,000 km	12	24	36	48	60	72	84	96	108	120	132	144	156	168		
Maintenance item	months	6	12	18	24	30	36	42	48	54	60	66	72	78	84		
Engine and Transmission																	
● Engine coolant							R				R		✓		R*2	Capacity for change: Manual transmission: 6.0 ℓ (6.3 US qt, 5.3 Imp qt) Automatic transmission: 5.9 ℓ (6.2 US qt, 5.2 Imp qt) Check specific gravity for freezing point	10-5
Timing belt													R*3✓				6-28, 30
Water pump													I✓				10-9
Three way catalytic converter heat shield									I							Check condition and tightness	11-140
Exhaust pipe (before catalytic converter)					I*1				I*1				I*1			Check condition and tightness	9-4
Exhaust pipe and muffler (after catalytic converter)			I		I		I		I		I		I		I	Check condition and tightness	9-4
□ Manual transmission oil					R				R				R			1.8 ℓ (1.9 US qt, 1.6 Imp qt) for change	13-3
□ Automatic transmission fluid					R				R				R✓			2.5 ℓ (2.6 US qt, 2.2 Imp qt) for change HONDA Premium Formula ATF or DEXRON® II ATF	14-91
□ Front differential oil					R				R				R✓			0.95 ℓ (1.00 US qt, 0.84 Imp qt) for change Hypoid gear oil classified GL4 or GL5	15-4
Brakes																	
Front brake pads		I	I	I	I	I	I	I	I	I	I	I	I	I	I	Min. thickness: 1.6 mm (0.06 in)	19-6
□ Front brake discs and calipers			I		I		I		I		I		I		I	Min. thickness: 21 mm (0.83 in)	19-9
□ Rear brake discs, calipers and pads			I		I		I		I		I		I		I	Min. thickness: Discs 8.0 mm (0.32 in) : Pads 1.6 mm (0.06 in)	19-21 19-19
Brake hoses and lines (Including Anti-lock brake system)			I		I		I		I		I		I		I	Check for leaks, damage, interference or twisting.	19-27
Parking brake			I		I				I				I			Fully engaged: 7 to 11 clicks.	19-4
Brake fluid (Including Anti-lock brake system)					R				R				✓ R			Use only DOT3 or DOT4 fluid. Check that brake fluid level is between the upper and lower marks on the reservoir.	19-10

●: Check oil and coolant level at each fuel stop.
□: Under severe driving conditions, service these items more often.

*1: The cars sold in California, this service is recommended only; other areas, it is required.
*2: Thereafter, replace every 2 years or 30,000 miles (48,000 km), whichever comes first.
*3: This service is recommended only.

R—Replace I—Inspect After inspection, clean, adjust, repair or replace if necessary.

Service at the interval listed x 1,000 miles (or km) or after that number of months, whichever comes first.																	
	x 1,000 miles	7.5	15	22.5	30	37.5	45	52.5	60	67.5	75	82.5	90	97.5	105	NOTE	SEC and PAGE
	x 1,000 km	12	24	36	48	60	72	84	96	108	120	132	144	156	168		
Maintenance item	months	6	12	18	24	30	36	42	48	54	60	66	72	78	84		
Brakes																	
Anti-lock brake system operation					I				I				I			Function test Wheel sensor signal confirmation Anti-lock brake system indicator light	19-3
Anti-lock brake system high pressure hose									R							Bleed high pressure fluid	19-71
Steering, Suspension, Miscellaneous																	
Front wheel alignment			I		I		I		I		I		I		I		18-4
Steering operation, tie rod ends, steering gearbox and boots			I		I				I				I			Check rack grease and steering linkage. Check the boot for damage or leaking grease.	17-3
□ Power steering system			[I]		[I]		[I]		[I]		[I]		[I]		[I]		17-20
Power steering pump belt					I				I				I			6.5–9.0 mm (0.26–0.35 in) @ 100 N (10 kg, 22 lbs) tension	17-17
Suspension mounting bolts			I		I		I		I		I		I		I	Check tightness of bolts.	18-8, 22
Supplemental restraint system	Inspect system 10 years after production																–

□: Under severe driving conditions, service these items more often.

Severe Driving Conditions
Items with an [R] or [I] need service more often if you drive in some severe conditions.

A: Repeated short distance driving
B: Dusty conditions
C: Severe cold weather
D: Areas with road salt or other corrosive materials
E: Rough or muddy roads
F: Towing a trailer

Services for Severe Driving Conditions
- Clean the air cleaner element every 15,000 miles (24,000 km) or 12 months and replace every 30,000 miles (48,000 km) or 24 months under condition B or E.
- Replace engine oil and oil filter every 3,750 miles (6,000 km) or 3 months under condition A, B or F.
- Replace tranmsission oil every 15,000 miles (24,000 km) or 12 months under condition F.
- Replace front differential oil every 15,000 miles (24,000 km) or 12 months under condition F.
- Inspect front brake discs and calipers, and rear brake discs, calipers and pads every 7,500 miles (12,000 km) or 6 months under condition A, B, D, E or F.
- Inspect the power steering system every 7,500 miles (12,000 km) or 6 months under condition B, C or E.

Engine Removal/Installation

Engine

Engine Removal/Installation..... 5-1
Cylinder Head/Valve Train..... 6-1
Engine Block..... 7-1
Engine Lubrication..... 8-1
Intake Manifold/Exhaust System..... 9-1
Cooling..... 10-1

Special Tools

Ref. No.	Tool Number	Description	Qty	Page Reference
①	07LAC–PW50101	Extension Shaft Puller	1	5-7

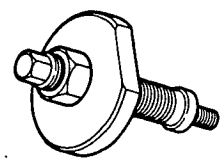

①

Engine Removal/Installation

⚠WARNING
- **Make sure jacks and safety stands are placed properly and hoist brackets are attached to the correct positions on the engine (see section 1).**
- **Make sure the car will not roll off stands and fall while you are working under it.**

CAUTION:
- **Use fender covers to avoid damaging painted surfaces.**
- **Unspecified items are common.**
- **Unplug the wiring connectors carefully while holding the coupler and the connector portion to avoid damage.**
- **Mark all wiring and hoses to avoid mis-connection. Also, be sure that they do not contact other wiring or hoses or interfere with other parts.**

NOTE: Anti-theft radios have a coded theft protection circuit. Be sure to get the customer's code number before
– Disconnecting the battery.
– Removing the No. 39 (10 A) fuse in the under-hood fuse/relay box.
– Removing the radio.
After service, reconnect power to the radio and turn it on.
When the word "CODE" is displayed, enter the customer's 5-digit code to restore radio operation.

1. Disconnect the battery negative terminal first, then the positive terminal.

2. Remove the radiator cap.

   ⚠WARNING Use care when removing the radiator cap to avoid scalding by hot engine coolant or steam.

3. Raise the hoist to full height.

4. Remove the engine splash shield.

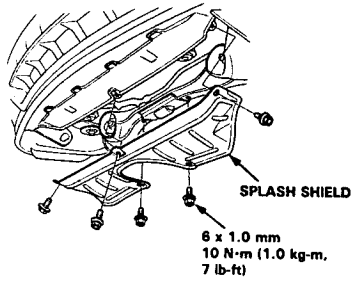

5. Drain the engine coolant (page 10-5).
   - Loosen the drain plug in the radiator.

6. Drain transmission and differential oil/fluid. Reinstall the drain plugs using new washers.

7. Drain the engine oil. Reinstall the drain bolt using a new washer.

   CAUTION: Do not overtighten the drain bolt.

8. Lower the hoist.

9. Secure the hood as far open as possible.

10. Remove the ignition coil wire, condenser wire and engine ground cable.

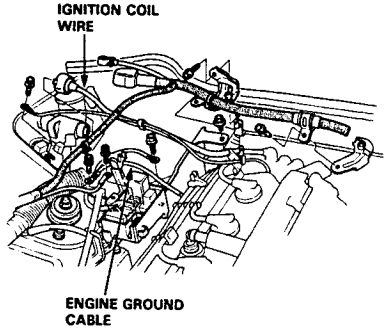

11. Remove the ABS motor relay box and the battery heat shield, then remove the battery.

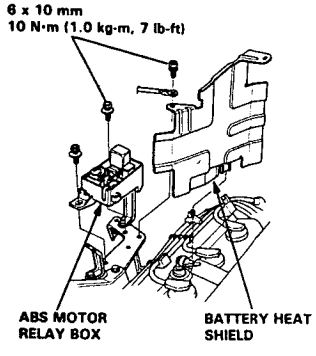

(cont'd)

12. Remove the intake air duct and the air cleaner (ACL) housing.

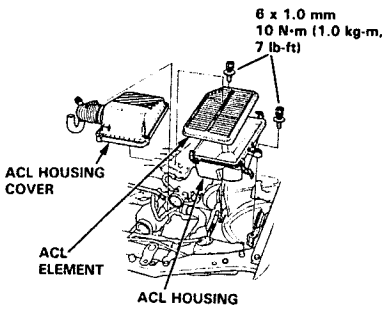

13. Relieve fuel pressure by slowly loosening the service bolt on the fuel filter about one turn (see section 11).

⚠WARNING Do not smoke while working on the fuel system. Keep open flame away from work area. Drain fuel only into an approved container.

CAUTION:
- **Before disconnecting any fuel line, relieve the fuel pressure as described above.**
- **Place a shop towel over the fuel filter to prevent pressurized fuel from spraying over the engine.**

14. Remove the fuel feed hose from the fuel filter and the fuel return hose from the fuel pressure regulator (see section 11).

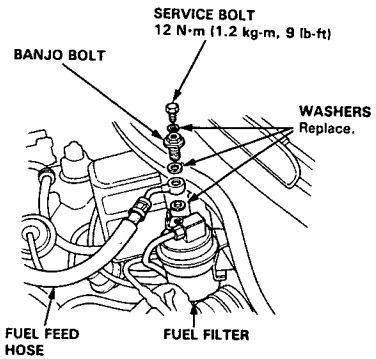

15. Remove the throttle cable by loosening the locknut, then slip the cable end out of the accelerator linkage.

NOTE:
- Take care not to bend the cable when removing it. Always replace any kinked cable with a new one.
- Adjust the throttle cable when installing (see section 11).

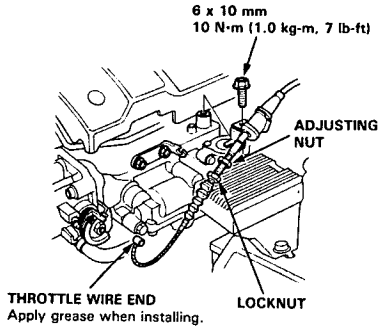

16. Remove the throttle cable clamp and the injector resistor connector.

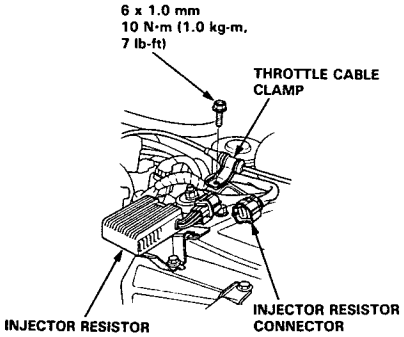

17. Remove the engine wire harness connectors and clamps.

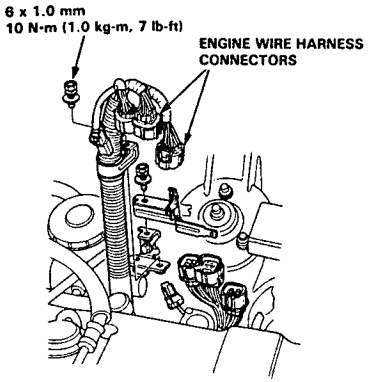

18. Remove the fuel return hose, the evaporative emission (EVAP) control canister hoses, the emission vacuum hose and the brake booster vacuum hose.

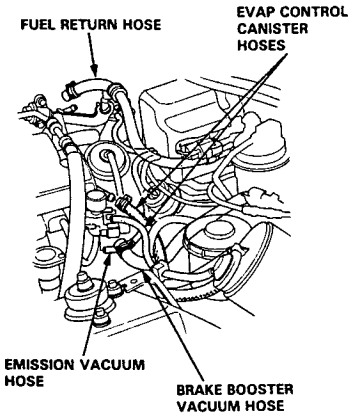

19. Remove the heater hoses and disconnect the transmission sub-wire harness connector (A/T) or back-up light switch connector (M/T).

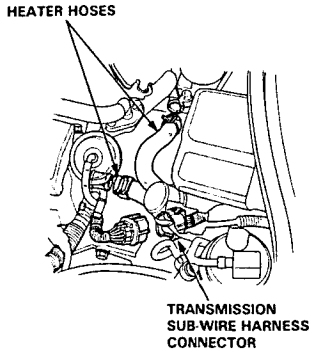

20. Disconnect the ignition wires, then remove the distributor.

NOTE: When installing the distributor, first install the collar on the distributor.

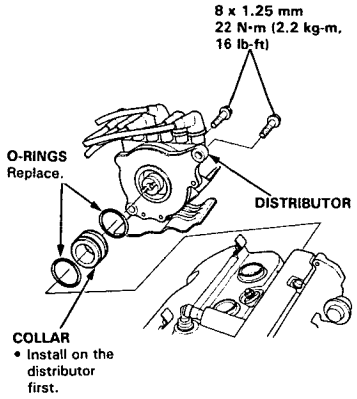

(cont'd)

21. Remove the engine wire harness from the underhood fuse/relay box, then remove the transmission ground cable.

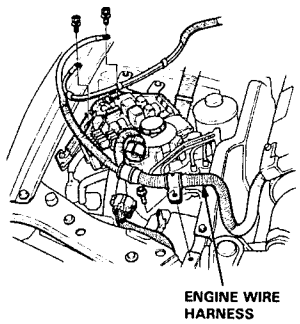

22. Loosen the adjusting bolt, then remove the mounting bolt/nut, the power steering (P/S) pump belt and pump.

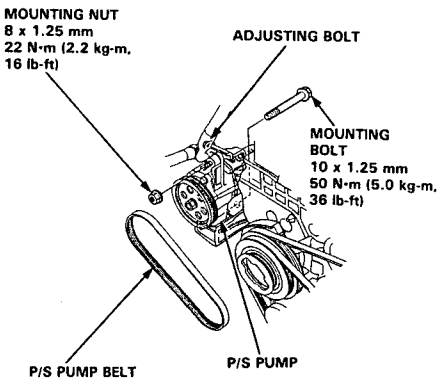

23. Loosen the idler pulley center nut and adjusting bolt, then remove the air conditioning (A/C) compressor belt and compressor.
    - Do not disconnect the hoses.
    - Disconnect the connector.

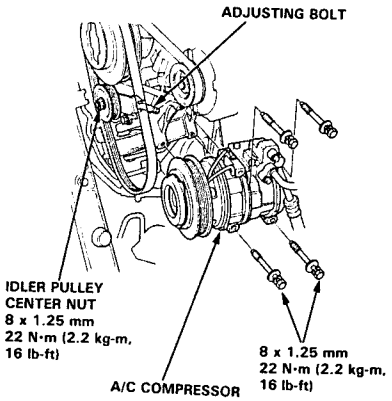

24. Remove the vehicle speed sensor (VSS)/power steering speed sensor.
    - Do not disconnect the fluid hoses.

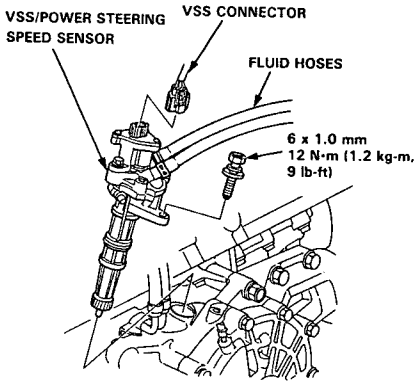

25. Remove the radiator.
    - Disconnect the connectors and automatic transmission fluid (ATF) cooler hoses.

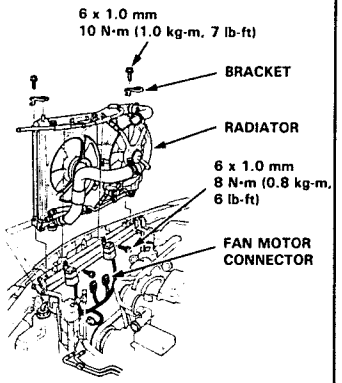

26. Remove the torque converter cover (A/T). Remove the drive plate bolts one at a time while rotating the crankshaft pulley.

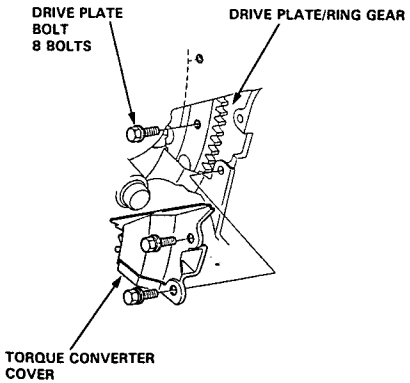

27. Remove the transmission housing mounting bolts and the 26 mm shim.

28. Remove the transmission sub-harness connector.

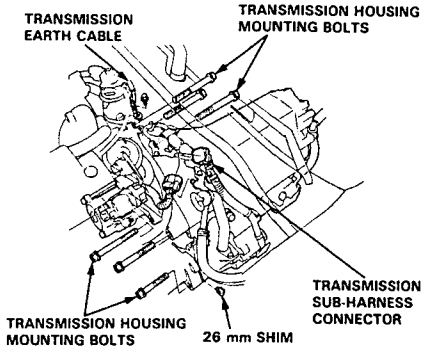

29. Remove the damper forks.

30. Disconnect the suspension lower arm ball joints with the special tool. Refer to section 18 for the proper procedure.

31. Remove the driveshafts.

NOTE:
- Coat all precision finished surfaces with clean engine oil or grease.
- Tie plastic bags over the driveshaft ends.

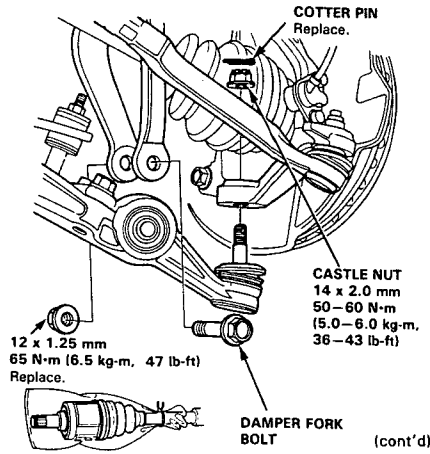

(cont'd)

32. Raise the hoist.

33. Remove the exhaust pipe A.

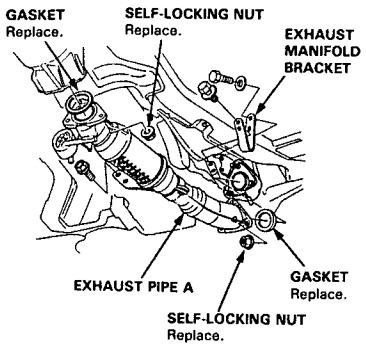

34. Remove the transmission mount and mount bracket.

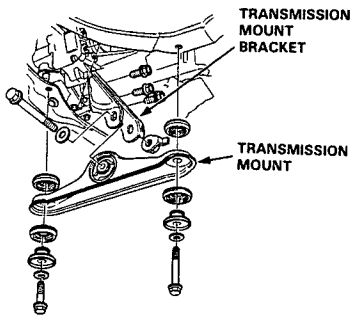

35. Shift the manual transmission to 1st gear or automatic transmission to [P] position.

36. Remove the secondary cover and 33 mm sealing bolt.

37. Remove the extension shaft from the differential using the special tool as shown.

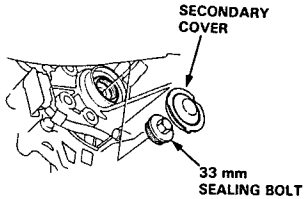

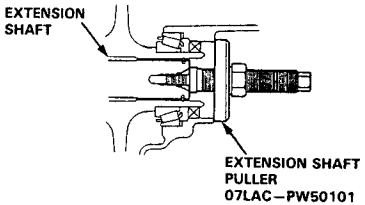

38. Attach a chain hoist to the engine.

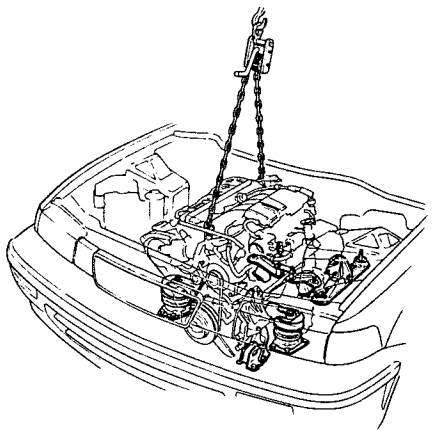

39. Remove the left front engine mount nut and engine mount damper bolt.

40. Remove the right front engine mount nut.

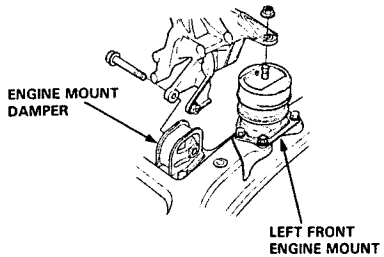

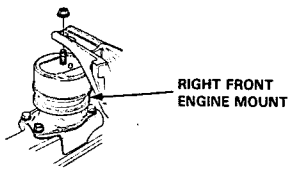

41. Remove the mid mounts.

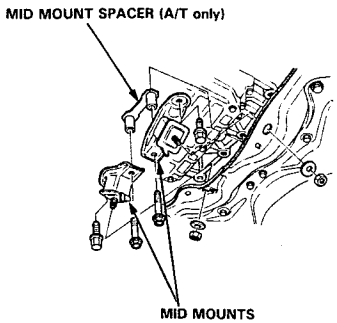

42. Remove the transmission housing mounting bolts and clutch cover (M/T) or torque converter cover (A/T), then separate the engine and the transmission.
    - Attach the transmission jack with a rubber pad or wooden block.

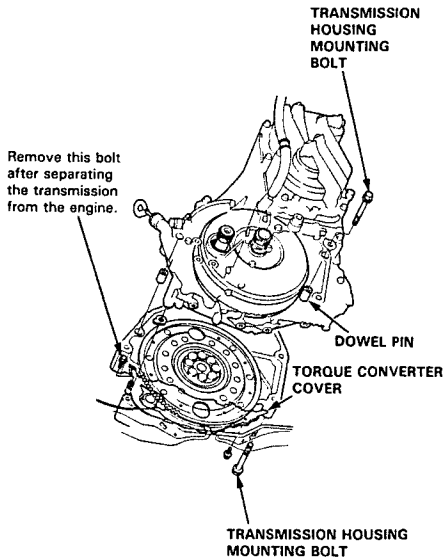

43. Install the mid mounts to the transmission and retorque the mounting bolts.

44. Raise the chain hoist to remove all slack from the chain.

45. Check that the engine is completely free of vacuum hoses, fuel and coolant hoses, and electrical wiring.

46. Slowly raise the engine approximately 150 mm (6 in).
    Check once again that all hoses and wires have been disconnected from the engine.

47. Raise the engine all the way and remove it from the car.

(cont'd)

Engine Removal/Installation

(cont'd)

48. Install the engine in the reverse order of removal.

NOTE:
- If engine block and/or differential case are replaced, the 26 mm shim thickness must be adjusted (see section 15).
- Fill the opening of the drive pinion and extension shaft with Super High Temp Urea Grease (P/N 08798–9002) and apply the same grease to the splines before installing the transmission (see section 13 (M/T) and 14 (A/T)).
- After service, reconnect power to the radio and turn it on, the word "CODE" will be displayed. Enter the customer's 5-digit code to restore radio operation.

After the engine is in place:
- Torque the engine mount bolts and nuts in sequence shown below.

CAUTION: Failure to tighten the bolts in the proper sequence can cause excessive noise and vibration, and reduce bushing life; check that the bushings are not twisted or offset.

- Check that the spring clip on the end of each driveshaft clicks into place.

CAUTION: Use new spring clips.

- Bleed air from the cooling system at the bleed bolt with the heater valve open.
- Adjust the throttle cable tension.
- Check the clutch pedal freeplay.
- Check that the transmission shifts into gear smoothly.
- Adjust the tension of the following drive belts:
  Alternator belt (see section 23).
  Power steering pump belt (see section 17).
  A/C compressor belt (see section 22).
- Clean battery posts and cable terminals with sandpaper, assemble, then apply grease to prevent corrosion.
- Inspect for fuel leakage.
  - After assembling fuel line parts, turn on the ignition switch (Do not operate the starter) so that the fuel pump operates for approximately two seconds and the fuel line is pressurized. Repeat this operation two or three times and check for fuel leakage at any point in the fuel line.

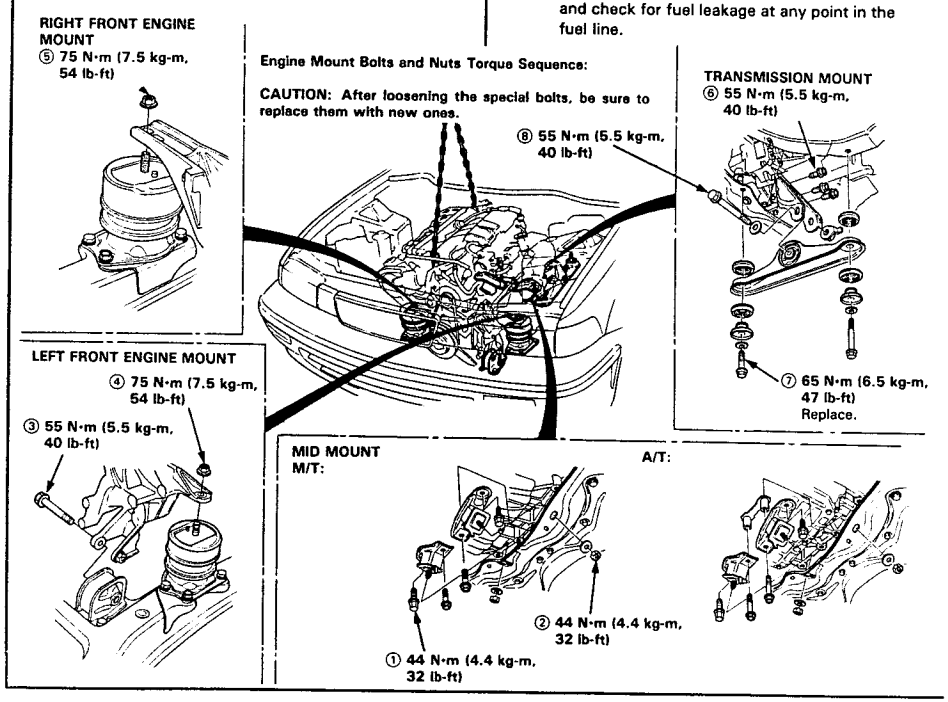

Mount and Bracket Bolts/Nuts Torque Value Specifications:

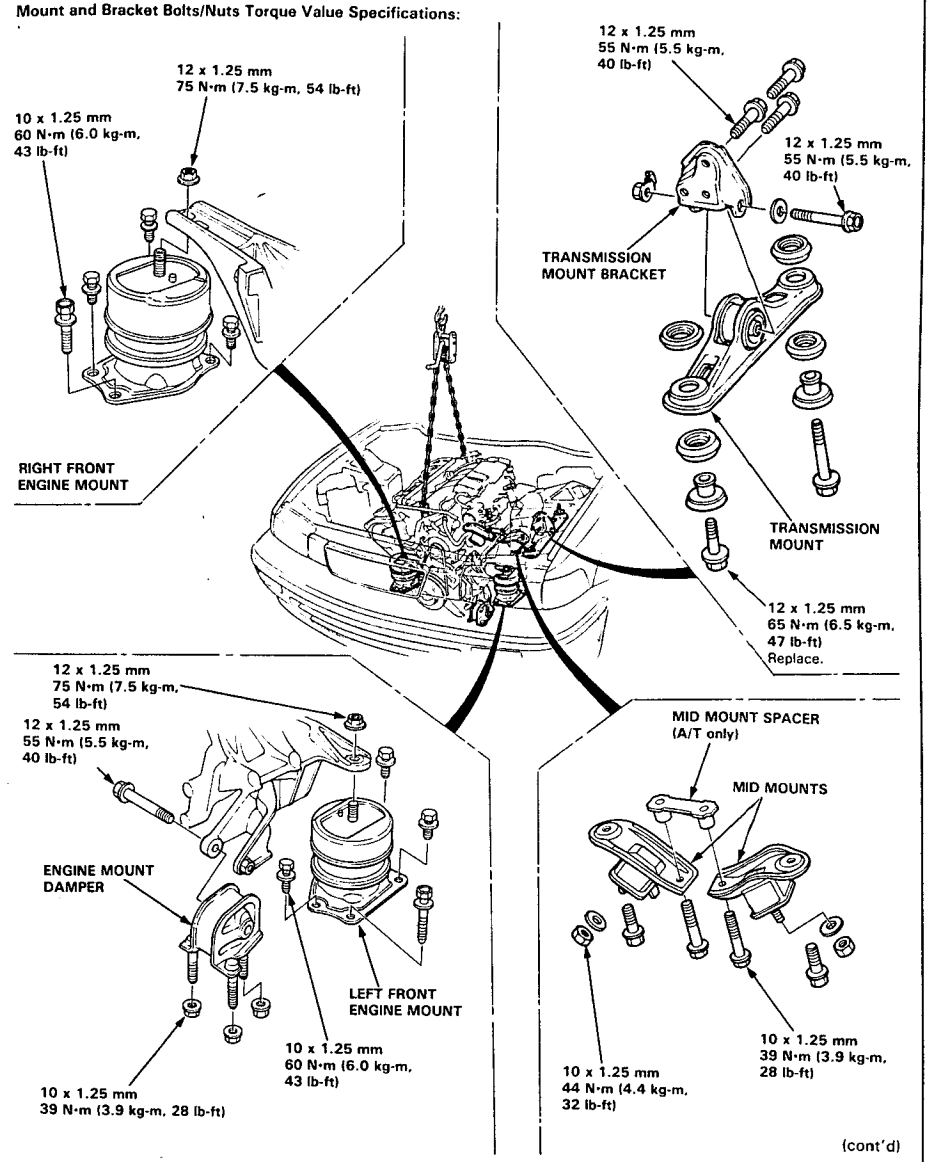

(cont'd)

Engine Removal/Installation

(cont'd)

Additional Torque Value Specifications:

NOTE: For manifold replacement, refer to section 9.

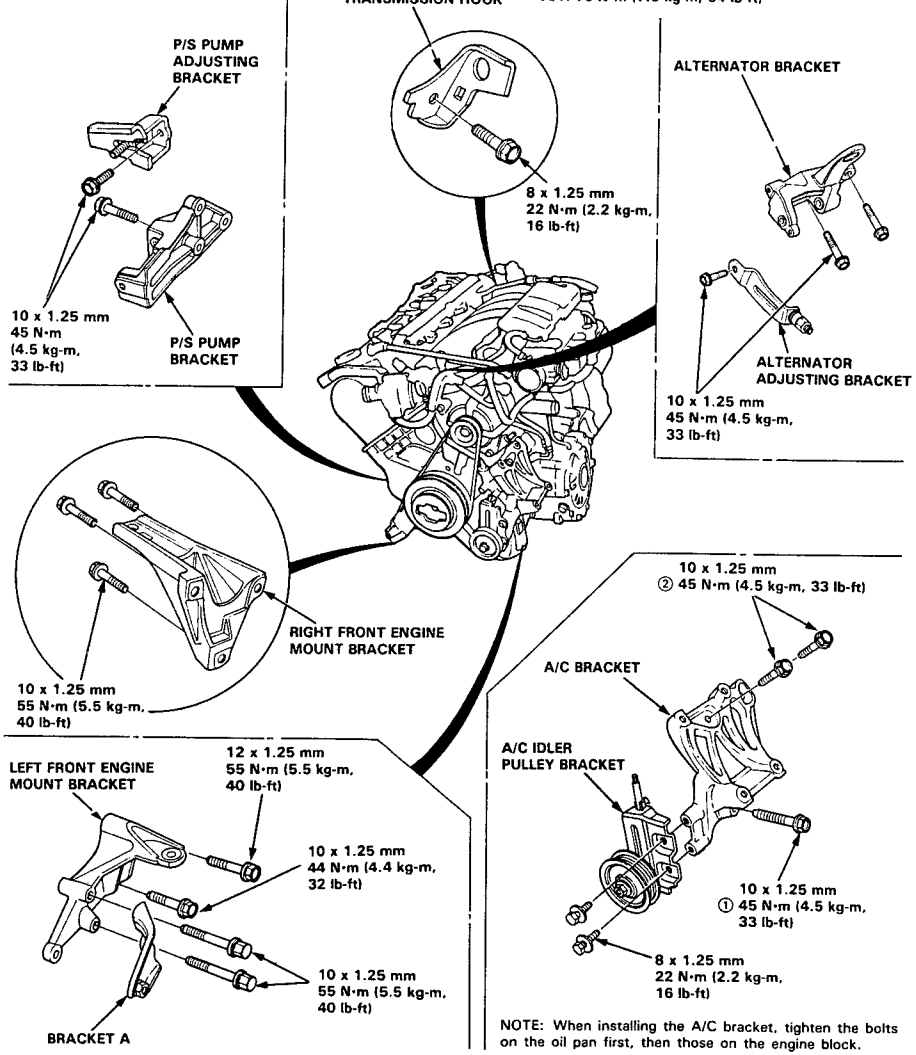

NOTE: When installing the A/C bracket, tighten the bolts on the oil pan first, then those on the engine block.

Cylinder Head/Valve Train

Special Tools 6-2
Illustrated Index 6-3
Valve Seals
  Replacement (Cylinder head removal not required) 6-5
Cylinder Head
  Removal 6-7
  Warpage 6-16
  Installation 6-24
Camshaft Pulley
  Removal 6-10
Rocker Arm Assembly
  Removal 6-10
Rocker Arms
  Overhaul 6-11
Camshaft
  Inspection 6-12
Rocker Arms and Shafts
  Clearance 6-14
Valves, Valve Springs and Valve Seals
  Removal 6-15
  Installation Sequence 6-21
  Valve Installation 6-22
Valve Guides
  Valve Movement 6-17
  Replacement 6-19
  Reaming 6-20
Valve Seats
  Reconditioning 6-18
Camshaft/Rocker Arms and Camshaft Seals
  Installation 6-22
Timing Belt
  Illustrated Index 6-26
  Inspection 6-27
  Tension Adjustment 6-27
Crankshaft Pulley Bolt
  Replacement 6-28
  Removal 6-29
  Installation 6-31
Valve Clearance
  Adjustment 6-33
TDC/CKP/CYP Sensors
  Replacement 6-35

Cylinder Head/Valve Train

Special Tools 6-2
Illustrated Index 6-3
Valve Seals
  Replacement (Cylinder head removal not required) 6-5
Cylinder Head
  Removal 6-7
  Warpage 6-16
  Installation 6-24
Camshaft Pulley
  Removal 6-10
Rocker Arm Assembly
  Removal 6-10
Rocker Arms
  Overhaul 6-11
Camshaft
  Inspection 6-12
Rocker Arms and Shafts
  Clearance 6-14
Valves, Valve Springs and Valve Seals
  Removal 6-15
  Installation Sequence 6-21
  Valve Installation 6-22
Valve Guides
  Valve Movement 6-17
  Replacement 6-19
  Reaming 6-20
Valve Seats
  Reconditioning 6-18
Camshaft/Rocker Arms and Camshaft Seals
  Installation 6-22
Timing Belt
  Illustrated Index 6-26
  Inspection 6-27
  Tension Adjustment 6-27
Crankshaft Pulley Bolt
  Replacement 6-28
  Removal 6-29
  Installation 6-31
Valve Clearance
  Adjustment 6-33
TDC/CKP/CYP Sensors
  Replacement 6-35

Special Tools

Ref. No.	Tool Number	Description	Qty	Page Reference
①	07HAH–PJ7010A or 07HAH–PJ7010B	Valve Guide Reamer, 5.5 mm	1	6-20
②	07JAB–001020A	Holder Handle	1	6-28
③	07JAB–001040A	Holder Attachment, 50 mm	1	6-28
④	07742–0010100	Valve Guide Driver, 5.5 mm	1	6-19, 20
⑤	07757–PJ1010A	Valve Spring Compressor Attachment	1	6-15

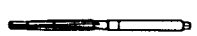

①

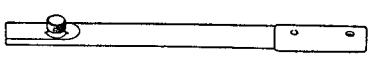

②

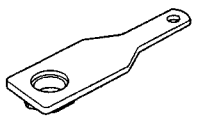

③

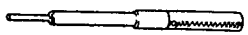

④

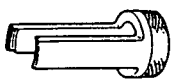

⑤

Illustrated Index

CAUTION: To avoid damaging the cylinder head, wait until the engine coolant temperature drops below 100°F (38°C) before removing it.

NOTE:
- Use new O-rings and gaskets when reassembling.
- Use liquid gasket, Part No. 08718–0001.
- Clean the oil control orifice when installing.
- Prior to reassembling, clean all the parts in solvent, dry them, and apply lubricant to any contact parts.

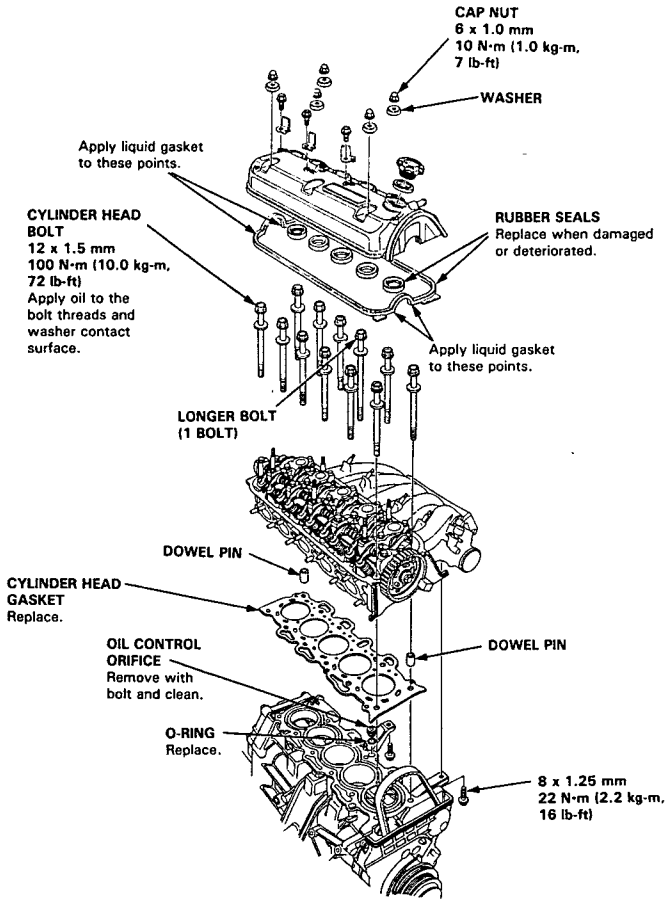

(cont'd)

Illustrated Index

(cont'd)

NOTE:
- Use new O-rings and gaskets when reassembling.
- Use liquid gasket, Part No. 08718–0001.
- Prior to reassembling, clean all the parts in solvent, dry them, and apply lubricant to any contact parts.

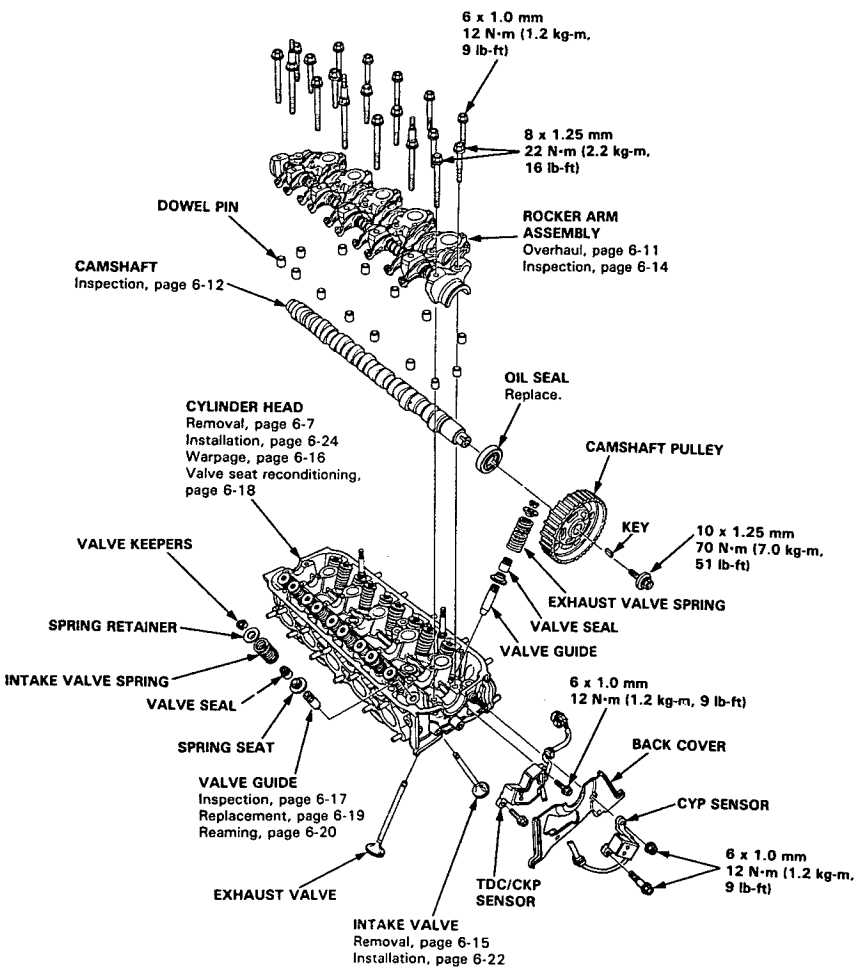

Valve Seals

Replacement (Cylinder head removal not required)

NOTE: Cylinder head removal is not required in this procedure.

The procedure shown below applies when using the in-car valve spring compressor. (Snap-on YA8845 with YA8845-2A 7/8 in attachment)

WARNING Always wear approved eye protection when using the in-car valve spring compressor.

1. Turn the crankshaft so that the No. 1 piston is at top dead center (TDC).

2. Remove the cylinder head cover and the rocker arm assembly (page 6-10).

   NOTE: When removing or installing the rocker arm assembly, do not remove the camshaft holder bolts. The bolts will keep the holders, springs and rocker arms on the shaft.

3. Remove the fuel injectors and the wire harness.

Intake Valve Seals:

4. Using the 8 mm bolts supplied with the tool, mount the two uprights to the cylinder head at the end camshaft holder locations. The uprights fit over the camshaft as shown.

5. Insert the cross shaft through the top holes of the uprights.

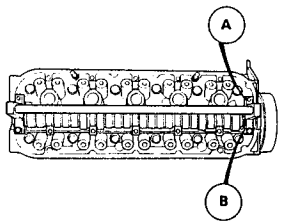

6. Select the 7/8 in diameter long compressor attachment and fasten the attachment to the No. 4 hole in the lever arm with the speed pin supplied.

7. Position the piston at TDC and insert an air adaptor into the spark plug hole. Pump air into the cylinder to keep the valve closed while compressing the springs and removing the valve keepers.

8. Position the lever arm under the cross shaft so the lever is perpendicular to the shaft and the compressor attachment rests on top of the retainer for the spring being compressed. Use the front position slot on the lever as shown.

   NOTE: Put shop towels over the oil passages to prevent the valve keepers from falling into the cylinder head.

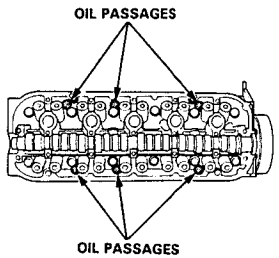

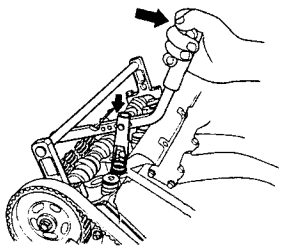

9. Using a downward motion on the lever arm, compress the valve spring and remove the keepers from the valve stem. Slowly release pressure on the spring.

(cont'd)

Valve Seals

Replacement (Cylinder head removal not required) (cont'd)

10. Remove the valve seals (page 6-15).

11. Install the new valve seals (page 6-21).

12. Install the springs, the retainers and the keepers in reverse order of removal.

13. Repeat steps 7 to 12 on the other cylinders.

Exhaust Valve Seals:

14. Using the 8 mm bolts supplied with the tool, mount the two uprights to the cylinder head at the end camshaft holder locations. The uprights fit over the camshaft as shown.

15. Insert the cross shaft through the top holes of the uprights.

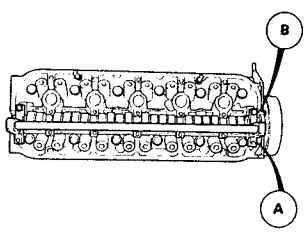

16. Select the 7/8 in diameter long compressor attachment and fasten the attachment to the front hole in the lever arm with the speed pin supplied.

17. Position the piston at TDC and insert an air adaptor onto the spark plug hole. Pump air into the cylinder to keep the valve closed while compressing the springs and removing the valve keepers.

18. Position the lever arm under the cross shaft so the lever is perpendicular to the shaft and the compressor attachemnt rests on top of the retainer for the spring being compressed. Use the rear position slot on the lever as shown.

NOTE: Put shop towels over the oil passages to prevent the valve keepers from falling into the cylinder head.

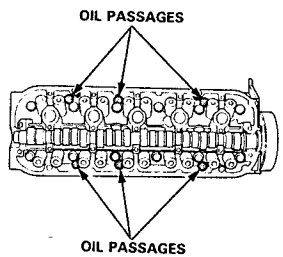

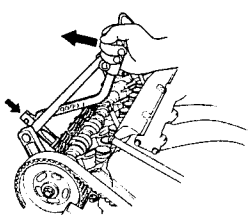

19. Using an upward motion on the lever arm, compress the valve spring and remove the keepers from the valve stem. Slowly release pressure on the spring.

20. Remove the valve seals (page 6-15).

21. Install the new valve seals (page 6-21).

22. Install the springs, the retainers and the keepers in reverse order of removal.

23. Repeat steps 17 to 21 on the other cylinders.

Cylinder Head

Removal

Engine removal is not required for this procedure.

CAUTION: To avoid damaging the cylinder head, wait until the coolant temperature drops below 100°F (38°C) before loosening the retaining bolts.

NOTE:
- Inspect the timing belt before removing the cylinder head.
- Turn the crankshaft so that the No. 1 piston is at top dead center (page 6-31).
- Mark all emission hoses before disconnecting them.
- Anti-theft radios have a coded theft protection circuit. Be sure to get the customer's code number before
  - Disconnecting the battery.
  - Removing the No. 39 (10 A) fuse in the underhood fuse/relay box.
  - Removing the radio.

  After service, reconnect power to the radio and turn it on.
  When the word "CODE" is displayed, enter the customer's 5-digit code to restore radio operation.

1. Disconnect the negative terminal from the battery.

2. Drain the engine coolant (page 10-5).
   - Remove the radiator cap to speed draining.

3. Relieve the fuel pressure.

   WARNING Do not smoke while working on fuel system, keep open flame or spark away from work area. Drain fuel only into an approved container.

4. Remove the intake air duct.

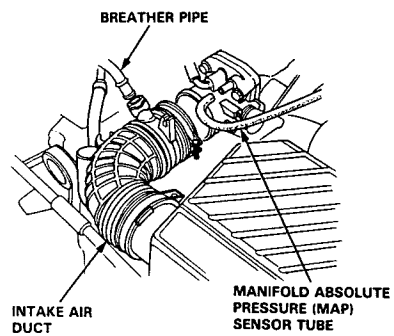

5. Disconnect the fuel feed hose (page 5-3) and fuel return hose (page 5-4).

6. Disconnect the throttle cable at the throttle body (page 5-3).

   NOTE:
   - Take care not to bend the cable when removing it. Always replace any kinked cable with a new one.
   - Adjust the throttle cable when installing (see section 11).

7. Remove the engine ground wire and the evaporative emission (EVAP) control canister hoses from intake manifold (page 5-4).

8. Remove the heater hoses and brake booster vacuum hose (page 5-4).

9. Remove the ignition coil wire, condenser wire and engine ground cable (page 5-2).

10. Remove the ABS motor relay box and the battery heat shield (page 5-2).

11. Disconnect the ignition wires, then remove the distributor (page 5-4).

12. Remove the engine wire harness connectors and wire harness clamps from the cylinder head and intake manifold.
    - TDC/CYP/CKP sensor connector
    - Engine coolant temperature (ECT) switch connector
    - Five fuel injector connector
    - Exhaust gas recirculation (EGR) valve lift sensor connector
    - Bypass solenoid valve connector
    - EVAP purge cut solenoid valve connector
    - Idle air control (IAC) valve connector
    - Throttle position (TP) sensor connector
    - Intake air temperature (IAT) sensor connector
    - ECT sensor connector
    - ECT gauge sending unit connector

(cont'd)

Cylinder Head

Removal (cont'd)

13. Remove the emission vacuum hoses and water bypass hoses from the intake manifold assembly.

14. Remove the upper radiator hose and water bypass hose from the thermostat case.

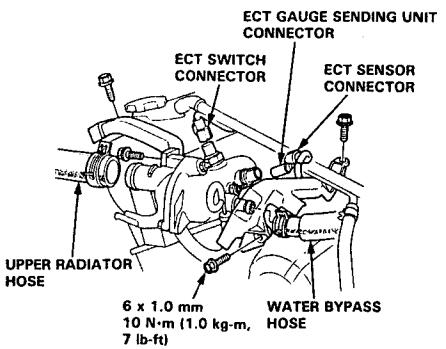

15. Remove the intake manifold bracket bolts.

16. Remove the heated oxygen sensor (HO2S).

17. Remove the exhaust manifold bracket.

18. Remove the exhaust pipe A.

19. Remove the exhaust manifold covers.

20. Remove the exhaust manifold.

21. Remove the insulator plate.

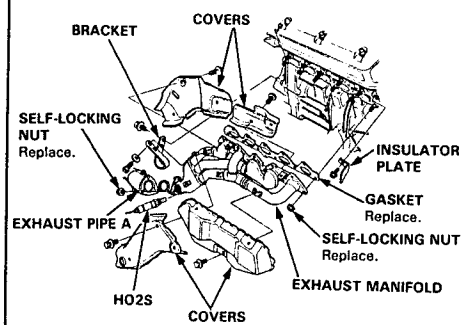

22. Remove the positive crankcase ventilation (PCV) hose, then remove the cylinder head cover.

23. Remove the upper cover.

24. Loosen the timing belt adjusting bolt 180°.

25. Push the tensioner to release tension from the belt, then retighten the adjusting bolt.

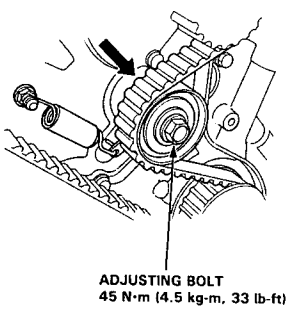

26. Remove the timing belt from the camshaft pulley.

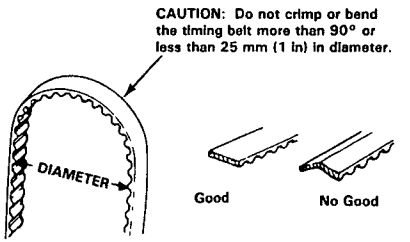

27. Remove the cylinder head bolts, then remove the cylinder head.

CAUTION: To prevent warpage, unscrew the bolts in sequence 1/3 turn at a time; repeat until all bolts are loosened.

CYLINDER HEAD BOLT LOOSENING SEQUENCE:

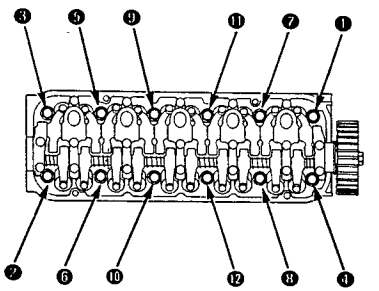

NOTE: Separate the cylinder head from the engine block with a flat blade screwdriver as shown.

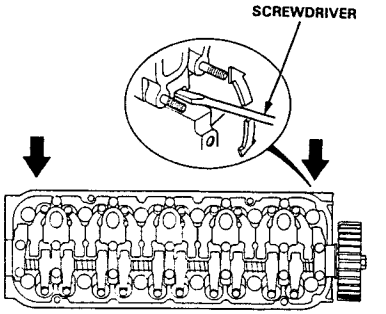

28. Disconnect the heater pipe from the connecting pipe.

29. Remove the intake manifold from the cylinder head.

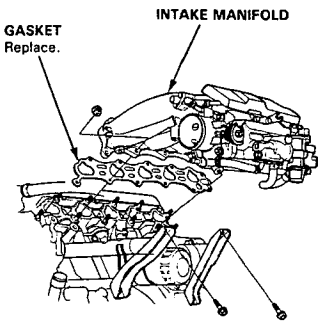

Camshaft Pulley

Removal

1. To ease reassembly, turn the camshaft pulley until the "UP" mark faces up, and the front timing marks are aligned with the cylinder head upper surface.

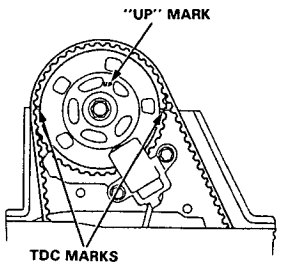

2. Remove the CYP sensor.
3. Remove the retaining bolt, the camshaft pulley and the key, then remove the back cover.
4. Remove the TDC/CKP sensor.

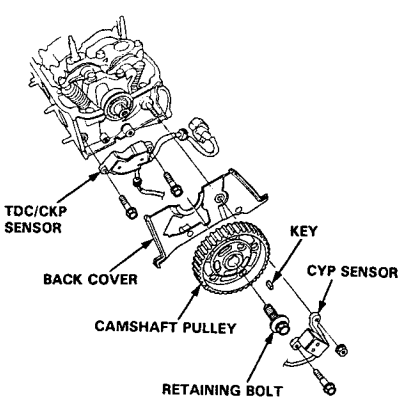

Rocker Arm Assembly

Removal

1. Loosen the adjusting screws, then remove the bolts and the rocker arm assembly.

NOTE:
- Unscrew the camshaft holder bolts two turns at a time, in a crisscross pattern, to prevent damaging the valves or rocker arm assembly.
- When removing the rocker arm assembly, do not remove the camshaft holder bolts. The bolts will keep the camshaft holders, the springs and the rocker arms on the shafts.

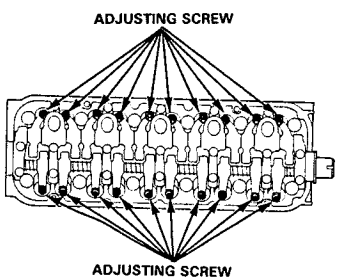

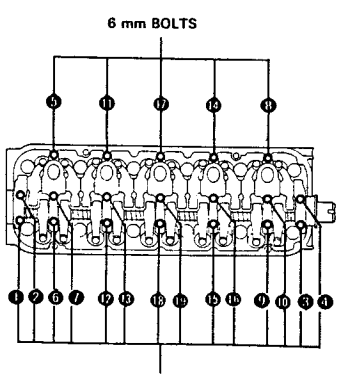

Rocker Arms

Overhaul

NOTE:
- Identify parts as they are removed to ensure reinstallation in original locations.
- Inspect rocker shafts and rocker arms (page 6-14).
- Rocker arms must be installed in the same position if reused.
- When removing or installing the rocker arm assembly, do not remove the camshaft holder bolts. The bolts will keep the holders, springs and rocker arms on the shaft.
- When reassembling, fit the projection of the intake rocker shaft to the notch in the camshaft holder.

Prior to reassembling, clean all the parts in solvent, dry them and apply lubricant to any contact parts.

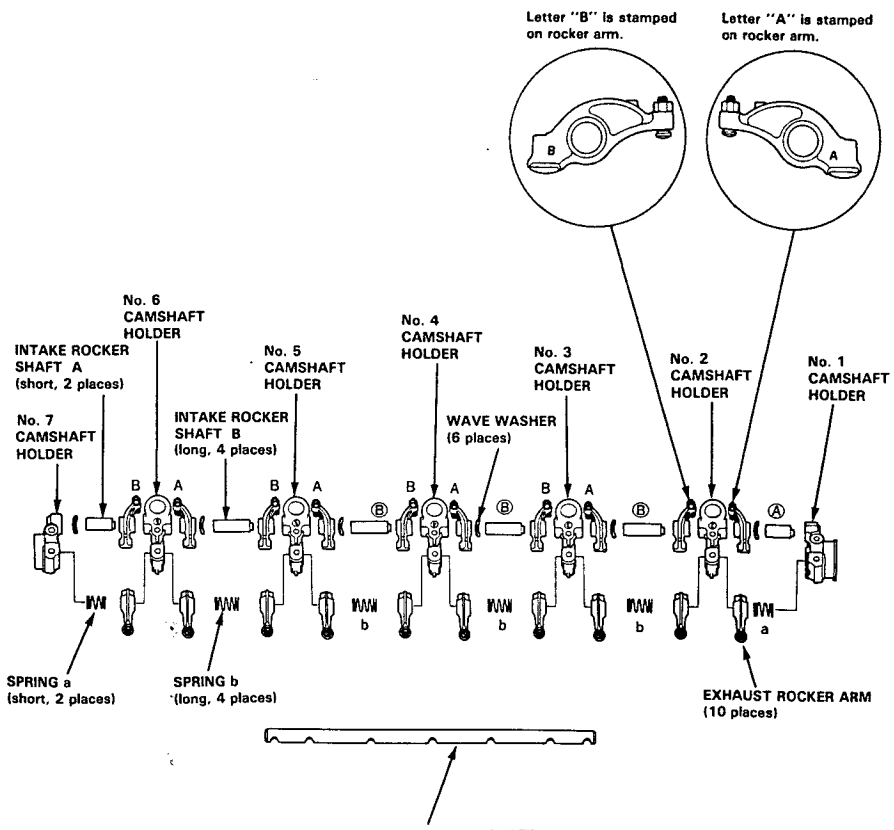

Camshaft

Inspection

NOTE:
- Do not rotate the camshaft during inspection.
- Remove the rocker arms and rocker shafts.

1. Put the camshaft and the camshaft holders on the cylinder head, then tighten the bolts to the specified torque.

   Specified torque:
   8 mm bolts: 22 N·m (2.2 kg-m, 16 lb-ft)
   6 mm bolts: 12 N·m (1.2 kg-m, 9 lb-ft)

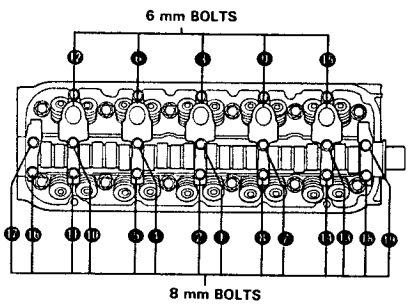

2. Seat the camshaft by pushing it toward the rear of the cylinder head.

3. Zero the dial indicator against the end of the camshaft. Push the camshaft back and forth and read the end play.

   Camshaft End Play:
   Standard (New): 0.05–0.15 mm (0.002–0.006 in)
   Service Limit: 0.5 mm (0.02 in)

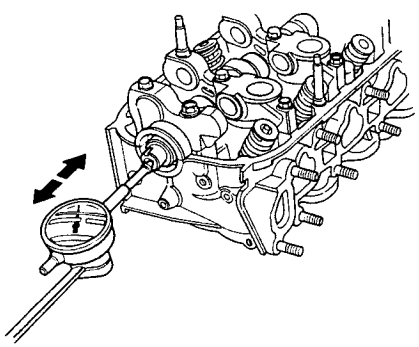

4. Remove the bolts, then remove the camshaft holders from the cylinder head.
   - Lift camshaft out of cylinder head, wipe clean, then inspect lift ramps. Replace camshaft if lobes are pitted, scored, or excessively worn.
   - Clean the camshaft bearing surfaces in the cylinder head, then set camshaft back in place.
   - Insert plastigage strip across each journal.

5. Install the camshaft holders and tighten the bolts to the specified torque.

6. Remove the camshaft holders, then measure the widest portion of the plastigage on each journal.

   Camshaft-to-Holder Oil Clearance:
   Standard (New): 0.050–0.089 mm (0.0020–0.0035 in)
   Service Limit: 0.15 mm (0.006 in)

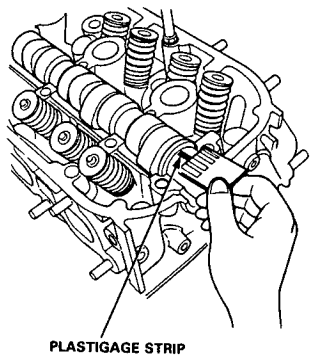

7. If the camshaft-to-holder oil clearance is out of tolerance:
   - And the camshaft has already been replaced, you must replace the cylinder head.
   - If the camshaft has not been replaced, first check the total runout with the camshaft supported on V-blocks.

   Camshaft Total Runout:
   Standard (New): 0.03 mm (0.001 in) max.
   Service Limit: 0.04 mm (0.002 in)

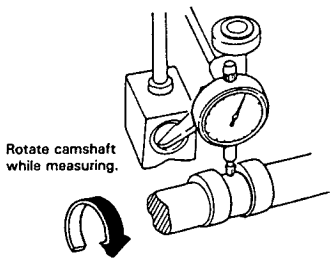

   - If the total runout of the camshaft is within tolerance, replace the cylinder head.
   - If the total runout is out of tolerance, replace the camshaft and recheck. If the oil clearance is still out of tolerance, replace the cylinder head.

8. Check the cam lobe height wear.

   Cam Lobe Height Standard (New):
   INTAKE: 39.203 mm (1.5434 in)
   EXHAUST: 38.875 mm (1.5305 in)

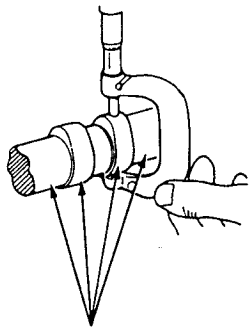

Rocker Arms and Shafts

Clearance

Measure the intake rocker shafts and exhaust rocker shaft.

1. Measure the diameter of the shaft at the first rocker location.

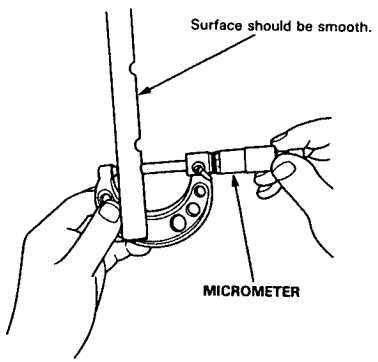

2. Zero the gauge to the shaft diameter.

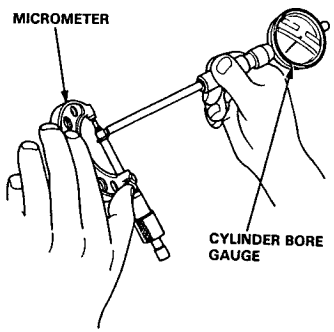

3. Measure inside diameter of rocker arm and check for out-of-round condition.

Rocker Arm-to-shaft clearance:
Service Limit: 0.08 mm (0.003 in)

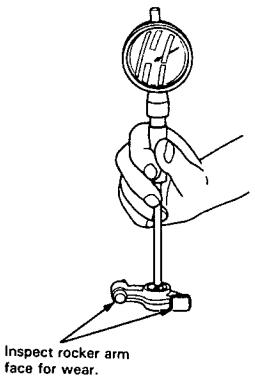

4. Repeat for all the rockers.
   - If the clearance is over the service limit, replace the rocker shaft and all overtolerance rocker arms.

Valves, Valve Springs and Valve Seals

Removal

NOTE: Identify valves and valve springs as they are removed so that each item can be reinstalled in its original position.

1. Using an appropriate-sized socket and plastic mallet, lightly tap the valve retainer to loosen the valve keepers before installing the valve spring compressor.

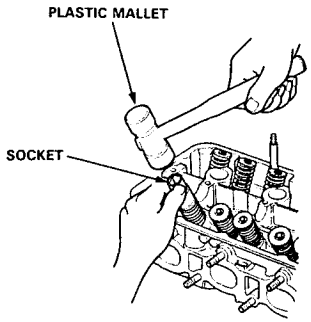

2. Install the valve spring compressor. Compress the spring and remove the valve keeper.

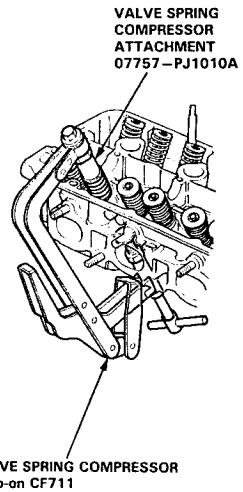

3. Install the special tool as shown.

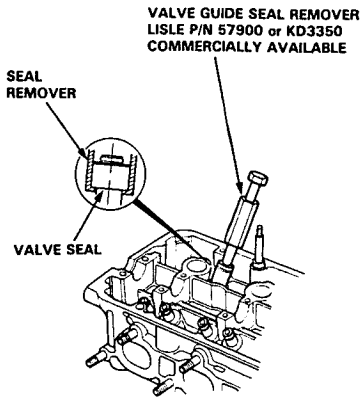

4. Remove the valve seal.

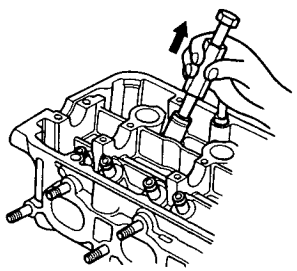

(cont'd)

Valves, Valve Springs and Valve Seals

Removal (cont'd)

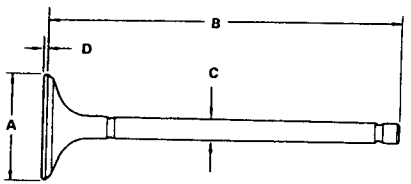

Intake Valve Dimensions
A Standard (New): 33.9–34.1 mm (1.33–1.34 in)
B Standard (New): 110.88–111.18 mm (4.365–4.377 in)
C Standard (New): 5.475–5.485 mm (0.2156–0.2159 in)
C Service Limit: 5.445 mm (0.2144 in)
D Standard (New): 0.85–1.15 mm (0.033–0.045 in)
D Service Limit: 0.65 mm (0.026 in)

Exhaust Valve Dimensions
A Standard (New): 28.9–29.1 mm (1.14–1.15 in)
B Standard (New): 123.15–123.45 mm (4.848–4.860 in)
C Standard (New): 5.450–5.460 mm (0.2146–0.2150 in)
C Service Limit: 5.420 mm (0.2134 in)
D Standard (New): 1.55–1.85 mm (0.061–0.073 in)
D Service Limit: 1.35 mm (0.053 in)

Cylinder Head

Warpage

NOTE: If the camshaft-to-holder oil clearances (page 6-12) are not within specification, the head cannot be resurfaced.

If the camshaft-to-holder oil clearances are within specifications, check the head for warpage.

- If warpage is less than 0.05 mm (0.002 in) cylinder head resurfacing is not required.
- If warpage is between 0.05 mm (0.002 in) and 0.2 mm (0.01 in), resurface cylinder head.
- Maximum resurface limit is 0.2 mm (0.01 in) based on a height of 100 mm (3.9 in).

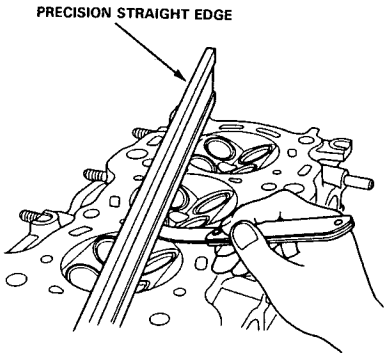

Measure along edges, and 3 ways across center.

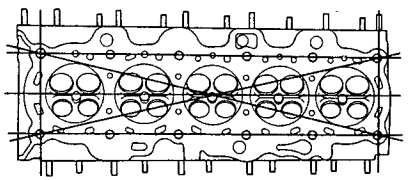

Cylinder Head Height:
Standard (New): 99.95–100.05 mm (3.935–3.939 in)

Valve Guides

Valve Movement

Measure the guide-to-stem clearance with a dial indicator while rocking the stem in the direction of normal thrust (wobble method).

Intake Valve Stem-to-Guide Clearance:
Standard (New): 0.04–0.09 mm (0.002–0.004 in)
Service Limit: 0.15 mm (0.006 in)

Exhaust Valve Stem-to-Guide Clearance:
Standard (New): 0.10–0.16 mm (0.004–0.006 in)
Service Limit: 0.22 mm (0.009 in)

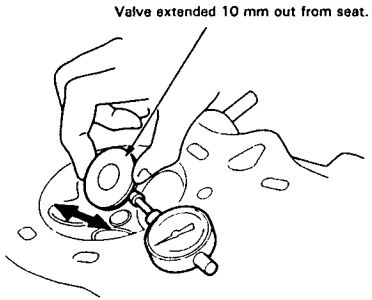

- If measurement exceeds the service limit, recheck using a new valve.
- If measurement is now within the service limit, reassemble using a new valve.
- If measurement still exceeds limit, recheck using alternate method below, then replace valve and guide, if necessary.

NOTE: An alternate method of checking guide to stem clearance is to subtract the O.D. of the valve stem, measured with a micrometer, from the I.D. of the valve guide, measured with an inside micrometer or ball gauge. Take the measurements in three places along the valve stem and three places inside the valve guide. The difference between the largest guide measurement and the smallest stem measurement should not exceed the service limit.

Intake Valve Stem-to-Guide Clearance:
Standard (New): 0.020–0.045 mm (0.0008–0.0018 in)
Service Limit: 0.075 mm (0.0030 in)

Exhaust Valve Stem-to-Guide Clearance:
Standard (New): 0.05–0.08 mm (0.002–0.003 in)
Service Limit: 0.12 mm (0.005 in)

Valve Seats

Reconditioning

1. Renew the valve seats in the cylinder head using a valve seat cutter.

   NOTE: If the guides are worn (page 6-17), replace them (page 6-19) before cutting the valve seats.

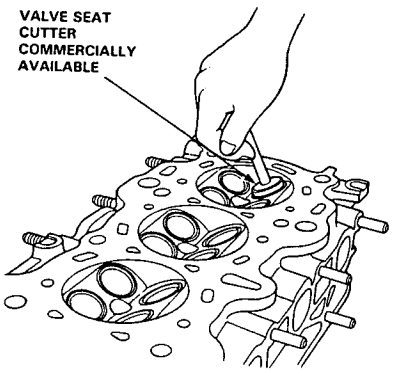

2. Carefully cut a 45° seat, removing only enough material to ensure a smooth and concentric seat.

3. Bevel the upper edge of the seat with the 30° cutter and the lower edge of the seat with the 60° cutter. Check the width of seat and adjust accordingly.

4. Make one more very light pass with the 45° cutter to remove any possible burrs caused by the other cutters.

   Valve Seat Width:

Standard (New):	Intake	1.25–1.55 mm (0.049–0.061 in)
	Exhaust	1.25–1.55 mm (0.049–0.061 in)
Service Limit:	Intake	2.0 mm (0.08 in)
	Exhaust	2.0 mm (0.08 in)

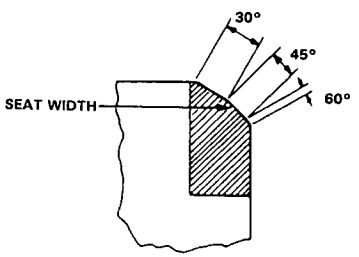

5. After resurfacing the seat, inspect for even valve seating: Apply Prussian Blue compound to the valve face, and insert the valve in its original location in the head, then lift and snap it closed against the seat several times.

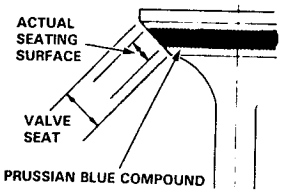

6. The actual valve seating surface, as shown by the blue compound, should be centered on the seat.
   - If it is too high (closer to the valve stem), you must make a second cut with the 60° cutter to move it down, then one more cut with the 45° cutter to restore seat width.
   - If it is too low (closer to the valve edge), you must make a second cut with the 30° cutter to move it up, then one more cut with the 45° cutter to restore seat width.

   NOTE: The final cut should always be made with the 45° cutter.

7. Insert the intake and exhaust valves in the head and measure the valve stem installed height.

   Valve Stem Installed Height:

Standard (New):	Intake	48.745–49.215 mm (1.9191–1.9376 in)
	Exhaust	51.315–51.785 mm (2.0203–2.0388 in)
Service Limit:	Intake	49.465 mm (1.9474 in)
	Exhaust	52.035 mm (2.0486 in)

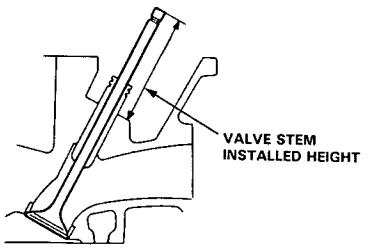

8. If the valve stem installed height is over the service limit, replace the valve and recheck. If its still over the service limit, replace the cylinder head; the valve seat in the head is too deep.

Valve Guides

Replacement

1. As illustrated in the removal steps of this procedure use a commercially-available air-impact driver attachment be modified to fit the diameter of the valve guides. In most cases, the same procedure can be done using Valve Guide Drivers and a conventional hammer.

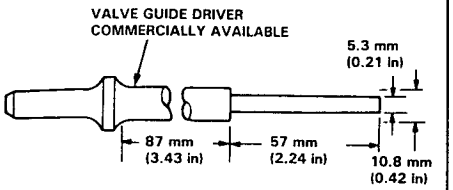

   Removal and Installation
   VALVE GUIDE DRIVER, 5.5 mm
   07742–0010100

2. Select the proper replacement guides and chill them in the freezer section of a refrigerator for about an hour.

3. Use a hot plate or oven to evenly heat the cylinder head to 300°F (150°C). Monitor the temperature with a cooking thermometer.

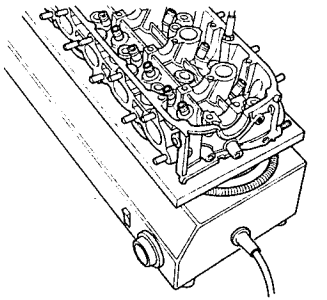

   CAUTION:
   - **Do not use a torch; it may warp the head.**
   - **Do not get the head hotter than 300°F (150°C); excessive heat may loosen the valve seats.**
   - **To avoid burns, use heavy gloves when handling the heated cylinder head.**

4. Working from the camshaft side, use the driver and an air hammer to drive the guide about 2 mm towards the combustion chamber. This will knock off some of the carbon and make removal easier.

   CAUTION:
   - **Always wear safety goggles or a face shield when using the air hammer.**
   - **Hold the air hammer directly in line with the valve guide to prevent damaging the driver.**

5. Turn the head over and drive the guide out toward the camshaft side of head.

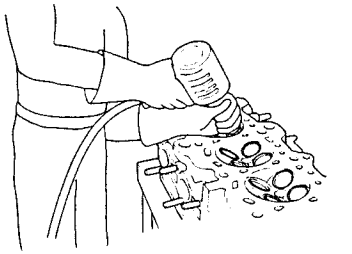

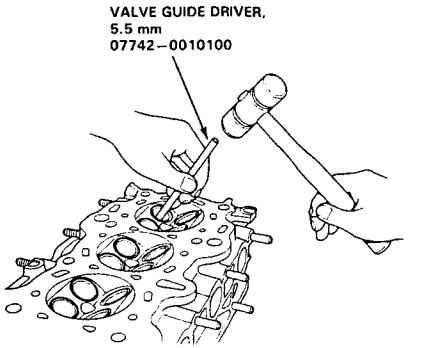

   If a valve guide still won't move, drill it out with a 8 mm (5/16 in) bit, they try again.

   CAUTION: Drill guides only in extreme cases; you could damage the cylinder head if the guide breaks.

6. Remove the new guides from the refrigerator, one at a time, as you need them.

(cont'd)

Valve Guides

Replacement (cont'd)

7. Slip a 6 mm (0.2 in) steel washer and the correct driver attachment over the end of the driver. (The washer will absorb some of the impact and extend the life of the driver).

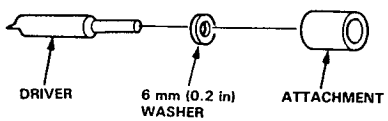

8. Install the new guide(s) from the camshaft side of the head; drive each one in until the attachment bottoms on the head. If you have all twenty guides to do, you may have to reheat the head one or two more times.

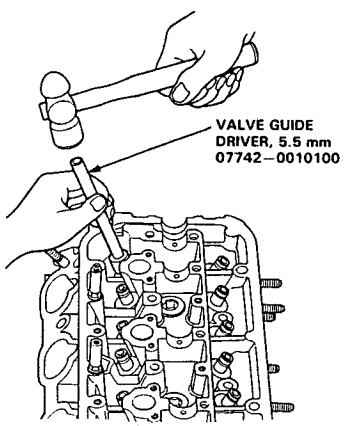

Valve Guide Installed Height:
Intake: 24.75–25.25 mm (0.974–0.994 in)
Exhaust: 16.05–16.55 mm (0.632–0.652 in)

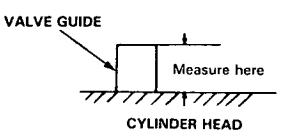

Reaming

NOTE: For new valve guides only.

1. Coat both the reamer and valve guide with cutting oil.
2. Rotate the reamer clockwise the full length of the valve guide bore.
3. Continue to rotate the reamer clockwise while removing it from the bore.
4. Thoroughly wash the guide in detergent and water to remove any cutting residue.
5. Check the clearance with a valve (page 6-17).
   – Verify that the valve slides in the valve guide without exerting pressure.

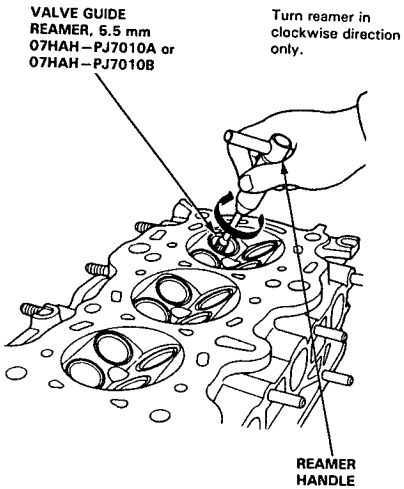

Valves, Valve Springs and Valve Seals

Valve Spring and Valve Seal Installation Sequence

NOTE: Exhaust and intake valve seals are NOT interchangeable.

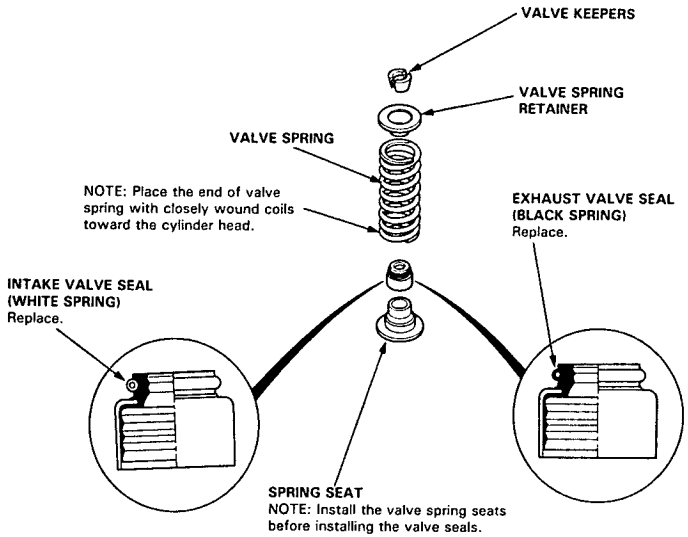

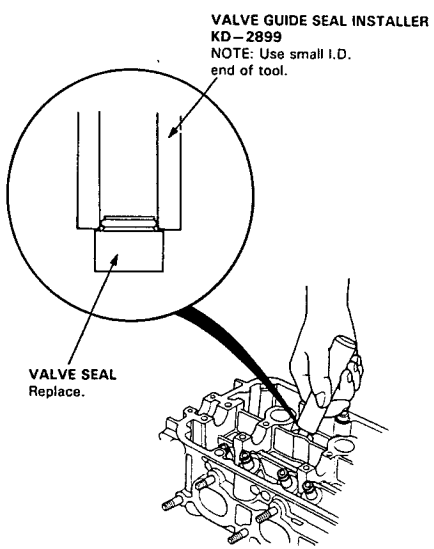

Valves, Valve Springs and Valve Seals

Valve Installation

- When installing the valves in the cylinder head, coat the valve stems with oil before inserting them into valve guides, and make sure the valves move up and down smoothly.
- When the valves and springs are in place, lightly tap the end of each valve stem two or three times to ensure proper seating of the valve and valve keepers.

NOTE: Tap the valve stem only along its axis so you do not bend the stem.

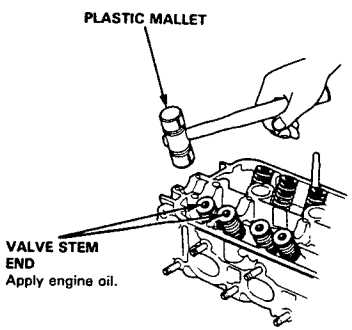

Camshaft/Rocker Arms and Camshaft Seals

Installation

CAUTION:
- **Make sure that all the rockers are in alignment with the valves when torquing the rocker assembly bolts.**
- **To prevent the rocker arm assembly from coming apart, leave the camshaft holder mounting bolts in the holes.**

1. After wiping down the cam and journals in the cylinder head, lubricate both surfaces and install the camshaft.
2. Set the camshaft and camshaft oil seal as shown below.
3. Install the camshaft seal with the open side (spring) facing in.

Lubricate the cam lobes after reassembly.

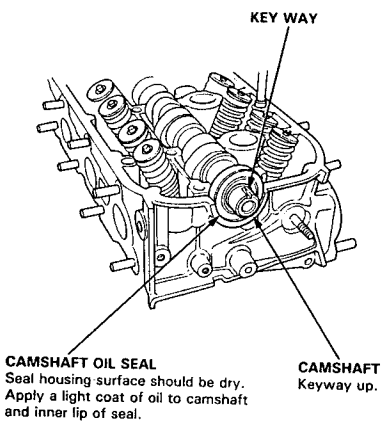

4. Apply liquid gasket to the head mating surfaces of the No. 1 and the No. 7 camshaft holders.
   – Apply liquid gasket to the shaded areas.

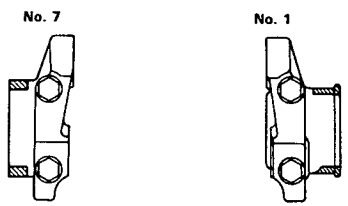

5. Set the rocker arm assembly in place and loosely install the bolts.
   – Make sure that the rocker arms are properly positioned on the valve stems.

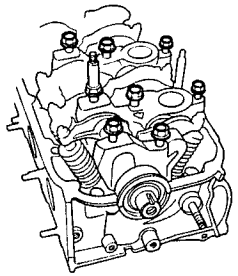

6. Tighten each bolt two turns at a time in the sequence shown below to ensure that the rockers do not bind on the valves.

Specified torque:
8 mm bolts: 22 N·m (2.2 kg-m, 16 lb-ft)
6 mm bolts: 12 N·m (1.2 kg-m, 9 lb-ft)

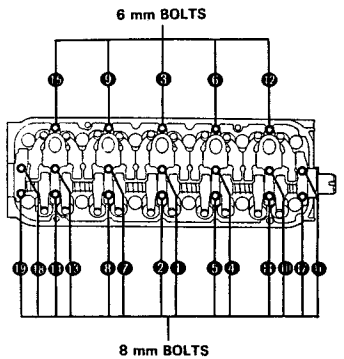

7. Install the TDC/CKP sensor and the back cover.

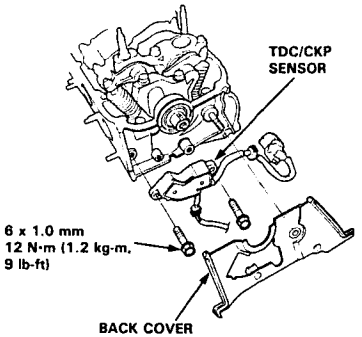

8. Install the camshaft pulley and the CYP sensor.

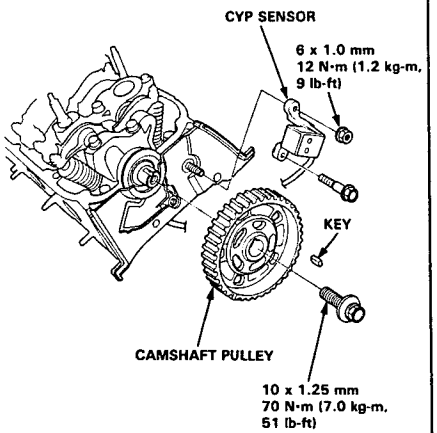

Cylinder Head

Installation

Install the cylinder head in the reverse order of removal:

NOTE:
- Always use a new cylinder head gasket.
- Cylinder head and engine block surface must be clean.
- Turn the crankshaft so that No. 1 piston is at TDC (page 6-31).
- Clean the oil control orifice when installing.

1. Install the oil control orifice, the cylinder head gasket and the dowel pins to the engine block.

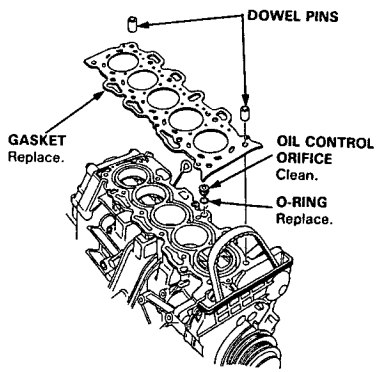

2. Install the intake manifold on the cylinder head, then tighten the nuts in a crisscross pattern in two or three steps, beginning with the inner nut.
   - Always use a new intake manifold gasket.

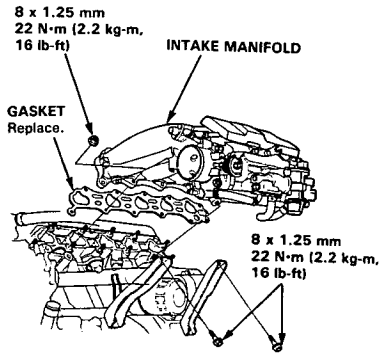

3. Install the cylinder head on the engine block. The cylinder head dowel pins and the head oil control orifice must be aligned.
   - Turn the camshaft pulley to TDC before installing.

4. Tighten the cylinder head bolts sequentially in two or three steps.
   - Apply clean engine oil to the bolt threads and washer contact surfaces.

Specified Torque:
12 x 1.5 mm
100 N·m (10.0 kg-m, 72 lb-ft)

NOTE: We recommend using a beam-type torque wrench. When using a preset-type torque wrench, be sure to tighten slowly and not to over-tighten.

CYLINDER HEAD BOLTS TORQUE SEQUENCE

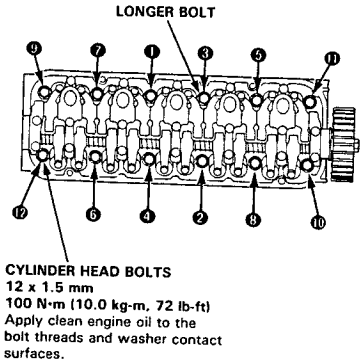

5. Tighten the intake manifold bracket bolts.

8. Loosely install the bracket to the exhaust manifold.

9. Install the exhaust manifold on the cylinder head, then tighten the self-locking nuts in a crisscross pattern in two or three steps, beginning with the inner nut.
   - Apply oil to the self-locking nut threads.
   - Always use new exhaust manifold gaskets.

10. Tighten exhaust manifold bracket bolts.

11. Install the exhaust manifold covers.

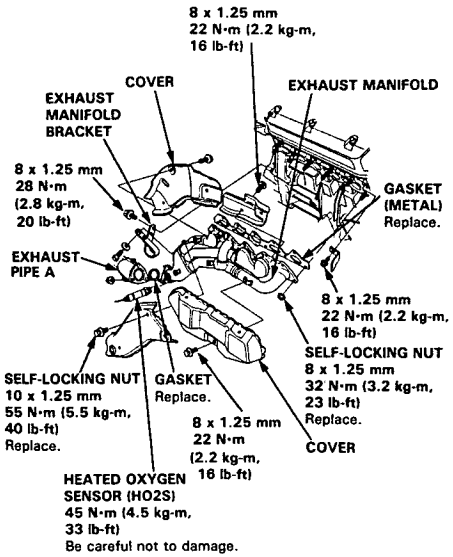

12. Install exhaust pipe A.

13. Install the HO2S.

14. Apply liquid gasket to the head mating surface of the No. 1 and No. 7 camshaft holder, then install the cylinder head cover.
   – Apply liquid gasket to the shaded areas.

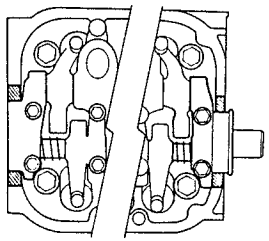

Timing Belt

Illustrated Index

NOTE:
- Turn the crankshaft so that the No. 1 piston is at TDC (page 6-31).
- Replace the rubber seals if they are damaged or have deteriorated.

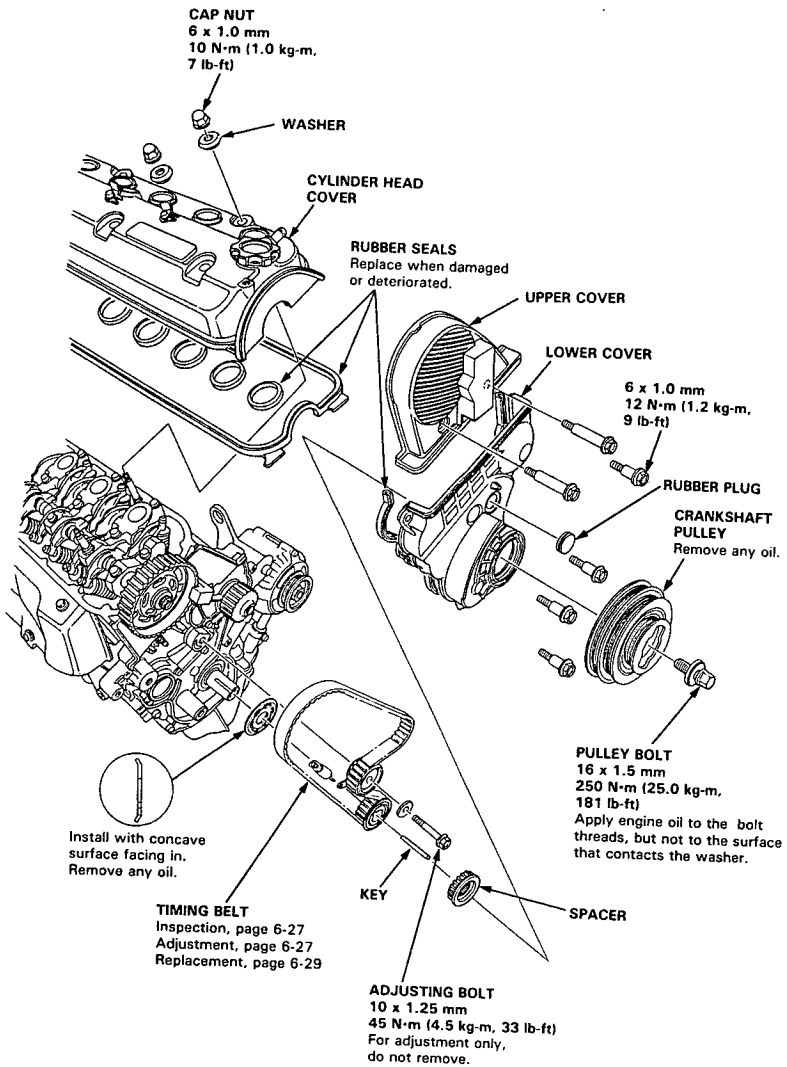

Timing Belt

Inspection

1. Disconnect the alternator terminal and the connector, then remove the engine wire harness from the cylinder head cover.
2. Remove the cylinder head cover.
3. Remove the upper cover.
4. Inspect the timing belt for cracks and oil or coolant soaking.

   NOTE:
   - Replace the belt if oil or coolant soaked.
   - Remove any oil or solvent that gets on the belt.

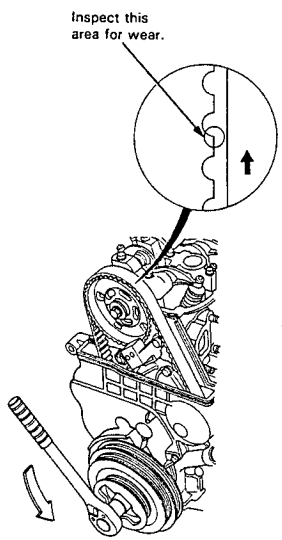

5. After inspecting, retorque the crankshaft pulley bolt to 250 N·m (25.0 kg-m, 181 lb-ft).

Tension Adjustment

CAUTION: Always adjust the timing belt tension with the engine cold.

NOTE:
- The adjuster is spring-loaded to properly tension to the belt after making the following adjustment.
- Always rotate the crankshaft counterclockwise when viewed from the pulley side. Rotating it clockwise may result in improper adjustment of the belt tension.

1. Disconnect the alternator terminal and the connector, then remove the engine wire harness from the cylinder head cover.
2. Remove the cylinder head cover.
3. Set the No. 1 piston at TDC (page 6-31).
4. Loosen the adjusting bolt 180°.

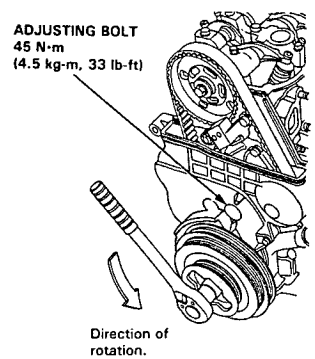

5. Rotate the crankshaft counterclockwise 3-teeth on the camshaft pulley to create tension on the timing belt.
6. Make sure the timing belt and the camshaft pulley are engaged securely.
7. Torque the adjusting bolt to 45 N·m (4.5 kg-m, 33 lb-ft).
8. After adjusting, retorque the crankshaft pulley bolt to 250 N·m (25.0 kg-m, 181 lb-ft).

Crankshaft Pulley Bolt

Replacement

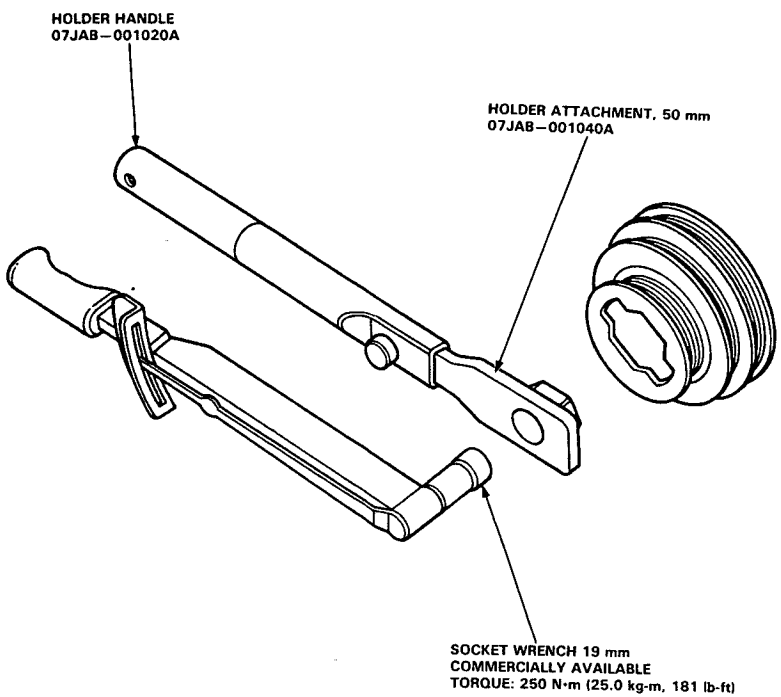

Timing Belt

Removal

CAUTION: Inspect the water pump when replacing the timing belt (page 10-9).

NOTE:
- Turn the crankshaft so that the No. 1 piston is at top dead center (page 6-31).
- Before removing the timing belt, mark its direction of rotation if it is to be reused.
- Anti-theft radios have a coded theft protection circuit. Be sure to get the customer's code number before
  - Disconnecting the battery.
  - Removing the No. 39 (10 A) fuse in the underhood fuse/relay box.
  - Removing the radio.

  After service, reconnect power to the radio and turn it on.

  When the word "CODE" is displayed, enter the customer's 5-digit code to restore radio operation.

1. Disconnect the negative terminal from the battery.
2. Remove the engine wire harness.
3. Loosen the mounting bolt/nut and adjusting bolt, then remove the power steering (P/S) pump belt.

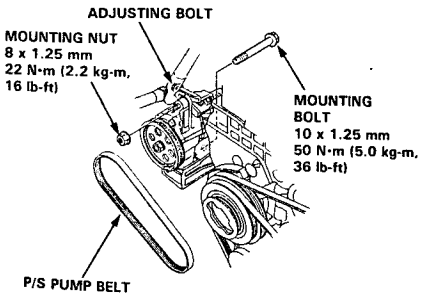

4. Loosen the idler pulley center nut and adjusting bolt, then remove the air conditioning (A/C) compressor belt.

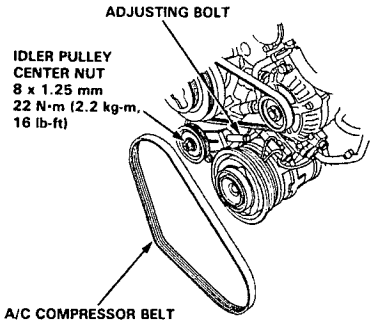

5. Loosen the mounting bolts and adjusting nut, then remove the alternator belt.

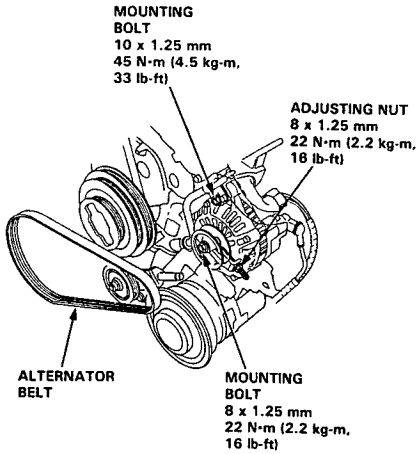

(cont'd)

Timing Belt

Removal (cont'd)

6. Remove the cylinder head cover.
7. Remove the upper cover.
8. Remove the crankshaft pulley.
9. Remove the lower cover.
10. Loosen the timing belt adjusting bolt 180°.
11. Push the tensioner to release tension from the belt, then retighten the adjusting bolt.
12. Remove the timing belt from the pulleys.

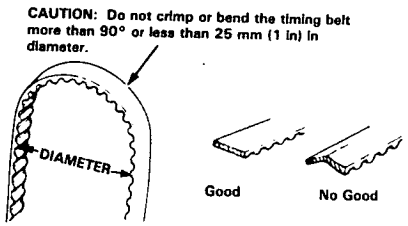

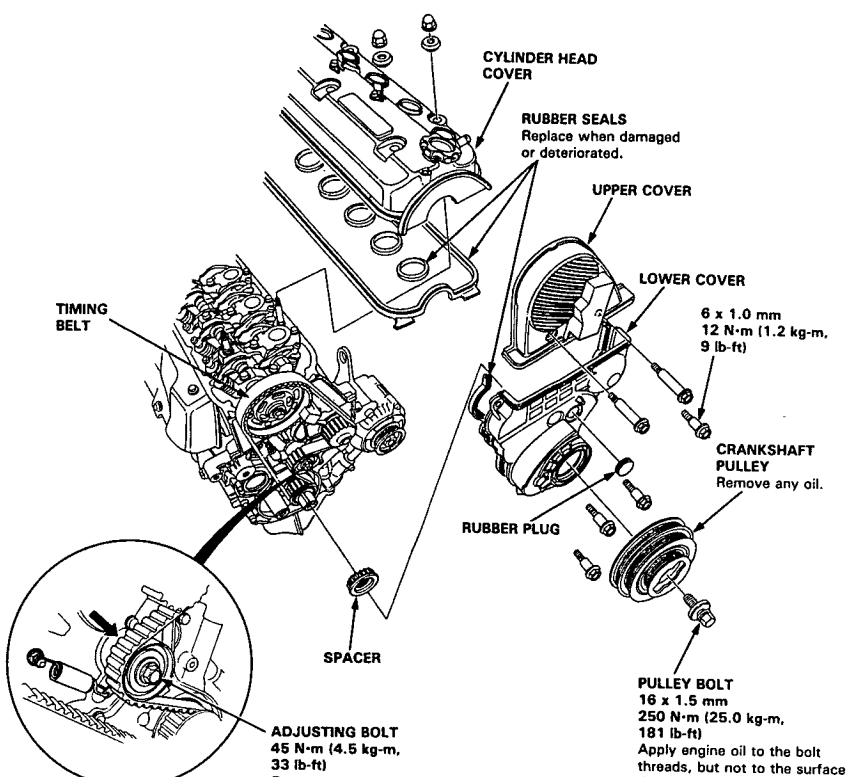

Installation

1. Install the timing belt in the reverse order of removal;
   Only key points are described here.
2. Position the crankshaft and the camshaft pulleys as shown before installing the timing belt.
   A Set the crankshaft so that the No. 1 piston is at top dead center (TDC).
   NOTE: Align the O mark on the teeth side of the timing belt drive pulley to the ▽ pointer on the oil pump.
   B Align the TDC marks on the camshaft pulley with the cylinder head upper surface.

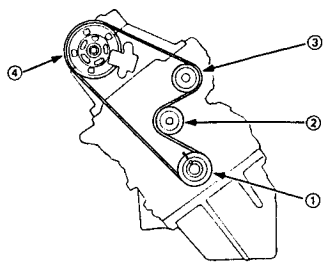

3. Install the timing belt tightly in the sequence shown.
   ① Timing belt pulley (crankshaft) → ② Adjusting Pulley → ③ Water pump pulley → ④ Camshaft pulley.

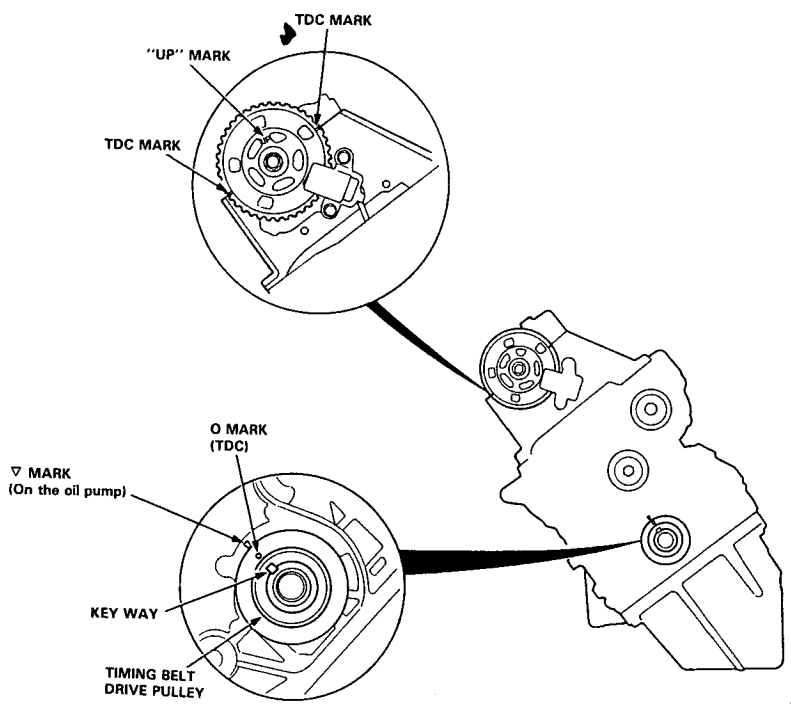

(cont'd)

Timing Belt

Installation (cont'd)

4. Loosen the adjusting bolt, and retighten it after tensioning the belt.

5. Rotate the crankshaft about 5 or 6 turns counter clockwise so that the belt may fit in position on the pulleys.

6. Adjust the timing belt tension (page 6-27).

7. Check the crankshaft pulley and the camshaft pulley at TDC.

CRANKSHAFT PULLEY:

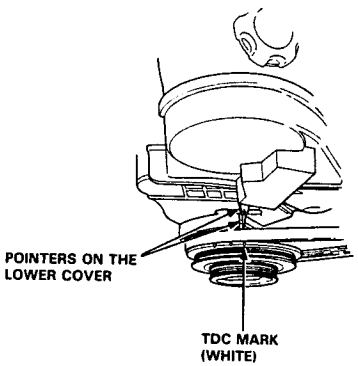

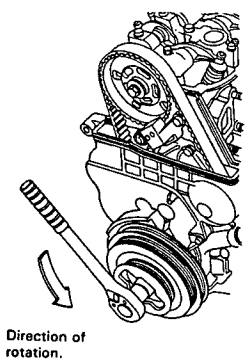

CAMSHAFT PULLEY:

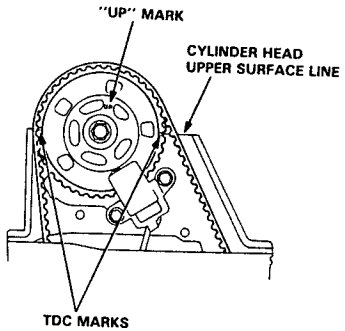

8. If the camshaft pulley is not positioned at TDC, remove the timing belt and adjust the positioning following the procedure on page 6-31, then reinstall the timing belt.

NOTE:
- After installing the timing belt, retorque the crankshaft pulley bolt to 250 N·m (25.0 kg-m, 181 lb-ft).
- Refer to page 6-29 for timing belt removal.

After installation, adjust the tension of each belt.
- See section 23 for alternator belt tension adjustment.
- See section 17 for power steering pump belt tension adjustment.
- See section 22 for air conditioner compressor belt tension adjustment.

Valve Clearance

Adjustment

NOTE:
- The valves should be adjusted when the cylinder head temperature is less than 100°F (38°C).
- After adjusting, retorque the crankshaft pulley bolt to 250 N·m (25.0 kg-m, 181 lb-ft).

1. Remove the cylinder head cover.

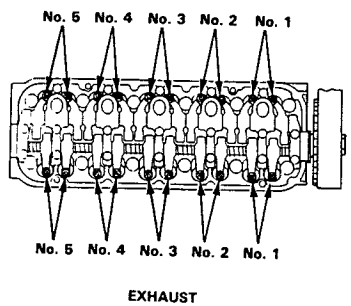

2. Align the No. 1 piston TDC mark with the TDC groove on the No. 1 camshaft holder as shown.

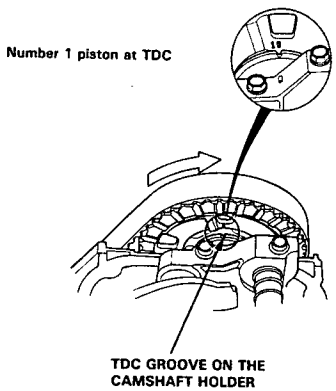

3. Adjust the valves on No. 1 cylinder.

Intake: 0.26 ± 0.02 mm (0.010 ± 0.001 in)
Exhaust: 0.30 ± 0.02 mm (0.012 ± 0.001 in)

4. Loosen the locknut and turn the adjustment screw until the feeler gauge slides back and forth with a slight amount of drag.

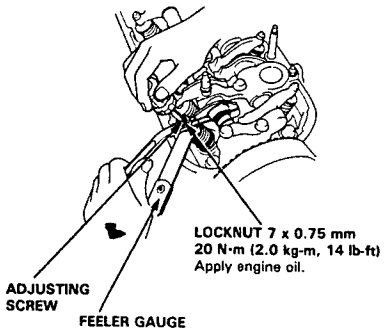

5. Tighten the locknut and check the clearance again. Repeat adjustment if necessary.

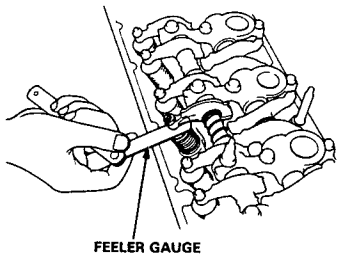

(cont'd)

Timing Belt

Adjustment (cont'd)

6. Rotate the crankshaft 144° counterclockwise (camshaft pulley turns 72°). Align the No. 2 piston TDC mark with the TDC groove on the No. 1 camshaft holder. Adjust the valves on No. 2 cylinder.

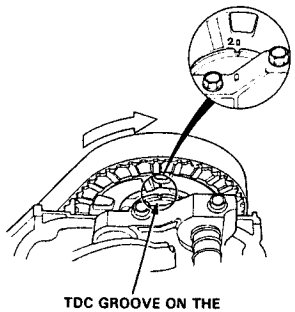

7. Rotate the crankshaft 144° counterclockwise (camshaft pulley turns 72°). Align the No. 4 piston TDC mark with the TDC groove on the No. 1 camshaft holder. Adjust the valves on No. 4 cylinder.

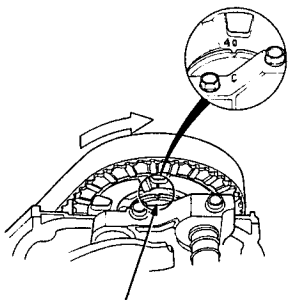

8. Rotate the crankshaft 144° counterclockwise (camshaft pulley turns 72°). Align the No. 5 piston TDC mark with the TDC groove on the No. 1 camshaft holder. Adjust the valves on No. 5 cylinder.

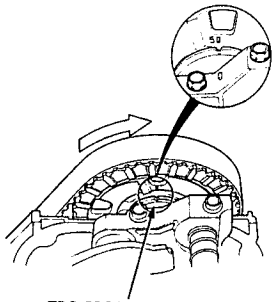

9. Rotate the crankshaft 144° counterclockwise (camshaft pulley turns 72°). Align the No. 3 piston TDC mark with the TDC groove on the No. 1 camshaft holder. Adjust the valves on No. 3 cylinder.

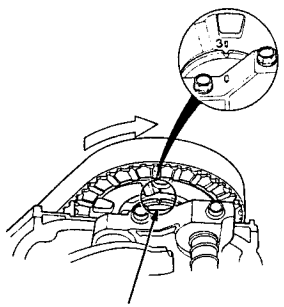

TDC/CKP/CYP Sensors

Replacement

NOTE: Turn the crankshaft so that the No. 1 piston is at top dead center (page 6-31).

1. Remove the upper cover.
2. Loosen the timing belt adjusting bolt 180°.
3. Push the tensioner to release tension from the belt, then retighten the adjusting bolt.
4. Remove the timing belt from the camshaft pulley.
5. Remove the CYP sensor.
6. Remove the camshaft pulley.
7. Remove the back cover.
8. Remove the TDC/CKP sensor from the cylinder head.
9. Install the TDC/CKP/CYP sensors in the reverse order of removal;
   - Refer to page 6-31 when installing the timing belt.

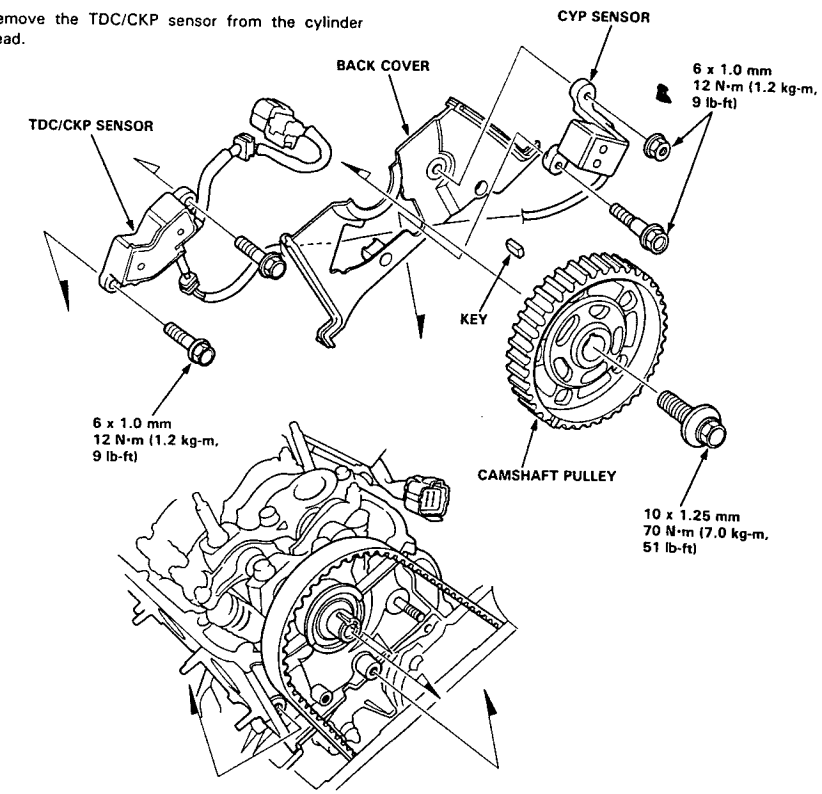

Engine Block

Special Tools 7-2
Illustrated Index 7-3
Flywheel and Drive Plate
  Replacement 7-6
Connecting Rod and Crankshaft
  End Play 7-6
Main Bearings
  Clearance 7-7
  Selection 7-8
Connecting Rod Bearings
  Clearance 7-7
  Selection 7-8
Pistons and Crankshaft
  Removal 7-9
Crankshaft
  Inspection 7-10
  Installation 7-19
Pistons
  Inspection 7-11
  Installation 7-19
Cylinder Block
  Inspection 7-12
  Bore Honing 7-13
Piston Pins
  Removal 7-14
  Inspection 7-15
  Installation 7-16
Connecting Rods
  Selection 7-14
Piston Rings
  End Gap 7-16
  Replacement 7-17
  Ring-to-Groove Clearance 7-17
  Alignment 7-18
Crankshaft Oil Seal
  Installation 7-18
  Installation (Engine removal not required) 7-22

Special Tools

Ref. No.	Tool Number	Description	Qty	Page Reference
①	07GAF–PH60300	Piston Pin Base Insert	1	7-14, 7-16
②	07GAF–PH70100	Pilot Collar	1	7-14, 7-16
③	07HAF–PL20102 or 07HAF–PL20101	Piston Base Head	1	7-14, 7-16
④	07LAB–PV00100	Ring Gear Holder	1	7-6
⑤	07LAD–PT3010A	Seal Driver	1	7-22
⑥	07749–0010000	Driver	1	7-18, 7-22
⑦	07948–SB00101	Driver Attachment, 76 x 80 mm	1	7-18, 7-22
⑧	07973–PE00310	Piston Pin Driver Shaft	1	7-14, 7-16
⑨	07973–PE00320	Piston Pin Driver Head	1	7-14, 7-16
⑩	07973–6570500	Piston Base	1	7-14, 7-16
⑪	07973–6570600	Piston Base Spring	1	7-14, 7-16

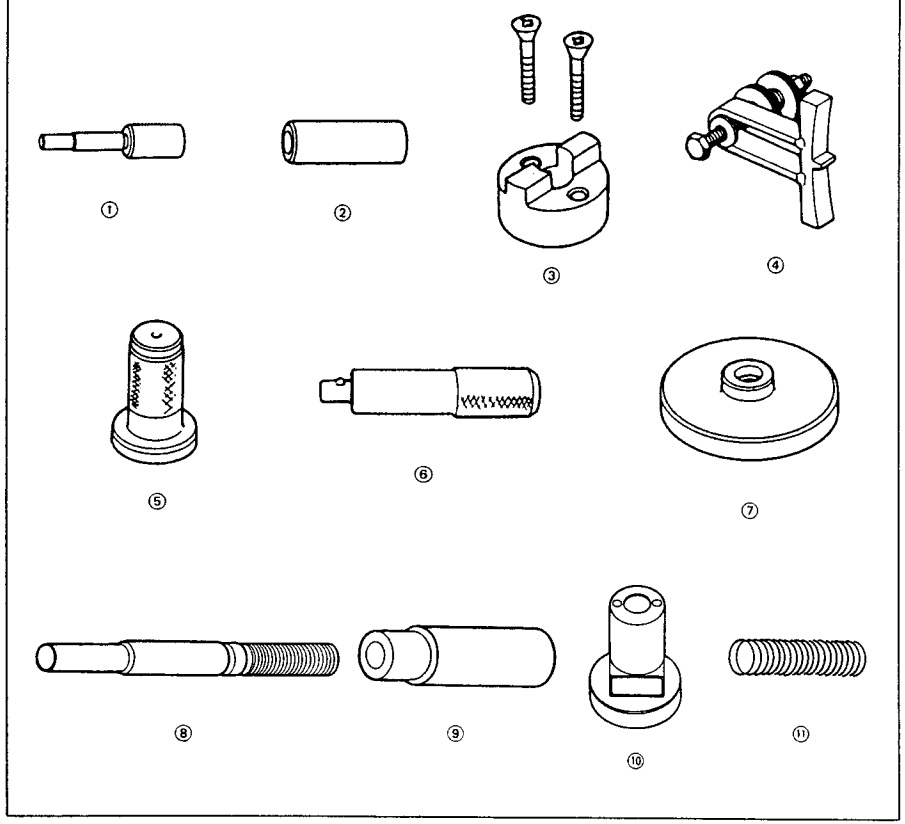

Illustrated Index

Lubricate all internal parts with engine oil during reassembly.

NOTE:
- Apply liquid gasket to the mating surfaces of the rear cover and oil pump case before installing them.
- Use liquid gasket, part No. 08718–0001.

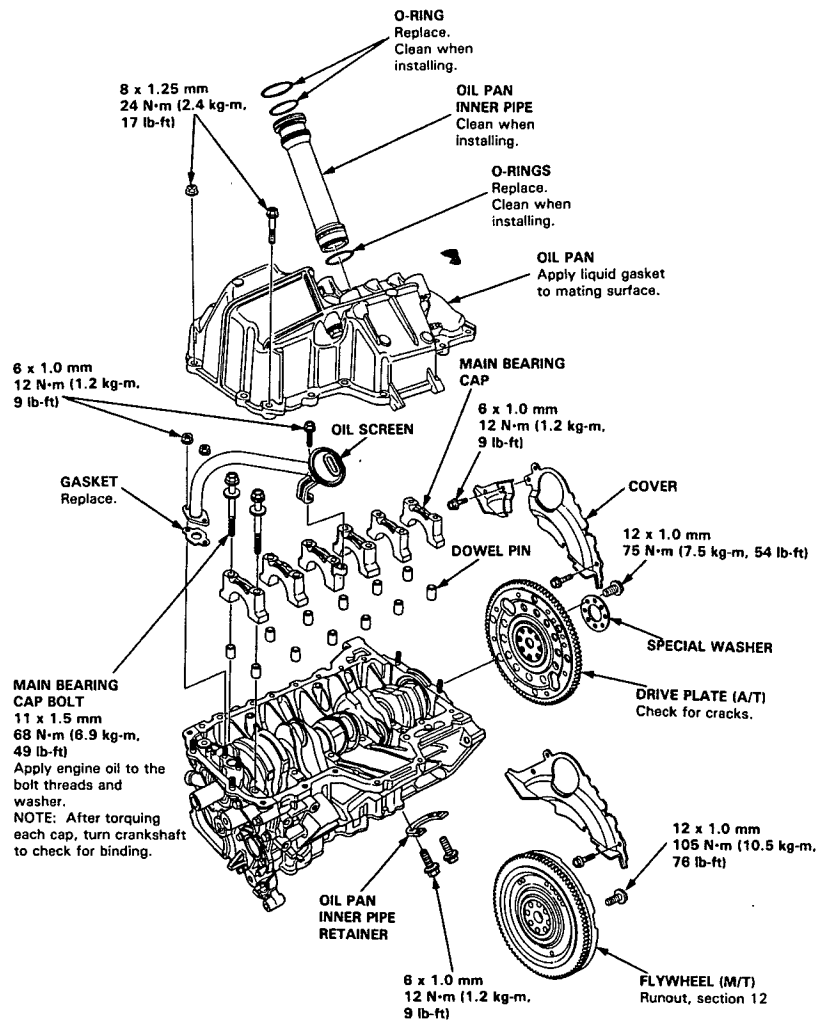

(cont'd)

Illustrated Index

(cont'd)

NOTE:
- Lubricate all internal parts with engine oil during reassembly.
- Use liquid gasket, Part No. 08718–0001.

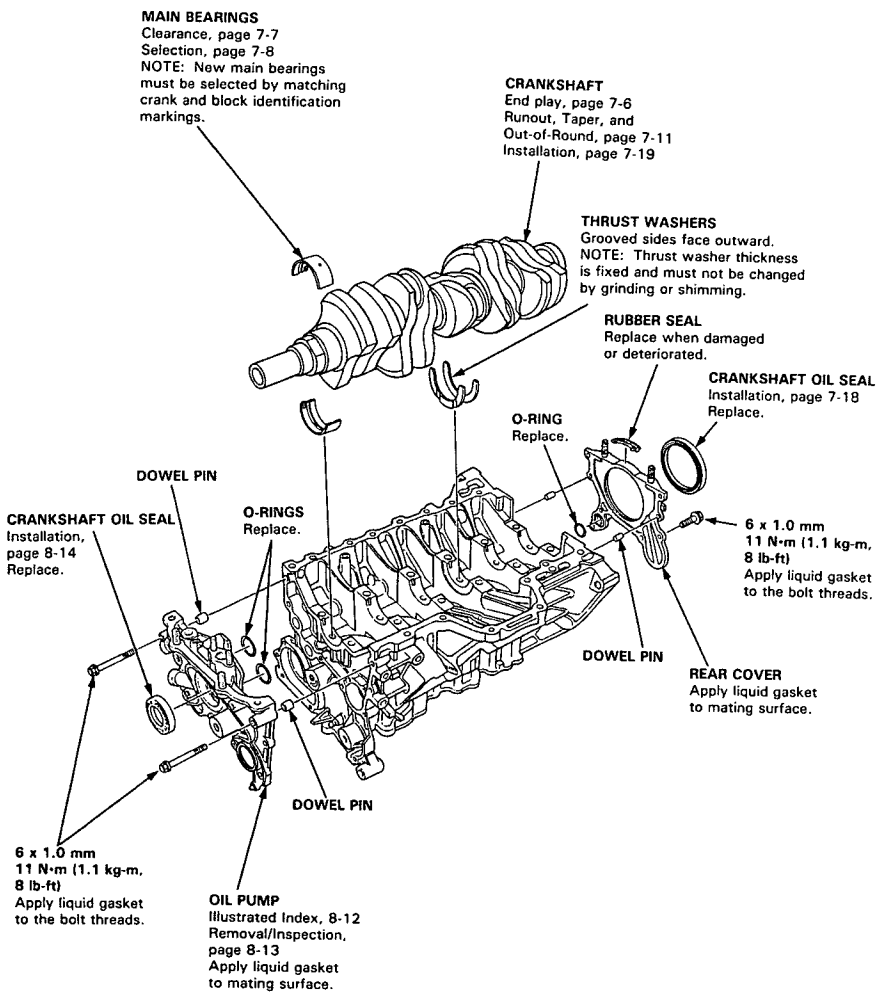

NOTE: New rod bearings must be selected by matching connecting rod assembly and crankshaft identification markings (page 7-8).

Lubricate all internal parts with engine oil during reassembly.

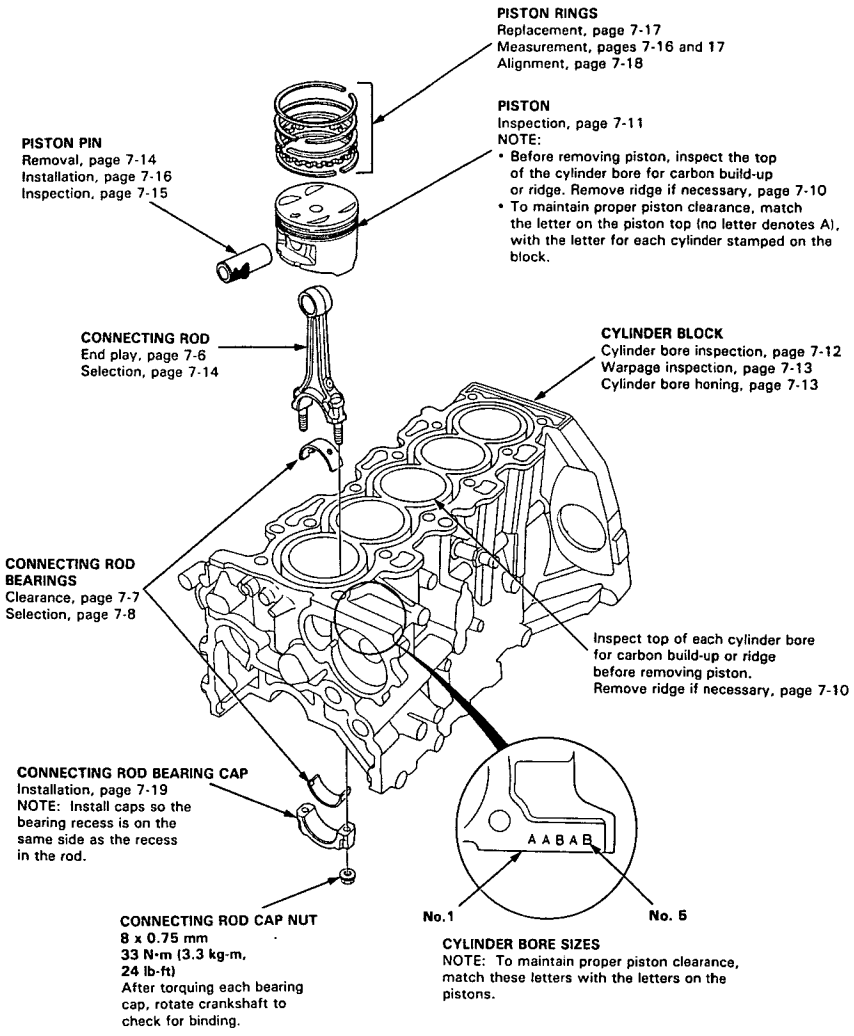

Flywheel and Drive Plate

Replacement

Manual Transmission:
Remove the eight flywheel bolts, then separate the flywheel from the crankshaft flange. After installation, tighten the bolts in a crisscross pattern.

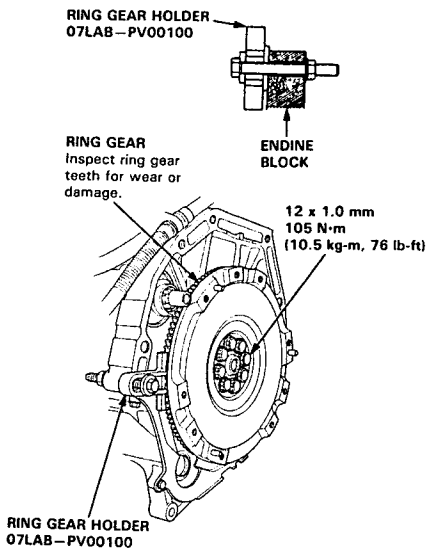

Automatic Transmission:
Remove the eight drive plate bolts, then separate the drive plate from the crankshaft flange. After installation, tighten the bolts in a crisscross pattern.

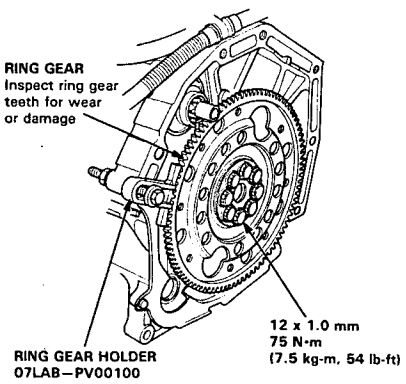

Connecting Rod and Crankshaft

End Play

Connecting Rod End Play:
Standard (New): 0.15–0.30 mm (0.006–0.012 in)
Service Limit: 0.40 mm (0.016 in)

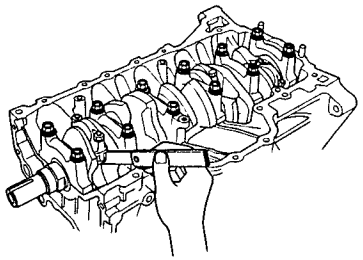

- If out-of-tolerance, install a new connecting rod.
- If still out-of-tolerance, replace the crankshaft (pages 7-9 and 7-19).

Push the crank firmly away from the dial indicator, and zero the dial against the end of the crank. Then pull the crank firmly back toward the indicator; dial reading should not exceed service limit.

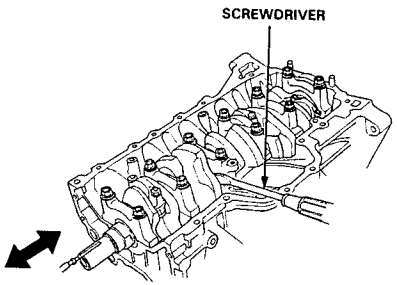

Crankshaft End Play:
Standard (New): 0.10–0.35 mm (0.004–0.014 in)
Service Limit: 0.45 mm (0.018 in)

- If end play is excessive, inspect the thrust washers and thrust surface on the crankshaft. Replace parts as necessary.

NOTE: Thrust washer thickness is fixed and must not be changed either by grinding or shimming. Thrust washers are installed with grooved side facing outward.

Main Bearings

Clearance

1. To check main bearing-to-journal oil clearance, remove the main caps and bearing halves.
2. Clean each main journal and bearing half with a clean shop towel.
3. Place one strip of plastigage across each main journal.
   NOTE: If the engine is still in the car when you bolt the main cap down to check clearance, the weight of the crankshaft and flywheel will flatten the plastigage further than just the torque on the cap bolt, and give you an incorrect reading. For an accurate reading, support the crankshaft with a jack under the counterweights and check only one bearing at a time.
4. Reinstall the bearings and caps, then torque the bolts.
   1st step: 30 N·m (3.0 kg-m, 22 lb-ft)
   Final step: 68 N·m (6.8 kg-m, 49 lb-ft)
   NOTE: Do not rotate the crankshaft during inspection.
5. Remove the cap and bearings again, and measure the widest part of the plastigage.
   Main Bearing-to-Journal Oil Clearance:
   Standard (New): 0.018–0.048 mm (0.0007–0.0019 in)
   Service Limit: 0.053 mm (0.0021 in)

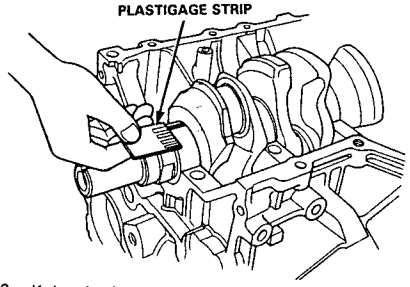

6. If the plastigage measures too wide or too narrow, (remove the engine if it's still in the car), remove the crankshaft, and remove the upper half of the bearing. Install a new, complete bearing with the same color code (select the color as shown on the next page), and recheck the clearance.
   CAUTION: Do not file, shim, or scrape the bearings or the caps to adjust clearance.
7. If the plastigage shows the clearance is still incorrect, try the next larger or smaller bearing (the color listed above or below that one), and check again.
   NOTE: If the proper clearance cannot be obtained by using the appropriate larger or smaller bearings, replace the crankshaft and start over.

Connecting Rod Bearings

Clearance

1. Remove the connecting rod cap and bearing half.
2. Clean the crankshaft rod journal and bearing half with a clean shop towel.
3. Place the plastigage across the rod journal.
4. Reinstall the bearing half and cap, and torque the nuts to 33 N·m (3.3 kg-m, 24 lb-ft).
   NOTE: Do not rotate the crankshaft during inspection.
5. Remove the rod cap and bearing half and measure the widest part of the plastigage.
   Connecting Rod Bearing-to-Journal Oil Clearance:
   Standard (New): 0.015–0.043 mm (0.0006–0.0017 in)
   Service Limit: 0.05 mm (0.002 in)

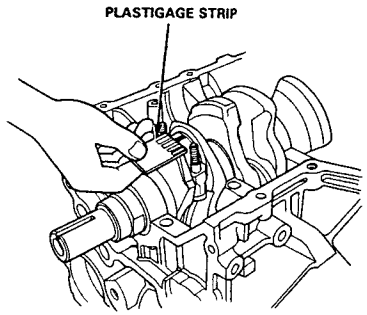

6. If the plastigage measures too wide or too narrow, remove the upper half of the bearing, install a new, complete bearing with the same color code (select the color as shown on the next page), and recheck the clearance.
   CAUTION: Do not file, shim, or scrape the bearings or the caps to adjust clearance.
7. If the plastigage shows the clearance is still incorrect, try the next larger or smaller bearing (the color listed above or below that one), and check clearance again.
   NOTE: If the proper clearance cannot be obtained by using the appropriate larger or smaller bearings, replace the crankshaft and start over.

Main Bearings

Selection

CAUTION: If the codes are indecipherable because of an accumulation of dirt and dust, do not scrub them with a wire brush or scraper. Clean them only with solvent or detergent.

Crankshaft Bore Code Location

Numbers Letters or Bars have been stamped on the end of the cylinder block as a code for the size of each of the 6 main journal bores.
Use them, and the numbers or bars stamped on the crank (codes for main journal size), to choose the correct bearings.

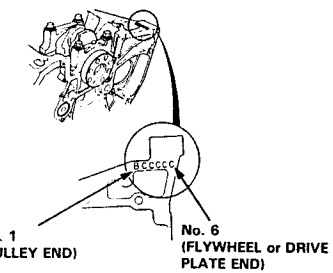

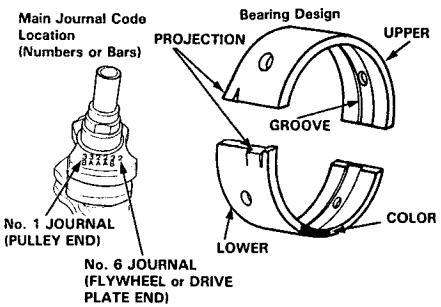

Bearing Identification
Color code is on the edge of the bearing.

→ Larger crank bore

1 or A or I	2 or B or II	3 or C or III	4 or D or IIII

→ Smaller bearing (Thicker)

1 or I	Red	Pink	Yellow	Green
2 or II	Pink	Yellow	Green	Brown
3 or III	Yellow	Green	Brown	Black
4 or IIII	Green	Brown	Black	Blue

Smaller main journal ↓ Smaller bearing (Thicker) ↓

Connecting Rod Bearings

Selection

CAUTION: If the codes are indecipherable because of an accumulation of dirt and dust, do not scrub them with a wire brush or scraper. Clean them only with solvent or detergent.

Connecting Rod Code Location

Numbers or Bars have been stamped on the side of each connecting rod as a code for the size of the big end. Use it, and the letters or bars stamped on the crank (codes for rod journal size), to choose the correct bearings.

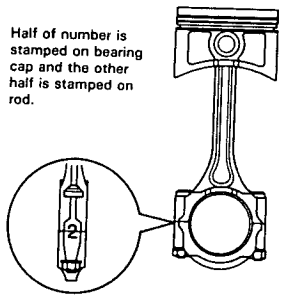

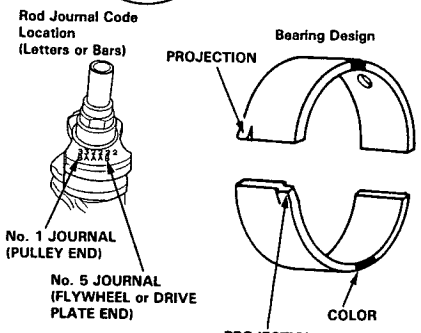

Bearing Identification
Color code is on the edge of the bearing.

→ Larger big end bore

1 or I	2 or II	3 or III	4 or IIII

→ Smaller bearing (Thicker)

A or I	Red	Pink	Yellow	Green
B or II	Pink	Yellow	Green	Brown
C or III	Yellow	Green	Brown	Black
D or IIII	Green	Brown	Black	Blue

Smaller rod journal ↓ Smaller bearing (Thicker) ↓

Pistons and Crankshaft

Removal

1. Remove the set plate, then remove the oil pan inner pipe.
2. Remove the oil pan assembly.
3. Remove the rear cover.

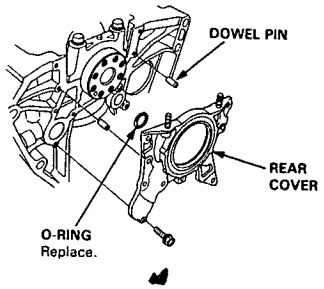

4. Remove the oil screen.
5. Remove the oil pump.

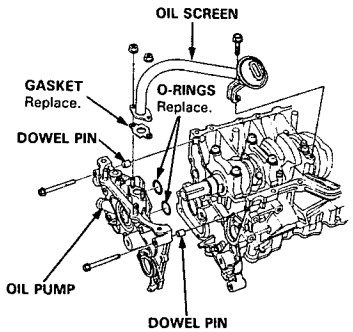

6. Remove the bolts and the bearing caps.

CAUTION: To prevent warpage, unscrew the bolts in sequence 1/3 turn at a time; repeat the sequence until all bolts are loosened.

MAIN BEARING CAP BOLTS LOOSENING SEQUENCE

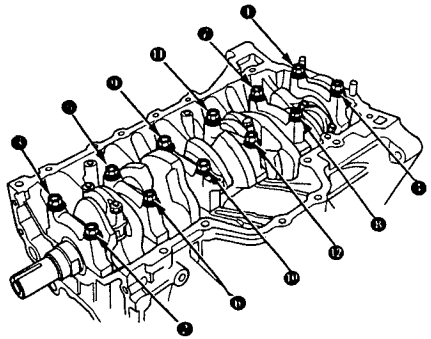

7. Remove the rod caps/bearings and main caps/bearings. Keep all caps/bearings in order.
8. Lift the crankshaft out of the engine, being careful not to damage journals.

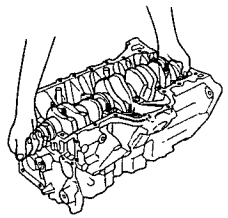

(cont'd)

Pistons and Crankshaft

Removal (cont'd)

9. Remove the upper bearing halves from the connecting rods and set them aside with their respective caps.

10. Reinstall the main caps and bearings on the engine in proper order.

11. If you can feel a ridge of metal or hard carbon around the top of each cylinder, remove it with a ridge reamer. Follow the reamer manufacturer's instructions.

    CAUTION: If the ridge is not removed, it may damage the pistons as they are pushed out.

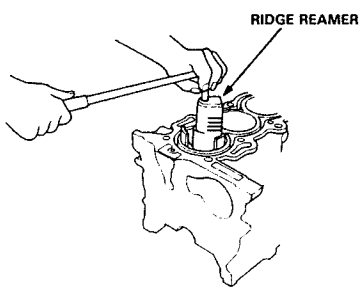

12. Use the wooden handle of a hammer to drive the pistons out.

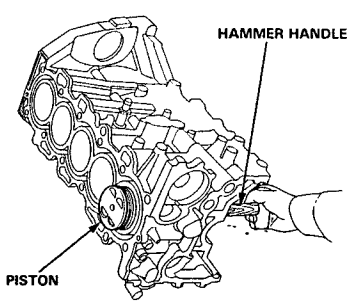

13. Reinstall the rod bearings and caps after removing each piston/connecting rod assembly.

14. Mark each piston/connecting rod assembly with its cylinder number to avoid mixup on reassembly.

    NOTE: The existing number on the connecting rod does not indicate its position in the engine, it indicates the rod bore size.

Crankshaft

Inspection

- Clean the crankshaft oil passages with pipe cleaners or a suitable brush.
- Check the keyway and threads.

Alignment

- Measure runout on all main journals to make sure the crankshaft is not bent.
- The difference between measurements on each journal must not be more than the service limit.

Crankshaft Total Indicated Runout:
Standard (New): 0.03 mm (0.001 in) max.
Service Limit: 0.04 mm (0.002 in)

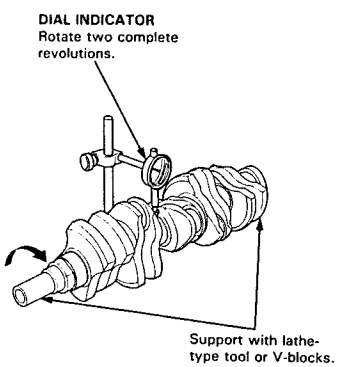

Out-of-Round and Taper

- Measure out-of-round at the middle of each rod and main journal in two places.
- The difference between measurements on each journal must not be more than the service limit.

Journal Out-of-Round:
Standard (New): 0.005 mm (0.0002 in) max.
Service Limit: 0.010 mm (0.0004 in)

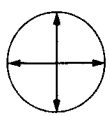

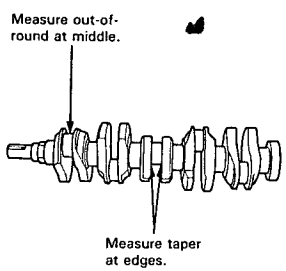

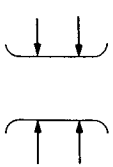

- Measure taper at edges of each rod and main journal.
- The difference between measurements on each journal must not be more than the service limit.

Journal Taper:
Standard (New): 0.005 mm (0.0002 in) max.
Service Limit: 0.010 mm (0.0004 in)

Pistons

Inspection

1. Check the piston for distortion or cracks.

   NOTE: If cylinder is bored, an oversized piston must be used.

2. Measure piston diameter at a point 21.0 mm (0.83 in) from bottom of skirt.

   NOTE: There are two standard-size pistons (No letter (A) or B). The letter is stamped on the top of the piston. These letters are also stamped on the cylinder block as cylinder bore sizes (page 7-5).

Piston Diameter

	Standard (New)	Service Limit
No Letter (A)	84.980–84.990 mm (3.3457–3.3461 in)	84.970 mm (3.3453 in)
B	84.970–84.980 mm (3.3453–3.3457 in)	84.960 mm (3.3449 in)

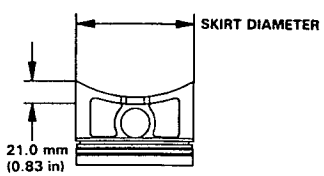

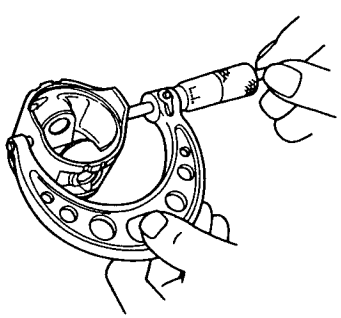

(cont'd)

Pistons

Inspection (cont'd)

3. Calculate difference between cylinder bore diameter in right column and piston diameter.

Piston-to-Block Clearance
Standard (New): 0.010–0.040 mm (0.0004–0.0016 in)
Service Limit: 0.05 mm (0.002 in)

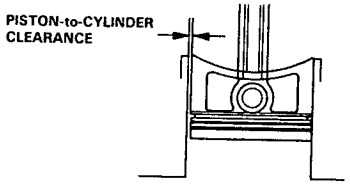

Oversize Piston Diameter
0.25: 85.230–85.240 mm (3.3555–3.3559 in)
0.50: 85.480–85.490 mm (3.3653–3.3657 in)

Cylinder Block

Inspection

1. Measure wear and taper in directions X and Y at three levels in each cylinder as shown.

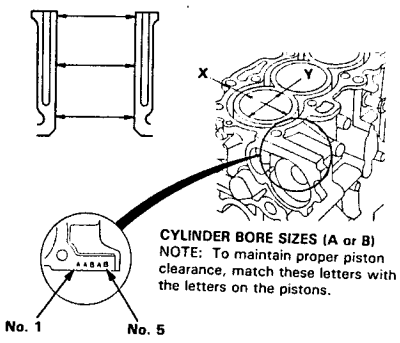

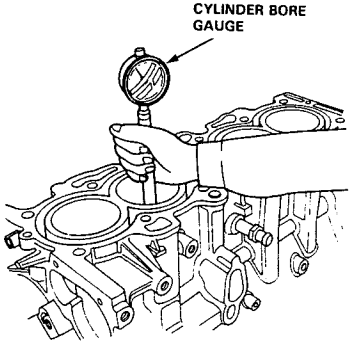

Cylinder Bore Size

	Standard (New)	Service Limit
A	85.010–85.020 mm (3.3468–3.3472 in)	85.070 mm (3.3492 in)
B	85.000–85.010 mm (3.3465–3.3468 in)	85.070 mm (3.3492 in)

Oversize
0.25: 85.250–85.270 mm (3.3563–3.3571 in)
0.50: 85.500–85.520 mm (3.3661–3.3669 in)

Bore Taper
Limit: (Difference between first and third measurement) 0.05 mm (0.002 in)

- If measurements in any cylinder are beyond oversize bore service limit, replace the cylinder block.
- If block is to be rebored, refer to Piston Clearance Inspection (page 7-11) after reboring.

NOTE: Scored or scratched cylinder bores must be honed.

Reboring Limit: 0.5 mm (0.02 in)

2. Check the top of the cylinder block for warpage. Measure along the edges and across the center as shown.

SURFACES TO BE MEASURED

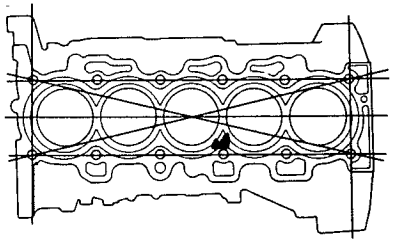

Cylinder Block Warpage:
Standard (New): 0.07 mm (0.003 in) max.
Service Limit: 0.10 mm (0.004 in)

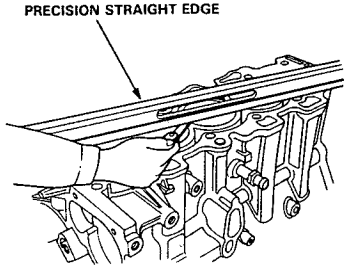

Bore Honing

NOTE: Only scored or scratched cylinder bores must be honed.

1. Measure cylinder bores as shown on page 7-12. If the cylinder block is to be re-used, hone the cylinders and remeasure the bores.

2. Hone cylinder bores with honing oil and a fine (400 grit) stone in a 60 degree cross-hatch pattern.

NOTE:
- Use only a rigid hone with 400 grit or finer stone such as Sunnen, Ammco, or equivalent.
- Do not use stones that are worn or broken.

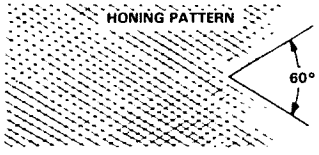

3. When honing is complete, thoroughly clean the cylinder block of all metal particles. Wash the cylinder bores with hot soapy water, then dry and oil immediately to prevent rusting.

NOTE: Never use solvent, it will only redistribute the grit on the cylinder walls.

4. If scoring or scratches are still present in cylinder bores after honing to service limit, rebore the cylinder block.

NOTE: Some light vertical scoring and scratching is acceptable if it is not deep enough to catch your fingernail and does not run the full length of the bore.

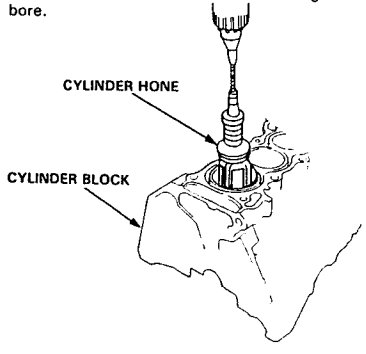

Piston Pins

Removal

1. Assemble the special tool as shown.

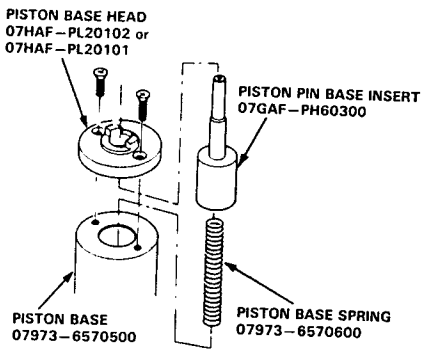

2. Adjust the length of piston pin driver to 51.5 mm (2.03 in) as shown.

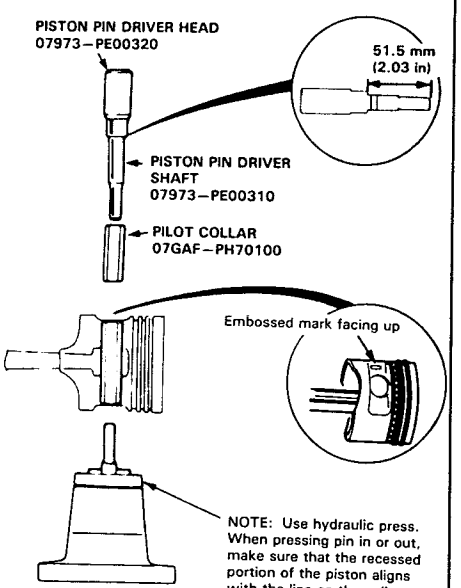

3. Place the piston on the special tool and press the pin out with a hydraulic press.

Connecting Rods

Selection

Each rod is sorted into one of four tolerance ranges (from 0 to 0.024 mm (0.0009 in), in 0.006 mm (0.0002 in) increments) depending on the size of its big end bore. It's then stamped with a number (1, 2, 3, 4 or 5) indicating that tolerance. You may find any combination of 1, 2, 3, 4 or 5 in any engine.

Normal Bore Size: 48.0 mm (1.89 in)

NOTE:
- Reference numbers are for big end bore size and do NOT indicate the position of rod in engine.
- Inspect connecting rod for cracks and heat damage.

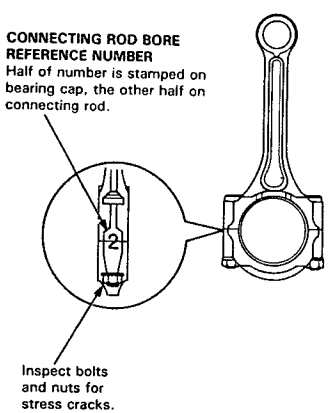

Piston Pins

Inspection

1. Measure the diameter of the piston pin.

Piston Pin Diameter:
Standard (New): 21.994–22.000 mm (0.8659–0.8661 in)
Oversize: 21.997–22.003 mm (0.8660–0.8663 in)

NOTE: All replacement piston pins are oversize.

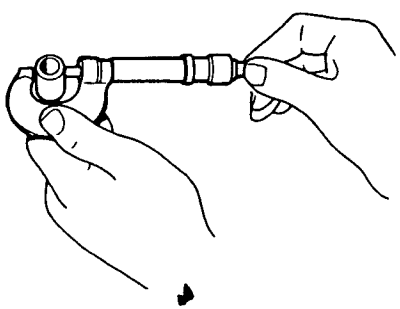

2. Zero the dial indicator to the piston pin diameter.

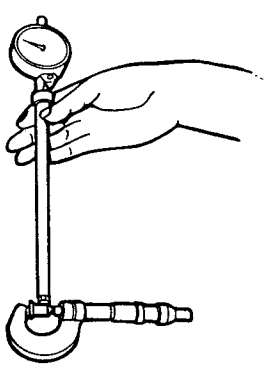

3. Measure the piston pin-to-piston clearance.

NOTE: Check the piston for distortion or cracks.

If the piston pin clearance is greater than 0.024 mm (0.0009 in), remeasure using an oversize piston pin.

Piston Pin-to-Piston Clearance:
Standard (New): 0.012–0.024 mm (0.0005–0.0009 in)

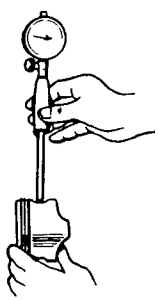

4. Check the difference between piston pin diameter and connecting rod small end diameter.

Piston Pin-to-Connecting Rod Interference:
Standard (New): 0.013–0.032 mm (0.0005–0.0013 in)

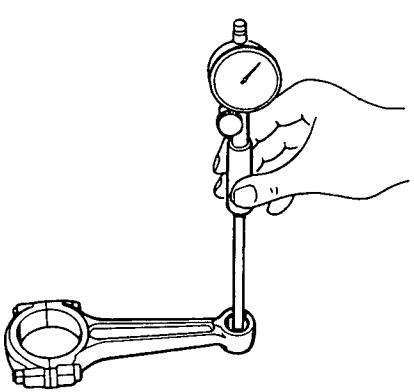

Piston Pins

Installation

1. Use a hydraulic press for installation.

   - When pressing pin in or out, be sure you position the recessed flat on the piston against the lugs on the base attachment.

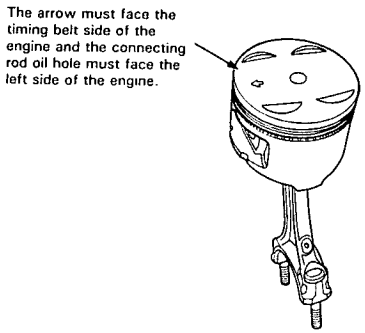

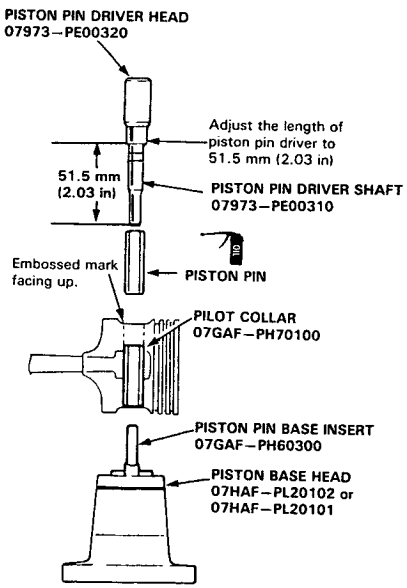

NOTE: Install the assembled piston and rod with the oil hole facing the left side of the engine.

Piston Rings

End Gap

1. Using a piston, push a new ring into the cylinder bore 15–20 mm (0.6–0.8 in) from the bottom.

2. Measure the piston ring end-gap with a feeler gauge:

   - If the gap is too small, check to see if you have the proper rings for your engine.

   - If the gap is too large, recheck the cylinder bore diameter against the wear limits on page 7-12. If the bore is over limit, the cylinder block must be rebored.

Piston Ring End-Gap:

Top Ring
Standard (New): 0.20–0.35 mm (0.008–0.014 in)
Service Limit: 0.60 mm (0.024 in)

Second Ring
Standard (New): 0.40–0.55 mm (0.016–0.022 in)
Service Limit: 0.70 mm (0.028 in)

Oil Ring
Standard (New): 0.20–0.70 mm (0.008–0.028 in)
Service Limit: 0.80 mm (0.031 in)

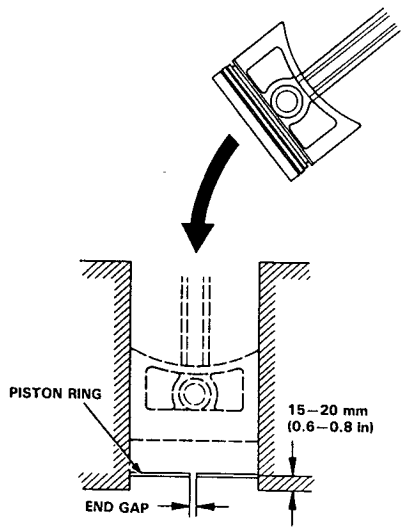

Replacement

1. Using a ring expander, remove the old piston rings.

2. Clean all ring grooves thoroughly.

   NOTE:
   - Use a squared-off broken ring or ring groove cleaner with blade to fit piston grooves. File down blade if necessary.
   - Compression ring grooves are 1.2 mm (0.05 in) wide and oil ring groove is 2.8 mm (0.11 in) wide.

   CAUTION: Do not use a wire brush to clean ring lands, or cut ring lands deeper with cleaning tool.

   NOTE: If piston is to be separated from connecting rod, do not install new rings yet.

3. Install new rings in proper sequence and position (page 7-18).

   NOTE: Do not reuse old piston rings.

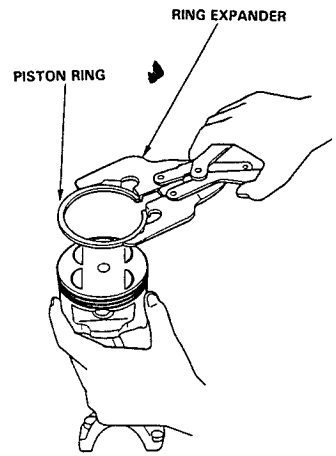

Ring-to-Groove Clearance

After installing a new set of rings, measure ring-to-groove clearance:

Top Ring Clearance
Standard (New): 0.035–0.060 mm (0.0014–0.0024 in)
Service Limit: 0.13 mm (0.005 in)

Second Ring Clearance
Standard (New): 0.030–0.055 mm (0.0012–0.0022 in)
Service Limit: 0.13 mm (0.005 in)

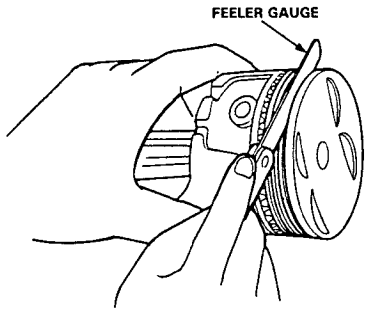

Piston Rings

Alignment

1. Install the rings as shown on page 7-17.

   Identify top and second rings by the chamfer on the edge, and make sure they are in proper grooves on piston.

   NOTE: The manufacturing marks must be facing upward.

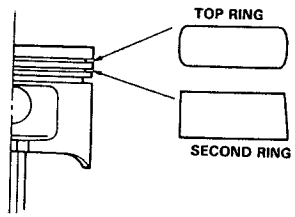

2. Rotate the rings in grooves to make sure they do not bing.

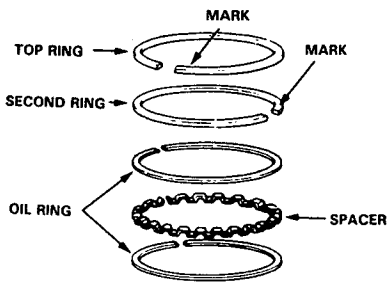

3. Position the ring end gaps as shown:

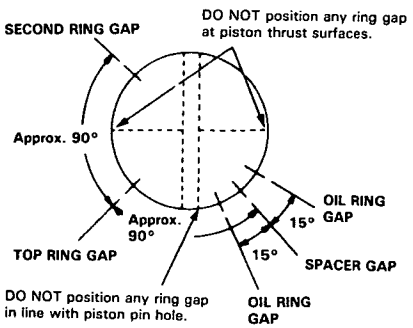

Crankshaft Oil Seal

Installation

The seal surface on the block should be dry.
Apply a light coat of oil to the crankshaft and to the lip of seal.

1. Drive the crankshaft oil seal into the rear cover.

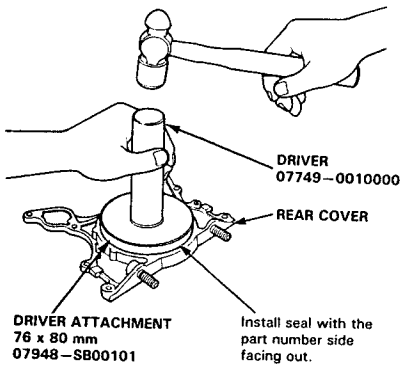

2. Confirm clearance is equal all the way around with a feeler gauge.

   Clearance: 0.5–0.8 mm (0.02–0.03 in)

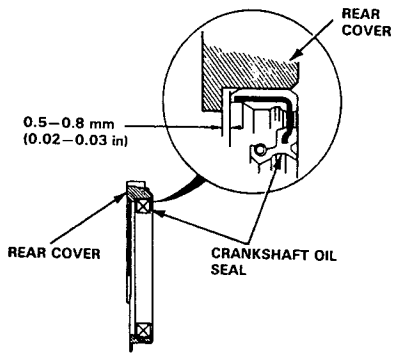

NOTE: Refer to page 8-14 for installation of the oil pump side crankshaft oil seal.

Pistons

Installation

Before installing the piston, apply a coat of engine oil to the ring grooves and cylinder bores.

1. If the crankshaft is already installed:
   - Remove the connecting rod caps and slip short sections of rubber hose over the threaded ends of the connecting rod bolts.
   - Install the ring compressor, check that the bearing is securely in place, then position the piston in the cylinder and tap it in using the wooden handle of a hammer.
   - Stop after the ring compressor pops free and check the connecting rod-to-crank journal alignment before putting piston into place.
   - Install the rod caps with bearings, and torque the nuts to 33 N·m (3.3 kg-m, 24 lb-ft)
2. If the crankshaft is not installed:
   - Remove the rod caps and bearings, install the ring comressor, then position the piston in the cylinder and tap it in using the wooden handle of a hammer.
   - Position all pistons at top dead center.

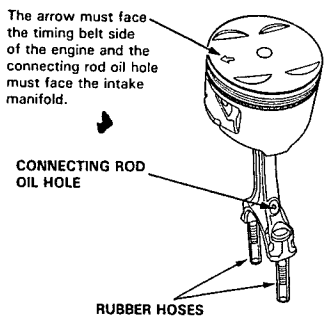

NOTE: Maintain downward force on the ring compressor to prevent rings from expanding before entering the cylinder bore.

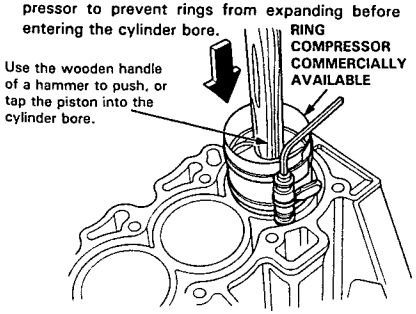

Crankshaft

Installation

Before installing the crankshaft, apply a coat of engine oil to the main bearings and rod bearings.

1. Insert bearing halves in the cylinder block and connecting rods.
2. Lower the crankshaft into the cylinder block, seating the rod journals into connecting rods No. 1, No. 2 and No. 5. Install the rod caps and nuts finger-tight.

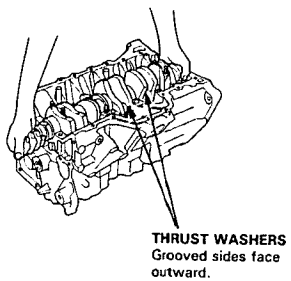

3. Rotate the crankshaft clockwise, seat journals into connecting rods No. 3 and No. 4, and install the rod caps and nuts finger tight.

   NOTE: Install caps so the bearing recess is on the same side as the recess in the rod.

4. Check rod bearing clearance with plastigage (page 7-7), then torque the capnuts.
   33 N·m (3.3 kg-m, 24 lb-ft)

   NOTE: Reference numbers on connecting rod are for big-end bore tolerance and do not indicate the position of piston in the engine.

5. Install the thrust washers on the No. 4 journal. Oil the thrust washer surfaces.

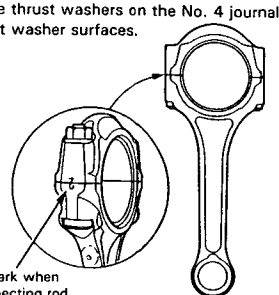

(cont'd)

Crankshaft

Installation (cont'd)

6. Install the main bearing caps.
   Check clearance with plastigage (page 7-7), then tighten the bearing cap bolts in 2 steps.
   In the first step, tighten all bolts in sequence to about 30 N·m (3.0 kg-m, 22 lb-ft); in the final step, tighten in same sequence to 68 N·m (6.8 kg-m, 49 lb-ft).

   NOTE: Coat the bolt threads with oil.

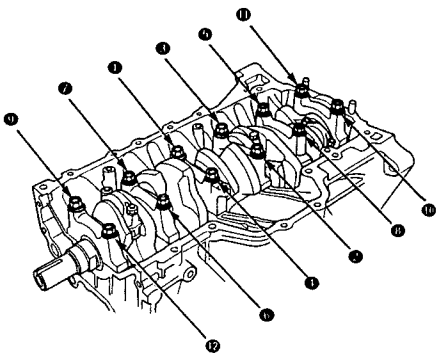

7. Apply liquid gasket to the engine block mating surface of the rear cover, then install it on the engine block.

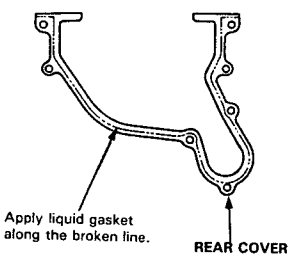

NOTE:
- Use liquid gasket, Part No. 08718–0001.
- Check that the mating surfaces are clean and dry before applying liquid gasket.

- Apply liquid gasket as an even bead, centered between edges of the mating surface.
- To prevent leakage of oil, apply liquid gasket to the inner threads of the bolt holes.
- Do not apply liquid gasket to O-ring grooves.
- Do not install the parts if 20 minutes or more have elapsed since applying liquid gasket. Instead, reapply liquid gasket after removing old residue.
- After assembly, wait at least 30 minutes before filling the engine with oil.
- Apply a light coat of oil to the crankshaft and to the lip of seal.
- Use a new O-ring and apply oil when installing it.

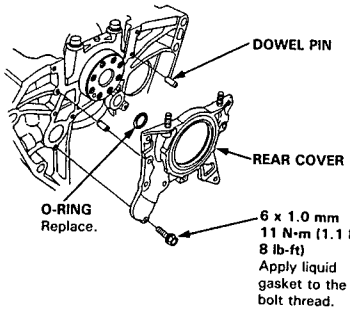

8. Apply liquid gasket to the engine block mating surface of the oil pump, then install it on the engine block.

   NOTE: Do not apply liquid gasket to O-ring grooves.

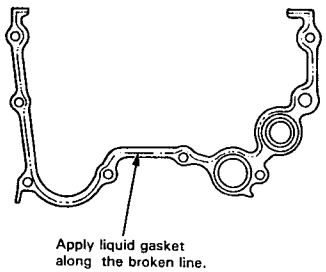

NOTE:
- Apply a light coat of oil to the crankshaft and to the lip of seal.
- Use new O-rings and apply oil when installing them.

9. Install the oil screen

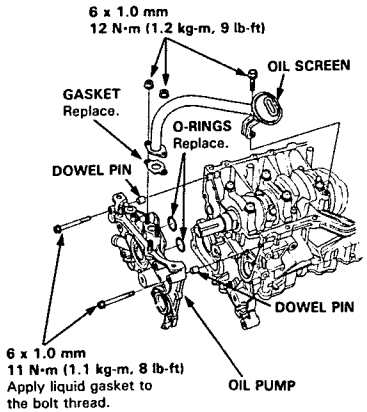

10. Apply liquid gasket to the cylinder block, then install the oil pan.

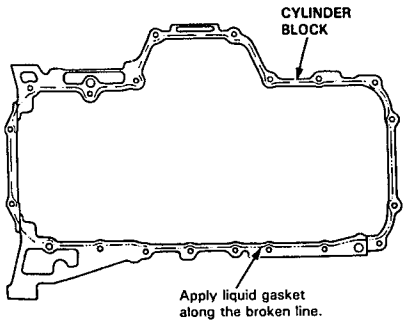

11. Tighten the oil pan bolts and nuts as shown.

    8 x 1.25 mm
    2.4 N·m (2.4 kg-m, 17 lb-ft)

OIL PAN BOLT TORQUE SEQUENCE

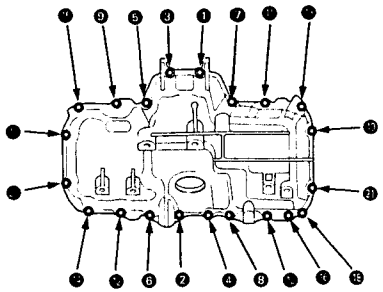

12. Install the oil pan inner pipe, then install the retainer.

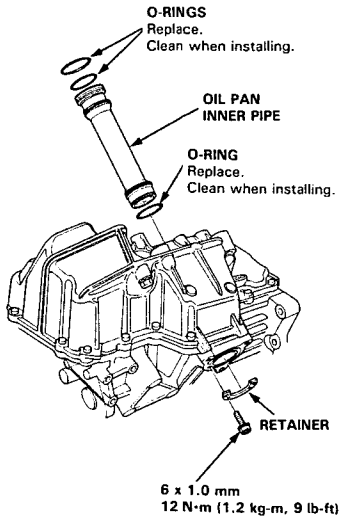

Crankshaft Oil Seals

Installation (Engine removal not required)

NOTE: The crankshaft oil seal housing surface should be dry.
Apply a light coat of grease to the crankshaft and to the lips of the seals.

1. Using the special tool, drive in the crankshaft oil seal until the driver bottoms against the oil pump. When the seal is in place, clean any excess grease off the crankshaft and check that the crankshaft oil seal lip is not distorted.

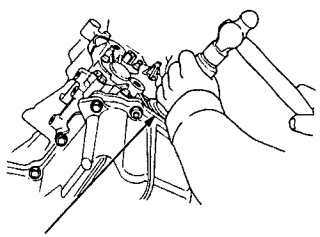

SEAL DRIVER
07LAD–PT3010A
Install seal with the part number side facing out.

2. Measure the flywheel-end seal thickness and the oil seal housing depth. Using the special tool, drive the crankshaft oil seal into the rear cover to the point where the clearance between the bottom of the crankshaft oil seal and the rear cover is 0.5–0.8 mm (0.02–0.03 in) (page 7-18).

NOTE: Align the hole in the driver attachment with the pin on the crankshaft.

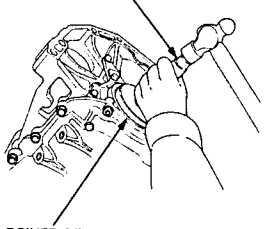

DRIVER
07749–0010000

DRIVER ATTACHMENT
76 x 80 mm
07948–SB00101
Install seal with the part number side facing out.

Engine Lubrication

Special Tools 8-2
Illustrated Index 8-3
Engine Oil
  Inspection 8-4
  Replacement 8-4
Engine Oil Filter
  Replacement 8-5
Oil Pressure
  Testing 8-6
Oil Pan
  Removal 8-7
  Installation 8-10
Oil Pump
  Illustrated Index 8-12
  Removal/Inspection/Installation 8-13

Engine Lubrication

Special Tools 8-2
Illustrated Index 8-3
Engine Oil
  Inspection 8-4
  Replacement 8-4
Engine Oil Filter
  Replacement 8-5
Oil Pressure
  Testing 8-6
Oil Pan
  Removal 8-7
  Installation 8-10
Oil Pump
  Illustrated Index 8-12
  Removal/Inspection/Installation 8-13

Special Tools

Ref. No.	Tool Number	Description	Qty	Page Reference
①	07LAC–PW50101	Extension Shaft Puller	1	8-8
②	07746–0010400	Driver Attachment, 52 x 55 mm	1	8-14
③	07749–0010000	Driver	1	8-14
④	07912–6110001	Oil Filter Wrench	1	8-5

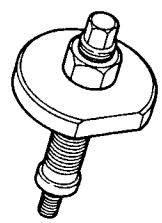

①

②

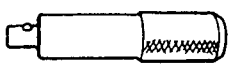

③

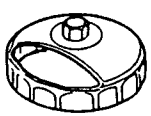

④

Illustrated Index

NOTE:
- Use new O-rings when reassembling.
- Apply oil to O-rings before installation.
- Use liquid gasket, Part No. 08718–0001.
- Clean the oil control orifice when installing.

CAUTION: Do not overtighten the drain bolt.

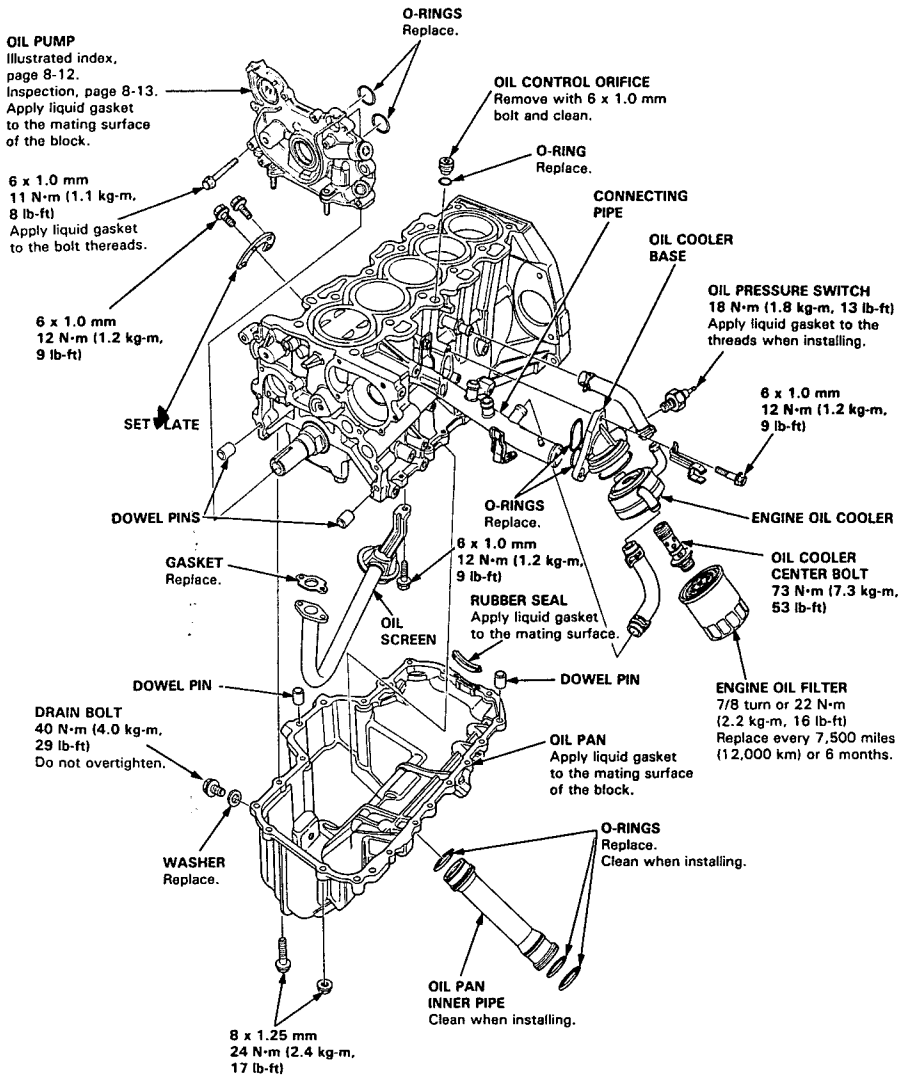

Engine Oil

Inspection

1. Check engine oil with the engine off and the car parked on level ground.
2. Make certain that the oil level indicated on the dipstick is between the upper and lower marks.
3. If the level has dropped close to the lower mark, add oil until it reaches the upper mark.

   CAUTION: Insert the dipstick carefully to avoid bending it.

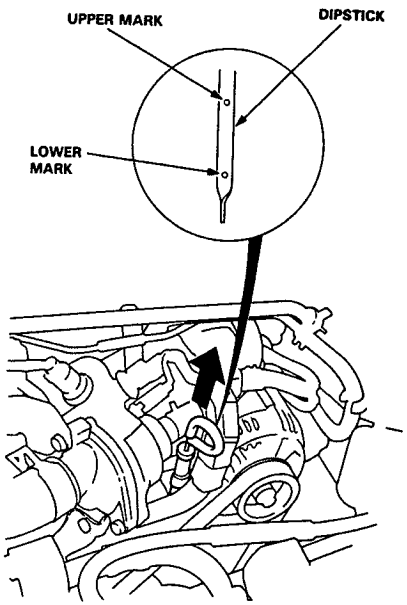

Replacement

CAUTION: Remove the drain bolt carefully. Hot oil may cause scalding.

1. Warm up the engine.
2. Drain the engine oil.

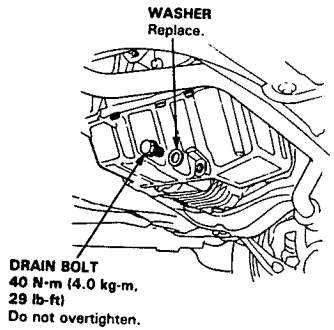

3. Reinstall the drain plug with a new washer, and refill with the recommended oil.

   CAUTION: Do not overtighten the drain bolt.

Requirement	API Service Grade: Use "Energy Conserving II" SG grade oil SAE 5W–30 preferred
Capacity	4.3 ℓ (4.5 US qt, 3.8 Imp qt) at change, including filter. 5.2 ℓ (5.5 US qt, 4.6 Imp qt) after engine overhaul.
Change	Every 7,500 miles (12,000 km) or 6 months whichever comes first.

Engine Oil Viscosity for Outside Temperature Ranges.

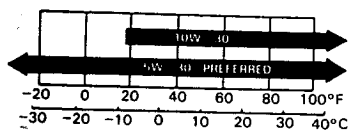

NOTE:
- Oil filter should be replaced at each oil change.

4. After refilling the engine oil, install and tighten the oil filler cap.

Engine Oil Filter

Replacement

CAUTION: After the engine has been run, the exhaust pipes will be hot; be careful when working around the exhaust manifold.

1. Remove the oil filter with the special oil filter socket.
2. Inspect the threads and rubber seal on the new filter.
   Wipe off seat on engine block, then apply a light coat of oil to the filter rubber seal.

   NOTE: Use only filters with a built-in bypass system.

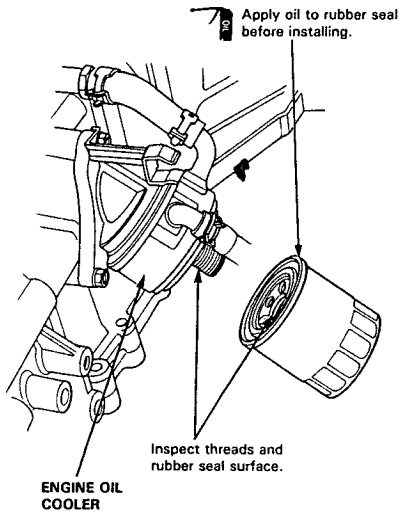

3. Install the oil filter by hand.
4. After the rubber seal is seated, tighten the oil filter clockwise with the special tool.

   Tighten: 7/8 turn clockwise.
   Tightening torque: 22 N·m (2.2 kg-m, 16 lb-ft)

   CAUTION: Installation using other than the above procedure could result in serious engine damage due to oil leakage.

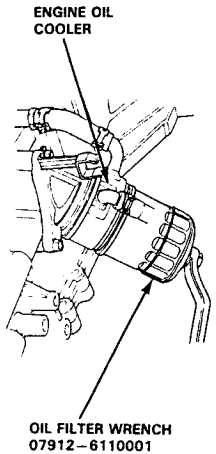

(cont'd)

Engine Oil Filter

Replacement (cont'd)

Eight numbers (1 to 8) are printed on the surface of the filter.

The following explains the procedure for tightening filters using these numbers.

1) Make a mark on the cylinder block under the number that shows at the bottom of the filter when the rubber seal is seated.

2) Tighten the filter by turning it clockwise seven numbers from the marked point. For example, if a mark is made under the number 2 when the rubber seal is seated, the filter should be tightened until the number 1 comes up to the marked point.

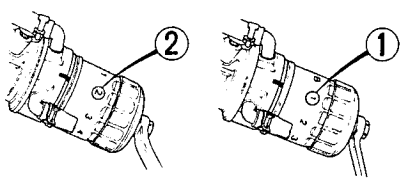

Number when rubber seal is seated. Number after tightening.

Number when rubber seal is seated	1	2	3	4	5	6	7	8
Number after tightening	8	1	2	3	4	5	6	7

5. After installation, fill the engine with oil up to the specified level, run the engine for more than 3 minutes, then check for oil leakage.

Oil Pressure

Testing

If the oil pressure warning light stays on with the engine running, check the engine oil level. If the oil level is correct:

1. Connect a tachometer.
2. Remove the oil pressure switch and install an oil pressure gauge.
3. Start the engine. Shut it off immediately if the gauge registers no oil pressure. Repair the problem before continuing.
4. Allow the engine to reach operating temperature (fan comes on at least twice). The pressure should be:

Engine Oil Temperature: 176°F (80°C)

Engine Oil Pressure:
At Idle: 70 kPa (0.7 kg/cm², 10 psi) minimum
At 3,000 rpm: 350 kPa (3.5 kg/cm², 50 psi) minimum

- If oil pressure is within specifications, replace the oil pressure switch and recheck.
- If oil pressure is NOT within specifications, inspect the oil pump (pages 8-13).

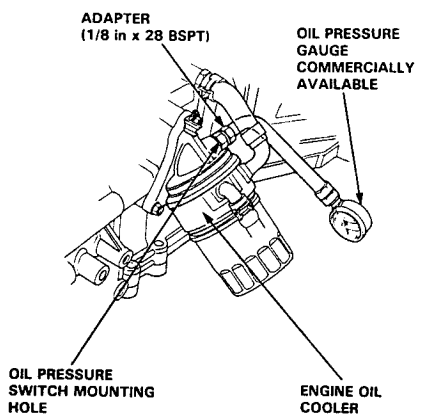

Oil Pan

Removal

Engine removal is not required in this procedure.

⚠WARNING
- **Make sure jacks and safety stands are placed properly and hoist brackets are attached to the correct positions on the engine (page 1-6).**
- **Apply parking brake and block rear wheels so the car will not roll off stands while you are working under it.**

CAUTION:
- **Use fender covers to avoid damaging painted surfaces.**
- **Disconnect wiring connectors carefully to avoid damage.**
- **Mark the wiring and hoses to avoid misconnection. Be sure they do not contact other wiring or hoses or interfere with other parts.**

NOTE: Anti-theft radios have a coded theft protection circuit. Be sure to get the customer's code number before:
– Disconnecting the battery.
– Removing the No. 39 (10 A) fuse in the under-hood fuse/relay box.
– Removing the radio.
After service, reconnect power to the radio and turn it on.
When the word "CODE" is displayed, enter the customer's 5-digit code to restore radio operation.

1. Disconnect the battery negative terminal first then the positive terminal.
2. Remove the radiator cap.

   ⚠WARNING Use care when removing the radiator cap to avoid scalding by hot engine coolant or steam.
3. Remove the front wheels.
4. Remove the damper forks.
5. Disconnect the suspension lower arm ball joints with the special tool. Refer to section 18 for the proper procedure.
6. Remove the driveshafts.

   NOTE: Coat all precision finished surfaces with clean engine oil or grease. Tie plastic bags over the driveshaft ends.
7. Remove the air cleaner housing.
8. Drain the engine oil. Reinstall the drain bolt using a new washer.

   CAUTION: Do not overtighten the drain bolt.
9. Loosen the radiator drain plug and drain the coolant.
10. Drain the differential oil. Reinstall the drain plug using a new washer.
11. Raise the hoist to full height, then attach a chain hoist to the engine.
12. Remove the transmission mount and mount bracket.

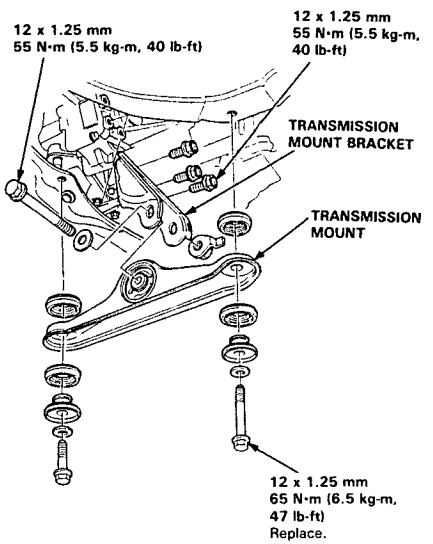

13. Remove the secondary cover and 33 mm sealing bolt.

    NOTE: Shift the manual transmission to 1st gear or automatic transmission to [P] position to lock the secondary shaft.

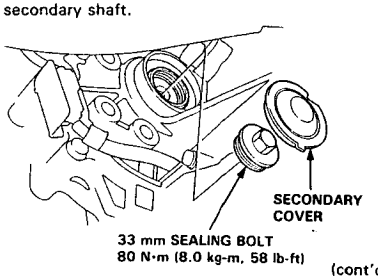

(cont'd)

Oil Pan

Removal (cont'd)

14. Disconnect the extension shaft from the differential with the special tool.

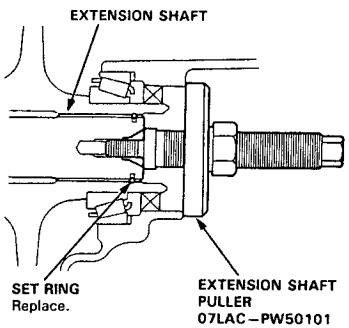

15. Remove the splash shield.

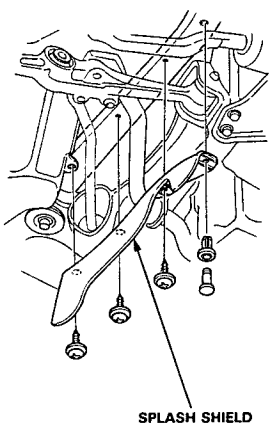

16. Remove the bracket A, the engine mount damper and the left front engine mount bracket.

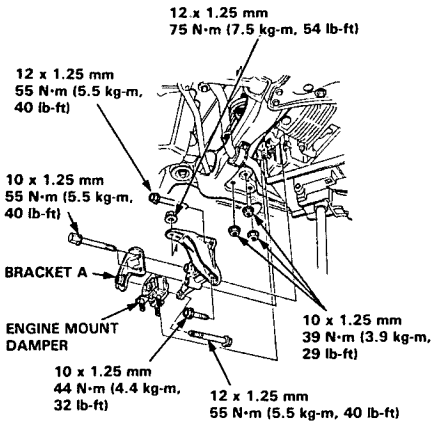

17. Remove the vehicle speed sensor (VSS)/power steering speed sensor.
    - Do not disconnect the fluid hoses.

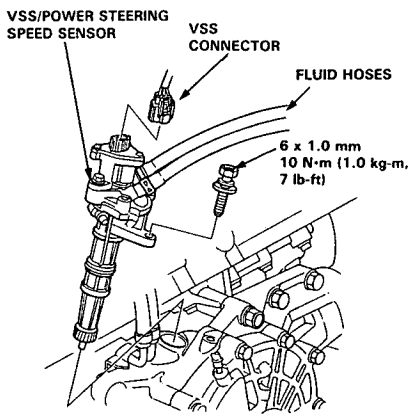

18. Disconnect the oil cooler hoses and the breather hose, then remove the differential mounting bolts and 26 mm shim.

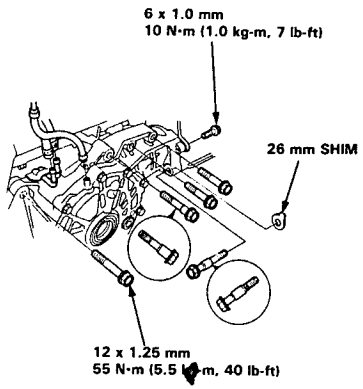

19. Remove the differential mounting bolts, then remove the differential assembly.

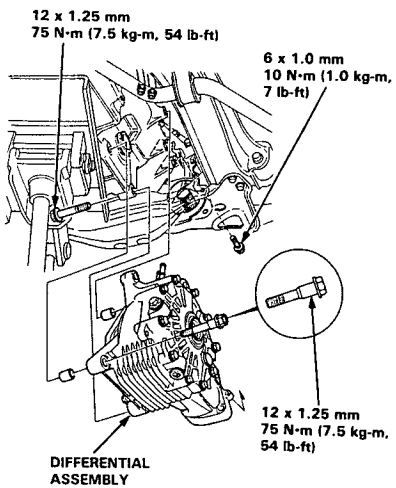

20. Remove the intermediate shaft.

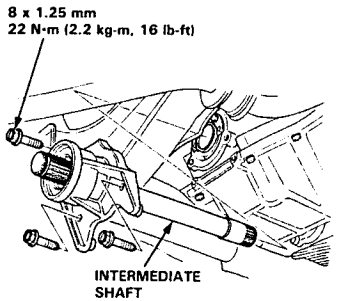

21. Remove the air conditioning (A/C) bracket.

    NOTE: When installing the A/C bracket, tighten the bolts on the oil pan first, then those on the engine block (page 5-11).

23. Remove the set plate, then remove the oil pan inner pipe.

24. Remove the oil pan.

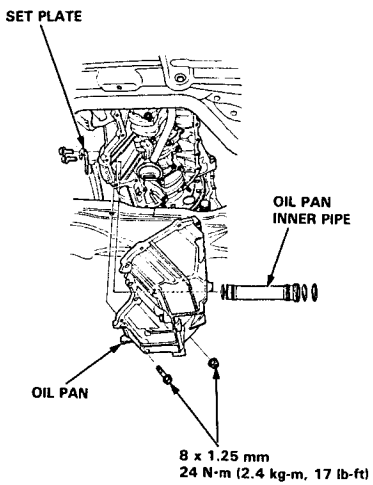

Oil Pan

Installation

Install the oil pan in the reverse order of removal:
- Always use new O-rings.
- Oil pan and engine block mating surface must be clean.

1. Apply liquid gasket to the engine block, then install the oil pan.

   NOTE:
   - Use liquid gasket, Part No. 08718–0001.
   - Check that the mating surfaces are clean and dry before applying liquid gasket.
   - Apply liquid gasket as an even bead, centered between edges of the mating surface.
   - To prevent leakage of oil, apply liquid gasket to the inner threads of the bolt holes.
   - Do not install the parts if 20 minutes or more have elapsed since applying liquid gasket. Instead, reapply liquid gasket after removing old residue.
   - After assembly, wait at least 30 minutes before filling the engine with oil.

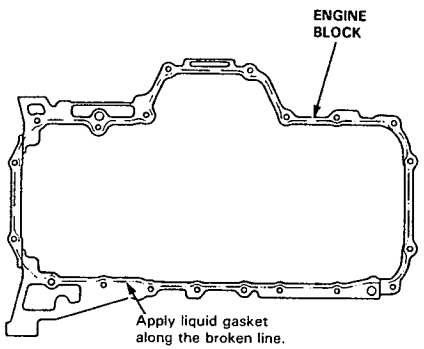

Specified Torque: 24 N·m (2.4 kg-m, 17 lb-ft)

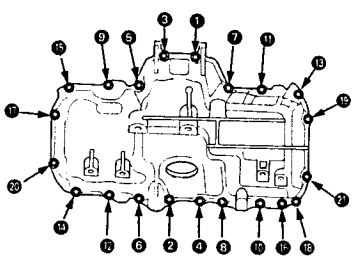

2. Install the oil pan inner pipe, then install the retainer.

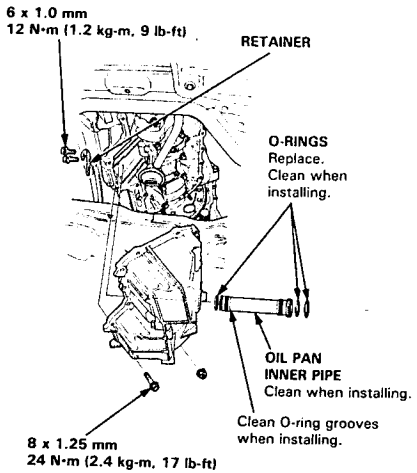

3. Apply Super High Temp Urea Grease (P/N 08798–9002) to the extension shaft splines.

4. Fill the opening of the drive pinion and extension shaft with Super High Temp Urea Grease (P/N 08798–9002), as shown.

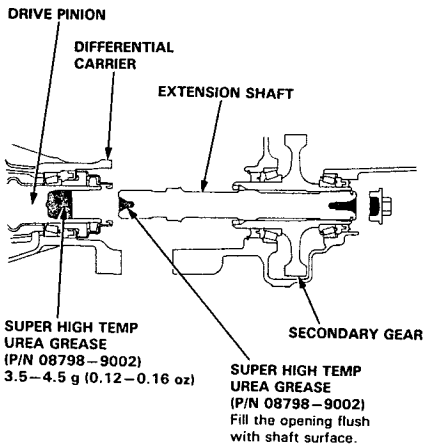

5. Install the differential assembly.
   - Select the appropriate 26 mm shim whenever the oil pan or the cylinder block is replaced. Refer to section 15 for selection of the correct 26 mm shim.

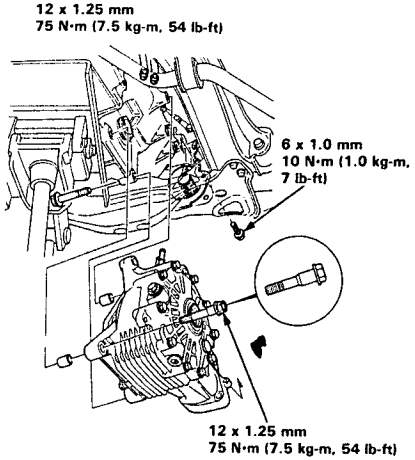

6. Apply grease to the spline of the extension shaft, then install the new set ring.

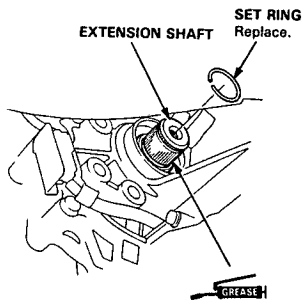

7. Fill the opening of the extension shaft and 33 mm sealing bolt with Super High Temp Urea Grease (P/N 08798–9002), as shown.

8. Apply liquid gasket (P/N 08718–0001) to the 33 mm sealing bolt threads.

9. Install the extension shaft.

10. Shift the manual transmission to 1st gear or automatic transmission to [P] position.

11. Install the 33 mm sealing bolt and secondary cover on the transmission housing.

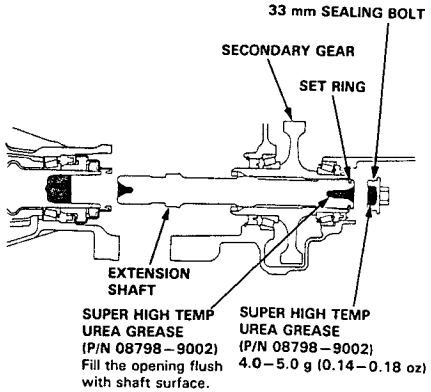

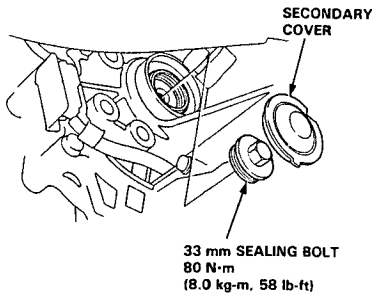

12. Check the following items after reassembly.
    - Refill the differential with hypoid gear oil.
    - Refill the engine with oil.
    - Refill the cooling system with coolant.
    - Make sure the set rings on the driveshafts are completely inserted into the groove of the differential or intermediate shaft.

Oil Pump

Illustrated Index

NOTE:
- Use new O-rings when reassembling.
- Apply oil to O-rings before installation.

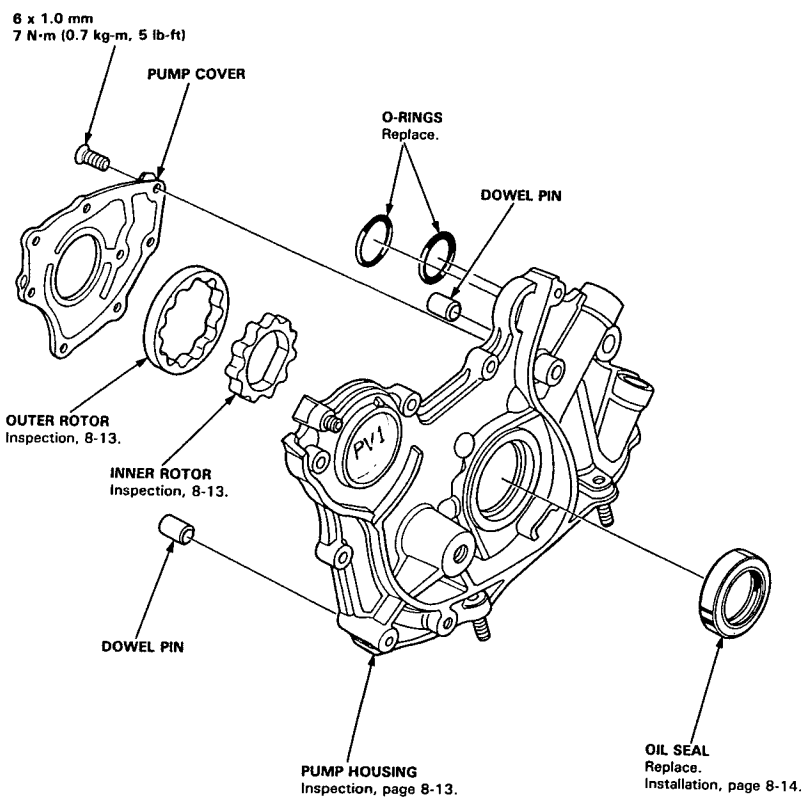

Removal/Inspection/Installation

1. Drain the engine oil and the differential oil.
2. Turn the crankshaft to TDC.
3. Remove the timing belt (page 6-29).
4. Remove the oil pan (page 8-7).
5. Remove the oil screen, then remove the oil pump.

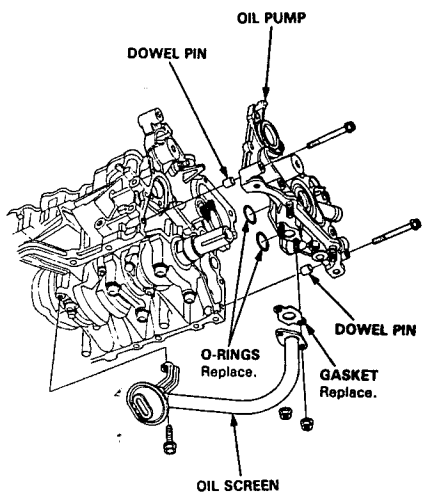

6. Remove the seven screws from the pump housing, then separate the housing and cover.
7. Check the inner-to-outer rotor clearance on the pump rotor.

Inner-to-Outer Rotor Clearance
Standard (New): 0.04–0.16 mm (0.002–0.006 in)
Service Limit: 0.20 mm (0.008 in)

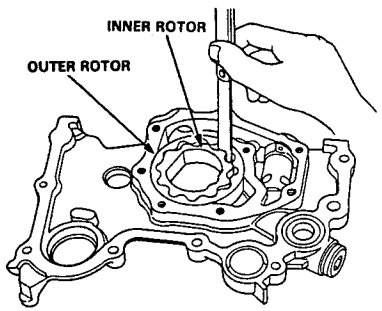

8. Check the housing-to-rotor axial clearance on the pump rotor.

Housing-to-Rotor Axial Clearance
Standard (New): 0.02–0.07 mm (0.001–0.003 in)
Service Limit: 0.12 mm (0.005 in)

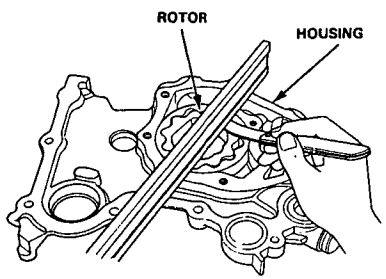

(cont'd)

Oil Pump

Removal/Inspection/Installation (cont'd)

9. Check the housing-to-outer rotor clearance.

Housing-to-Outer Rotor Clearance
Standard (New): 0.10–0.18 mm (0.004–0.007 in)
Service Limit: 0.20 mm (0.008 in)

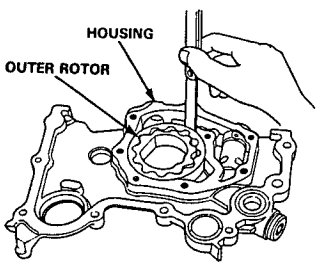

10. Inspect both rotors and pump housing for scoring or other damage. Replace parts if necessary.

11. Remove the old oil seal from the oil pump.

12. Gently tap in the new crankshaft oil seal until the special tool bottoms on the pump.

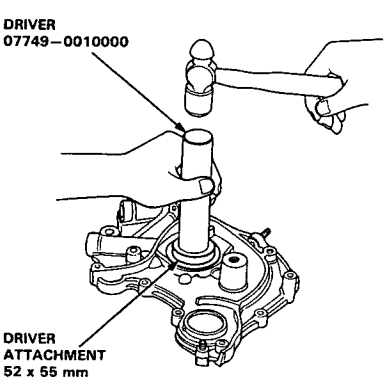

13. Reassemble the oil pump, applying liquid gasket to the pump housing screws.

14. Check that the oil pump turns freely.

15. Apply a light coat of oil to the seal lip.

16. Install the two dowel pins and new O-ring on the cylinder block.

17. Apply liquid gasket to the cylinder block mating surface of the oil pump.

NOTE:
- Use liquid gasket, Part No. 08718–0001.
- Check that the mating surfaces are clean and dry before applying liquid gasket.
- Apply liquid gasket as an even bead, centered between edges of the mating surface.
- Do not apply liquid gasket to the O-ring grooves.
- To prevent leakage of oil, apply liquid gasket to the inner threads of the bolt holes.

OIL PUMP HOUSING

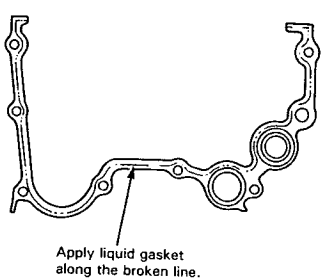

- Do not install the parts if 20 minutes or more have elapsed since applying liquid gasket. Instead, reapply liquid gasket after removing old residue.
- After assembly, wait at least 30 minutes before filling the engine with oil.

18. Install the oil pump to the cylinder block.

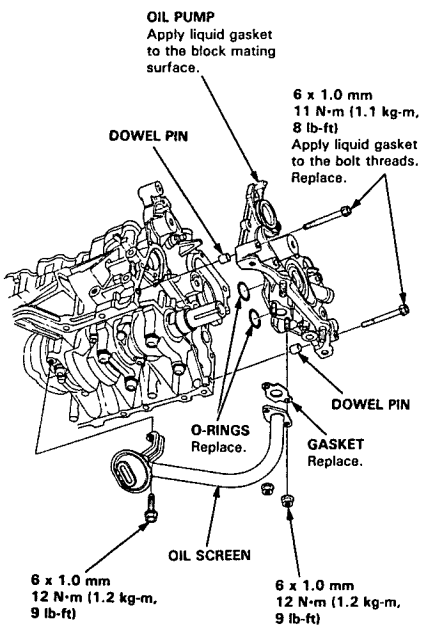

19. Install the oil screen.

20. Install the oil pan (page 8-10).

21. Install the timing belt (page 6-31).

Intake Manifold/Exhaust System

Intake Manifold
Replacement 9-2
Exhaust Manifold
Replacement 9-3
Exhaust Pipe and Muffler
Replacement 9-4

Intake Manifold

Replacement

NOTE: Use new gaskets and O-rings when reassembling.

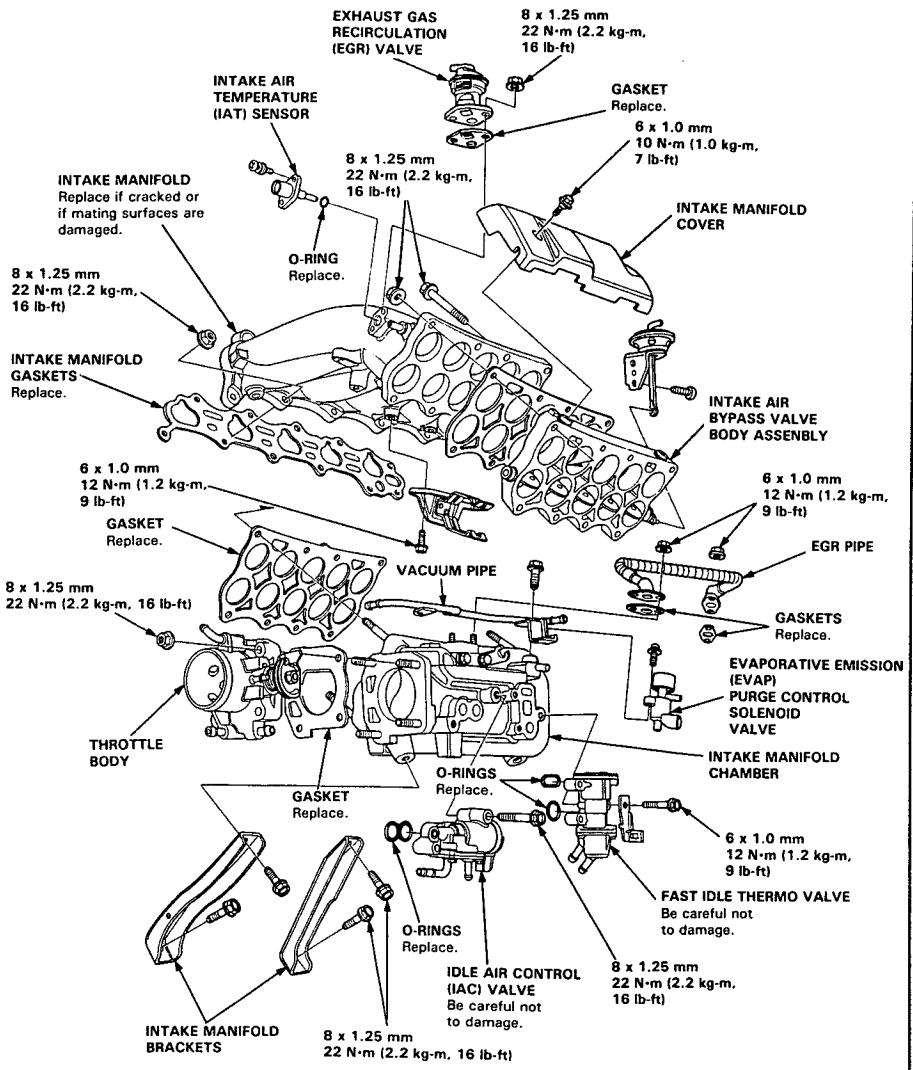

Exhaust Manifold

Replacement

NOTE: Use new gaskets and new self-locking nuts when assembling.

CAUTION: In handling a metal gasket, take care not to bend it or damage the contact surface of the gasket.

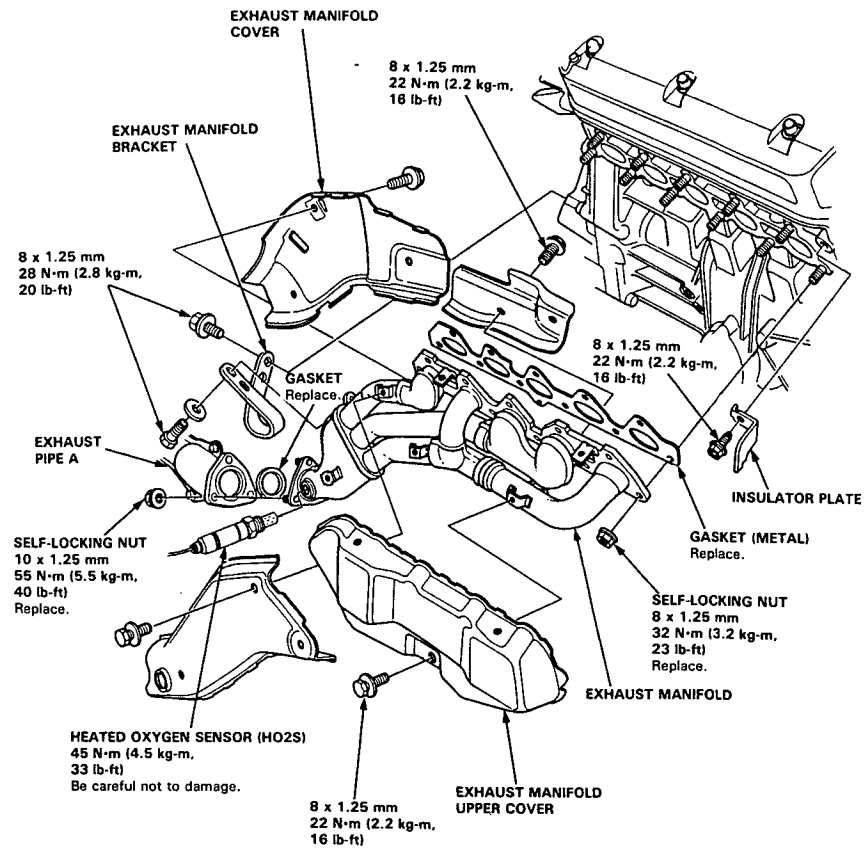

Exhaust Pipe and Muffler

Replacement

NOTE: Use new gaskets and self-locking nuts when reassembling.

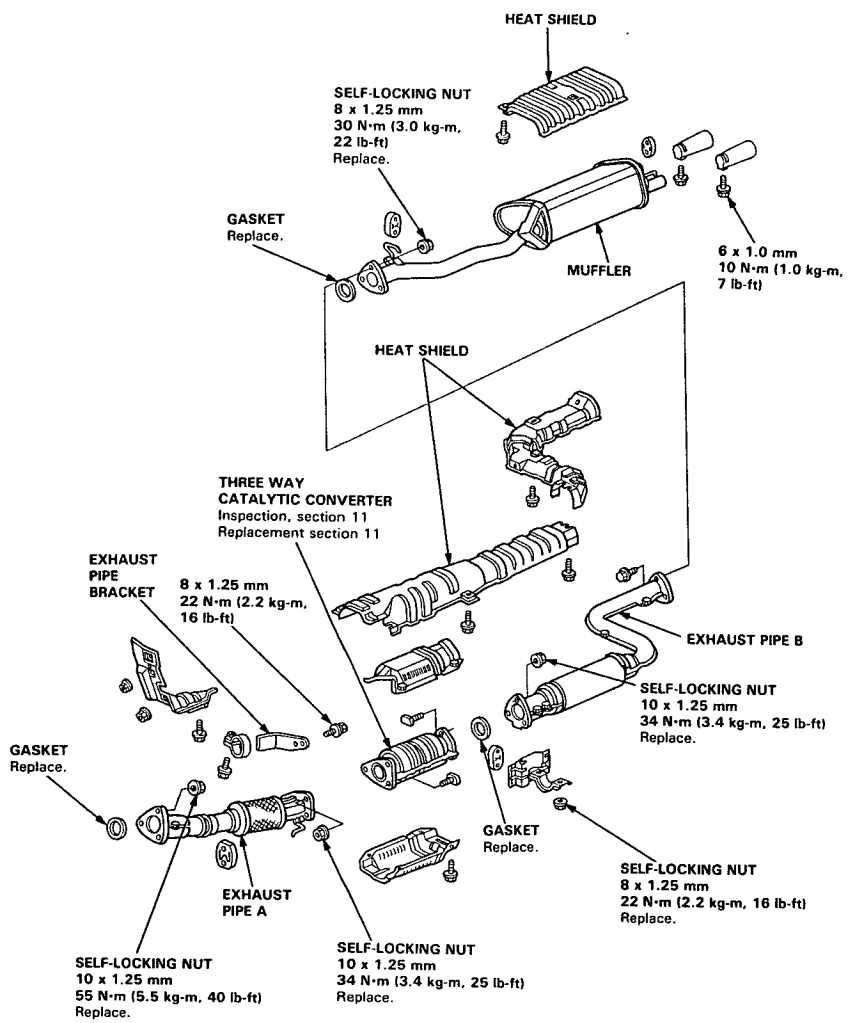

Cooling

Illustrated Index 10-2
Radiator
- Replacement 10-4
- Engine Coolant Refilling and Bleeding 10-5
- Cap Testing 10-6
- Pressure Testing 10-6

Thermostat
- Replacement 10-7
- Testing 10-7

Water Pump
- Illustrated Index 10-8
- Inspection 10-9
- Replacement 10-9

Cooling

Illustrated Index 10-2

Radiator

- Replacement 10-4
- Engine Coolant Refilling and Bleeding 10-5
- Cap Testing 10-6
- Pressure Testing 10-6

Thermostat

- Replacement 10-7
- Testing 10-7

Water Pump

- Illustrated Index 10-8
- Inspection 10-9
- Replacement 10-9

Illustrated Index

⚠WARNING System is under high pressure when engine is hot. To avoid danger of releasing scalding engine coolant, remove cap only when engine is cold.

Total Cooling System Capacity (Including heater and reservoir):
Manual Transmission:
7.6 ℓ (8.0 US qt, 6.7 Imp qt)
Automatic Transmission:
7.5 ℓ (7.9 US qt, 6.6 Imp qt)
Reservoir: 0.70 ℓ (0.74 US qt, 0.62 Imp qt)

NOTE:
- Check all cooling system hoses for damage, leaks or deterioration and replace if necessary.
- Check all hose clamps and retighten if necessary.
- Use new O-rings when reassembling.

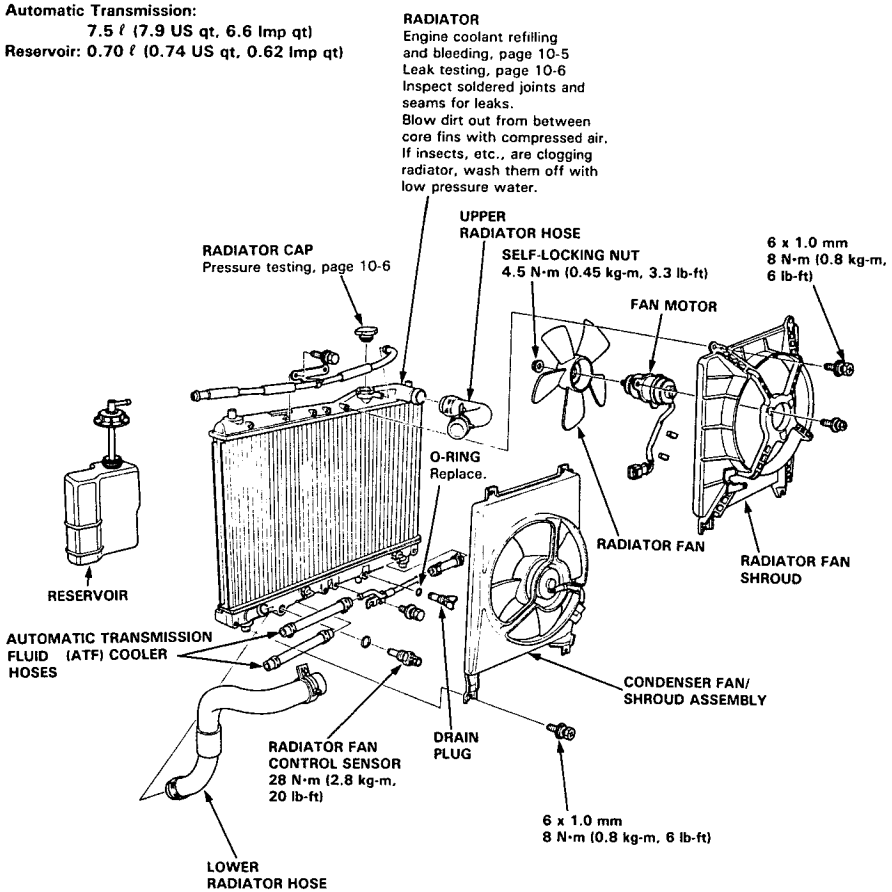

ENGINE CONNECTIONS:

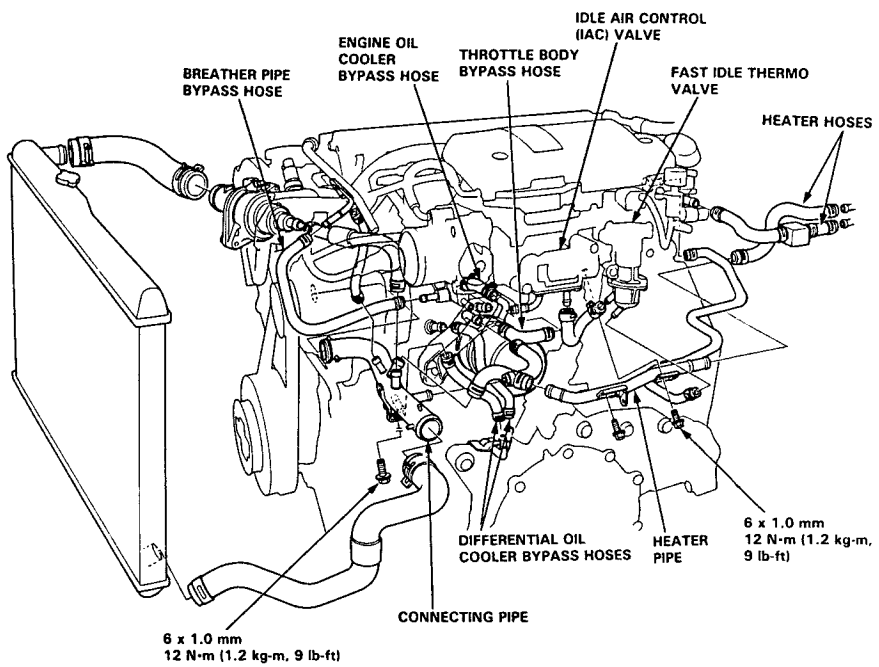

Radiator

Replacement

1. Drain the engine coolant.
2. Remove the upper and lower radiator hoses, and ATF cooler hoses.
3. Disconnect the fan motor connectors and the radiator fan control sensor connector.
4. Remove the radiator upper brackets, then pull up the radiator.
5. Remove the radiator and condenser fan shroud assemblies and other parts from radiator.

Install the radiator in the reverse order of removal:

NOTE:
- Set the upper and lower cushions securely.
- Fill the radiator and bleed the air.

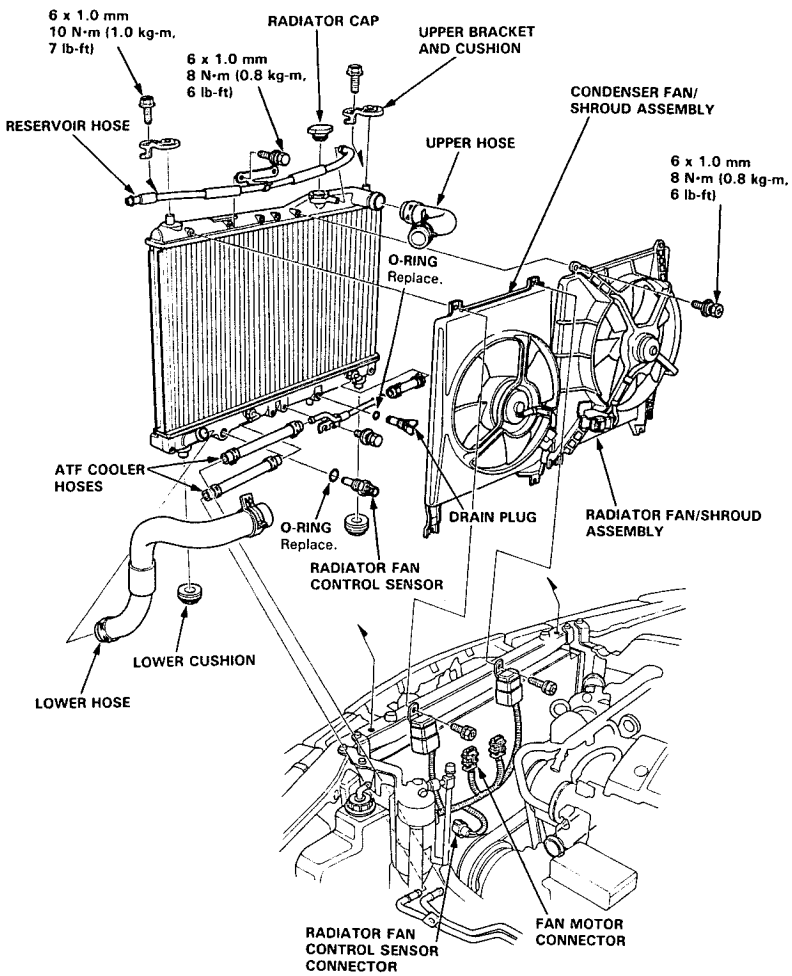

Engine Coolant Refilling and Bleeding

⚠WARNING Removing the radiator cap while the engine is hot can cause the engine coolant to spray out, seriously scalding you. Always let the engine and radiator cool down before removing the radiator cap.

CAUTION: When pouring coolant, be sure to shut the relay box lid and not to spill coolant on the electrical parts or the paint. If any coolant spills, rinse it off immediately.

1. Slide the heater temperature control lever to maximum heat. Make sure the engine and radiator are cool to the touch.
2. Remove the radiator cap.
3. Loosen the drain plug on the bottom of the radiator and remove the drain bolt on the engine block. Let the coolant drain out.

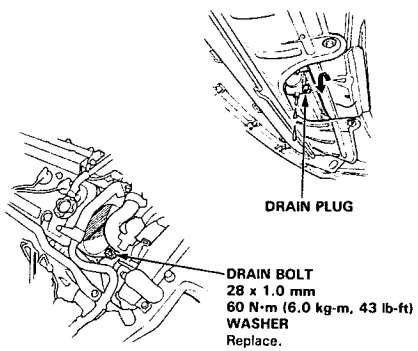

4. Remove the reservoir from its holder by pulling it straight up. Drain the coolant, then put the reservoir back in its holder.
5. When the coolant stops draining, apply liquid gasket to the drain bolt threads, then reinstall the bolt with a new washer. Tighten it securely.
6. Tighten the radiator drain plug securely.
7. Mix the recommended antifreeze/coolant with an equal amount of water in a clean container.

NOTE:
- Use only Genuine Honda Antifreeze/Coolant.
- For best corrosion protection, the engine coolant concentrations must be maintained year-round at 50% MINIMUM. Coolant concentrations less than 50% may not provide sufficient protection against corrosion or freezing.
- Coolant concentrations greater than 60% will impair cooling efficiency and are not recommended.

CAUTION:
- **Do not mix different brands of antifreeze/coolant.**
- **Do not use additional rust inhibitors or anti-rust products; they may not be compatible with the genuine engine coolant.**

Engine Coolant Refill Capacity: Including reservoir 0.70 ℓ (0.74 US qt, 0.62 Imp qt)
Manual Transmission:
6.0 ℓ (6.3 US qt, 5.3 Imp qt)
Automatic Transmission:
5.9 ℓ (6.2 US qt, 5.2 Imp qt)

8. Pour coolant into the radiator up to the base of the filler neck.
9. Loosen the two bleed bolts on top of the engine. Tighten them again when coolant comes out in a steady stream with no bubbles.

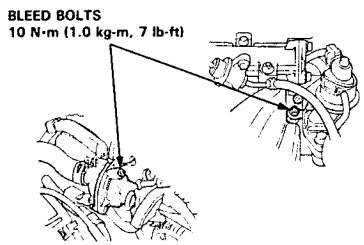

10. Refill the radiator to the base of the filler neck. Put the cap on the radiator, and tighten it only to the first stop. Start the engine and let it run until it warms up (the radiator cooling fan comes on at least twice).
11. Turn off the engine. Check the level in the radiator, add coolant if needed. Install the radiator cap, and tighten it fully.
12. Fill the reservoir to the MAX mark. Install the reservoir cap.

Radiator

Cap Testing

1. Remove the radiator cap, wet its seal with coolant, then install it on the pressure tester.
2. Apply a pressure of 95–125 kPa (0.95–1.25 kg/cm², 14–18 psi).
3. Check for a drop in pressure.

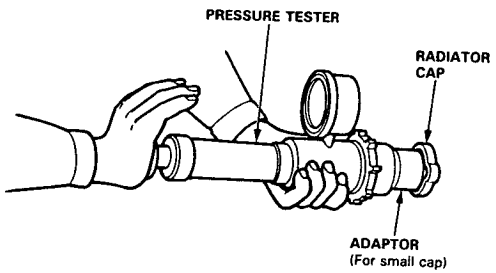

Pressure Testing

1. Wait until the engine is cool, then carefully remove the radiator cap and fill the radiator with coolant to the top of the filler neck.
2. Attach the pressure tester to the radiator and apply a pressure of 95–125 kPa (0.95–1.25 kg/cm², 14–18 psi).
3. Inspect for coolant leaks and a drop in pressure.
4. Remove the tester and reinstall the radiator cap.

   NOTE:
   - Check for engine oil in the coolant and/or coolant in the engine oil.
   - Check for ATF in the coolant and/or coolant in the ATF (A/T).

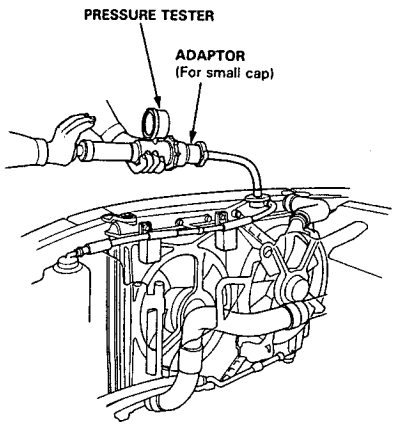

Thermostat

Replacement

NOTE: Use new gaskets and O-rings when reassembling.

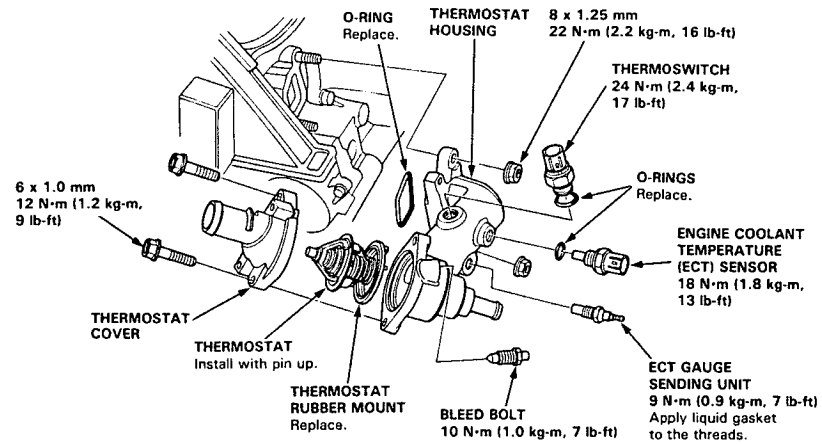

Testing

Replace thermostat if it is open at room temperature.

To test a closed thermostat:

1. Suspend the thermostat in a container of water as shown.
2. Heat the water and check the temperature with a thermometer. Check the temperature at which the thermostat first opens and at full lift.

   CAUTION: Do not let the thermometer touch the bottom of the hot container.
3. Measure the lift height of the thermostat when it's full open.

   STANDARD THERMOSTAT
   Starts opening:
   Primary valve: 180 ± 4°F (82 ± 2°C)
   Secondary valve: 185 ± 4°F (85 ± 2°C)
   Fully open: 203°F (95°C)
   Lift height:
   Primary valve: 10.0 mm (0.39 in) min.
   Secondary valve: 8.5 mm (0.33 in) min.

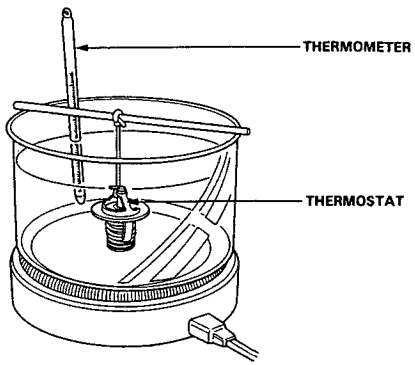

Water Pump

Illustrated Index

NOTE:
- Use new O-rings and new special bolts when reassembling.
- Use liquid gasket, Part No. 08718–0001.

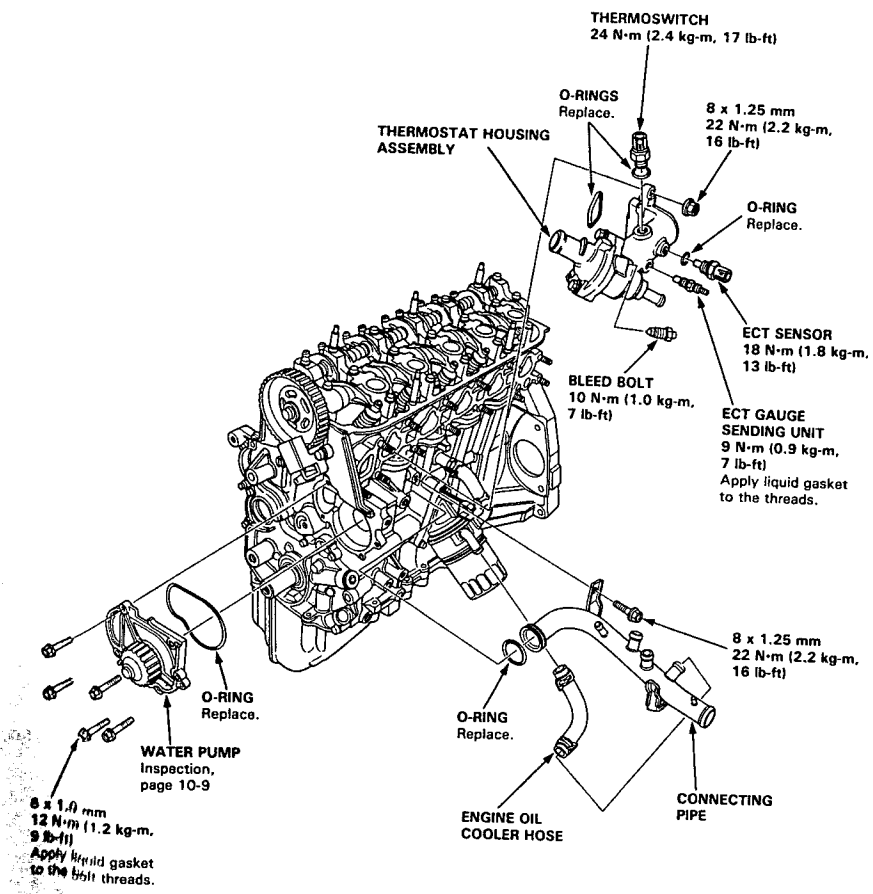

Inspection

1. Remove the timing belt (page 6-29).
2. Check that the water pump pulley turns freely.
3. Check for signs of seal leakage.

   NOTE: A small amount of weepage from the bleed hole is normal.

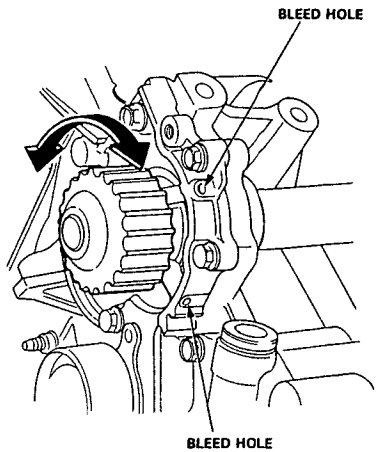

Replacement

NOTE:
- Use new O-rings and new special bolts when reassembling.
- Use liquid gasket, Part No. 08718–0001.

1. Drain the engine coolant (page 10-5).
2. Remove the timing belt (page 6-29).
3. Remove the bolts, then remove the water pump.
4. Install the water pump in the reverse order of removal.

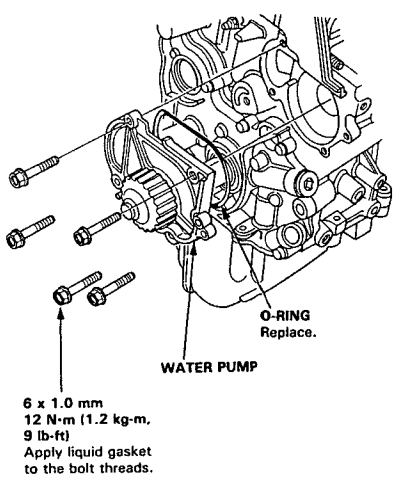

NOTE: (If Fuel and Emission maintenance is required):
The radio has a coded theft protection circuit.
If some service to the car requires any of the following, be sure you get the customer's code number before you begin work:
– disconnecting the battery.
– removing the No. 39 BACK UP (10 A) fuse in the under-hood fuse/relay box.
– removing the radio.
After service, reconnect power to the radio and turn it ON.
The word "CODE" will be displayed. Enter the customer's 5-digit code to restore radio operation.

Fuel and Emissions

Special Tools 11-2
Component Locations
Index 11-3
System Description
Vacuum Connections 11-5
Electrical Connections 11-8
System Connectors 11-16
Troubleshooting
Troubleshooting Guide 11-34
Self-diagnostic Procedures 11-36
How to Read Flowcharts 11-41

PGM-FI System
System Description 11-42
Troubleshooting Flowcharts
Engine Control Module 11-44
Heated Oxygen Sensor 11-48
Heated Oxygen Sensor Heater 11-50
Fuel Supply System 11-54
Fuel Metering System 11-56
Manifold Absolute Pressure Sensor 11-58
Top Dead Center/Crankshaft Position/ Cylinder Position Sensor 11-64
Engine Coolant Temperature Sensor 11-66
Throttle Position Sensor 11-68
Intake Air Temperature Sensor 11-70
Barometric Pressure Sensor 11-72
Ignition Output Signal 11-74
Vehicle Speed Sensor 11-76
Ignition Timing Adjuster 11-78
Electrical Load Detector 11-80
Knock Sensor 11-84
A/T FI Signal A/B 11-86

Idle Control System
System Troubleshooting Guide 11-88
System Description 11-89
Troubleshooting Flowcharts
Idle Air Control Valve 11-92
Air Conditioning Signal 11-94
Alternator FR Signal 11-96
Automatic Transaxle (A/T) Gear Position Signal 11-98
Starter Switch Signal 11-100
Brake Switch Signal 11-102
Power Steering Pressure Switch Signal ... 11-104
Fast Idle Thermo Valve 11-105
Idle Speed Setting 11-106

Fuel Supply System
System Troubleshooting Guide 11-107
System Description 11-108
Fuel Pressure 11-108
Fuel Injectors 11-110
Injector Resistor 11-115
Fuel Pressure Regulator 11-116
Fuel Filter 11-117
Fuel Pump 11-118
PGM-FI Main Relay 11-120
Fuel Tank 11-124

Intake Air System
System Troubleshooting Guide 11-125
System Description 11-126
Air Cleaner 11-127
Throttle Cable 11-128
Throttle Body 11-129
Intake Air Bypass Control System 11-132

Emission Control System
System Troubleshooting Guide 11-137
System Description 11-138
Tailpipe Emission 11-138
Three Way Catalytic Converter 11-139
Exhaust Gas Recirculation System 11-141
Positive Crankcase Ventilation System 11-147
Evaporative Emission Control 11-148

Special Tools

Ref. No.	Tool Number	Description	Q'ty	Page Reference
①	A973X–041–XXXXX	Vacuum Pump/Gauge	1	11-62, 129, 133, 142, 150, 153
②	KS–AHM–32–003	Digital Multimeter	1	11-39, 50, 55
③	07LAJ–PT3010A	Test Harness	1	11-39
④	07JAZ–001000B	Vacuum/Pressure Gauge 0–4 in. Hg	1	11-152, 153
⑤	07406–0040001	Fuel Pressure Gauge	1	11-109, 116

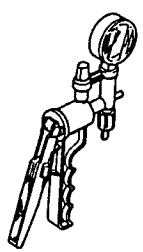

①

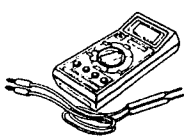

②

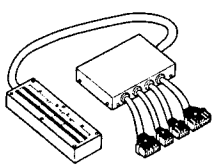

③

④

⑤

Component Locations

Index

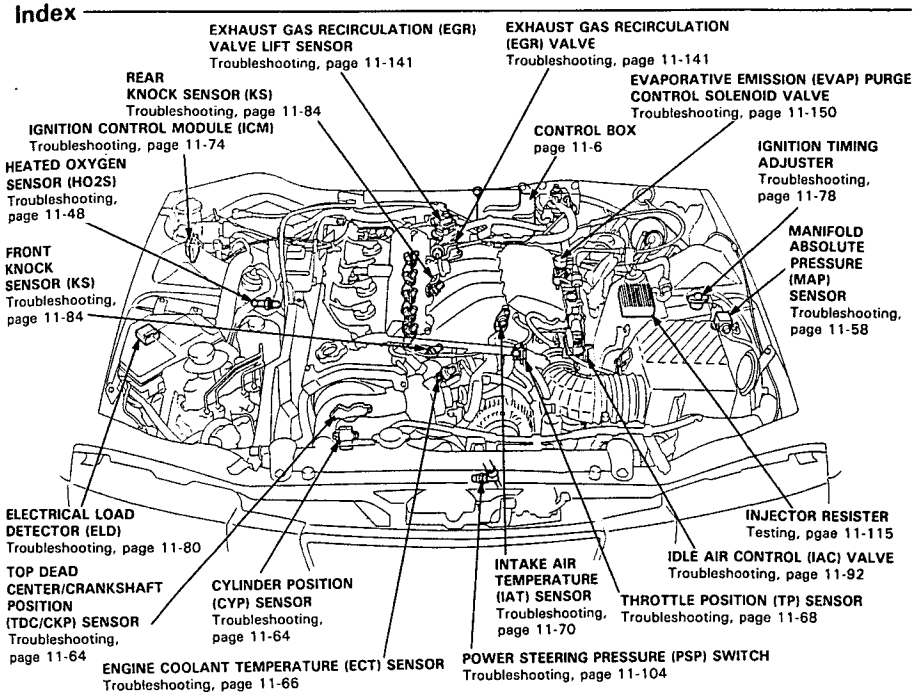

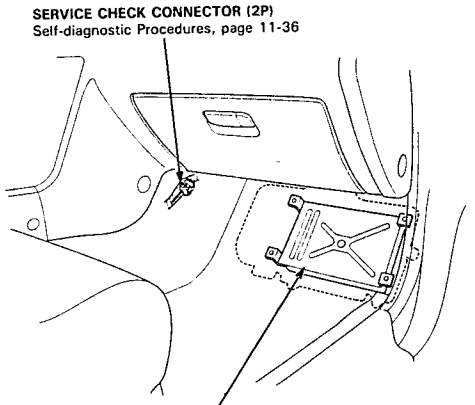

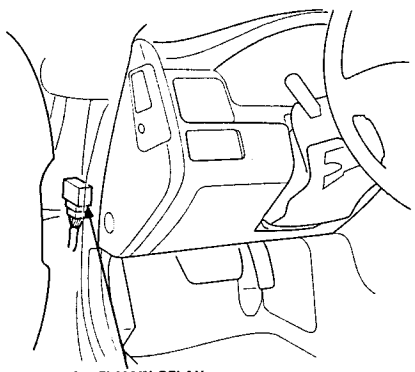

Component Locations

Index

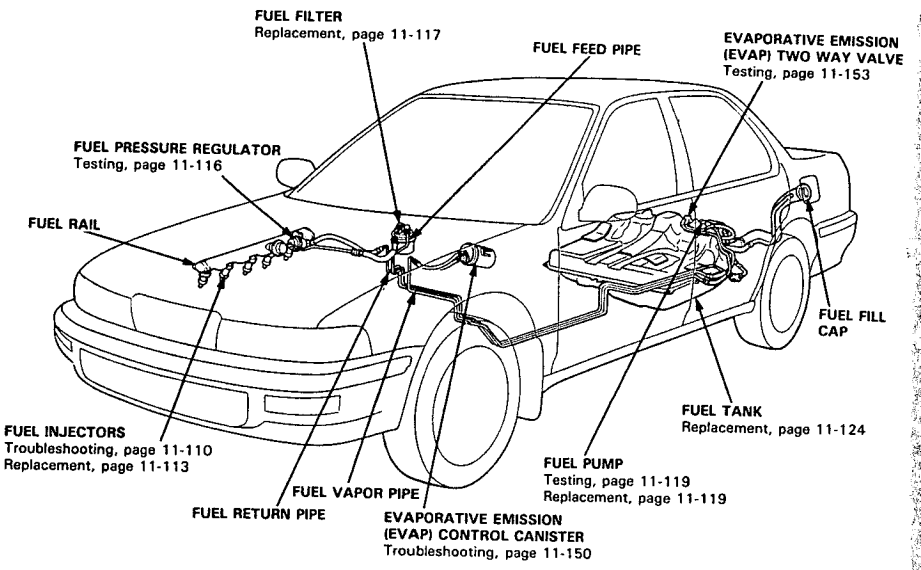

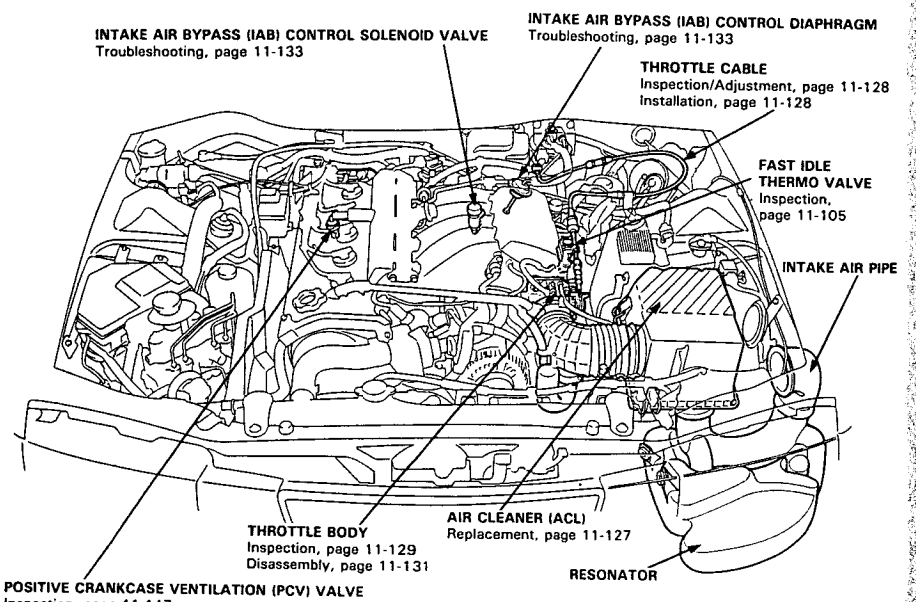

System Discription

Vacuum Connections

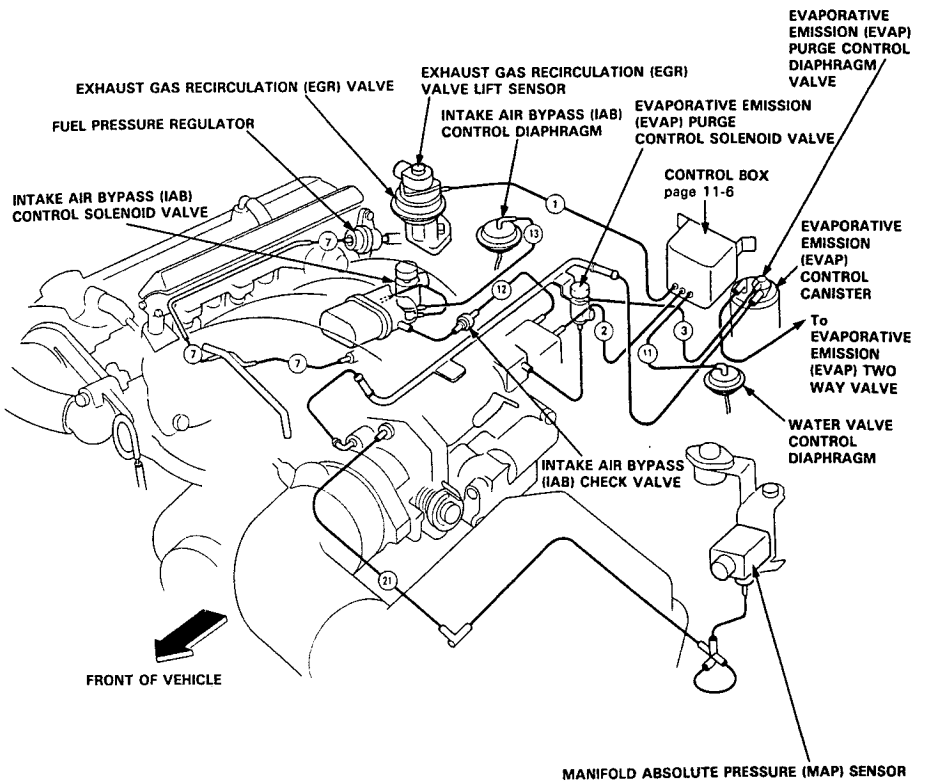

(cont'd)

System Description

Vacuum Connections (cont'd)

Control Box

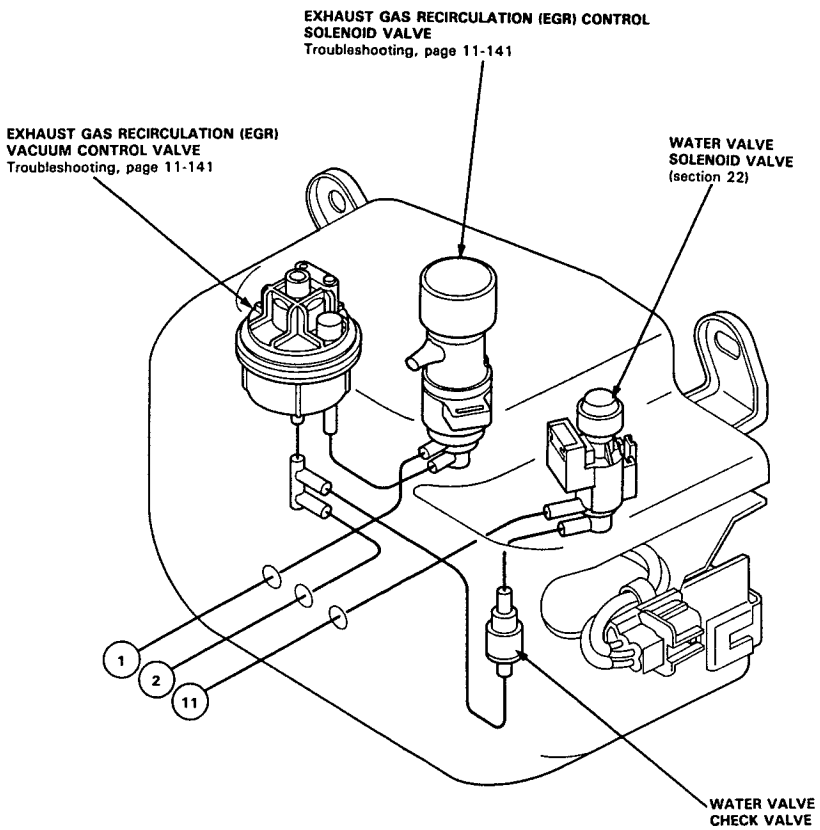

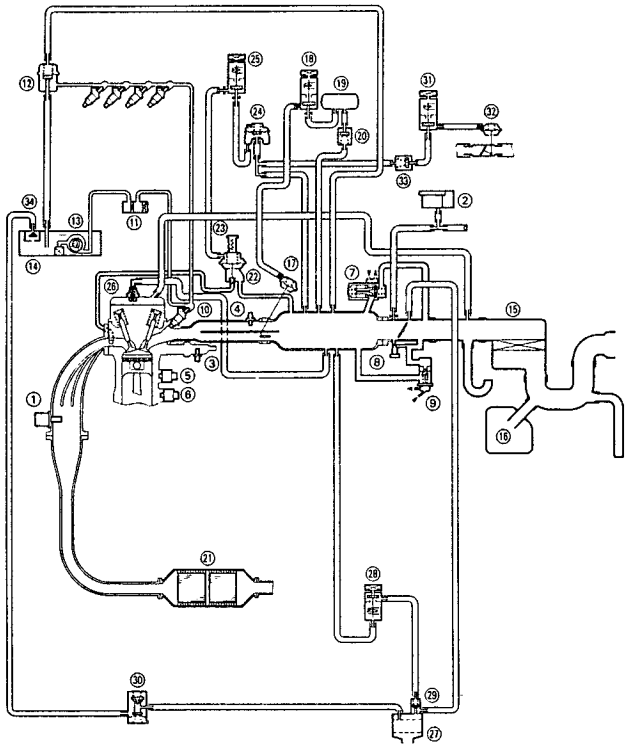

① HEATED OXYGEN SENSOR (HO2S)
② MANIFOLD ABSOLUTE PRESSURE (MAP) SENSOR
③ ENGINE COOLANT TEMPERATURE (ECT) SENSOR
④ INTAKE AIR TEMPERATURE (IAT) SENSOR
⑤ FRONT KNOCK SENSOR (KS)
⑥ REAR KNOCK SENSOR (KS)
⑦ IDLE AIR CONTROL (IAC) VALVE
⑧ IDLE ADJUSTING SCREW
⑨ FAST IDLE THERMO VALVE
⑩ FUEL INJECTOR
⑪ FUEL FILTER
⑫ FUEL PRESSURE REGULATOR
⑬ FUEL PUMP
⑭ FUEL TANK
⑮ AIR CLEANER (ACL)
⑯ RESONATOR
⑰ INTAKE AIR BYPASS (IAB) CONTROL DIAPHRAGM
⑱ INTAKE AIR BYPASS (IAB) CONTROL SOLENOID VALVE
⑲ INTAKE AIR BYPASS (IAB) VACUUM TANK
⑳ INTAKE AIR BYPASS (IAB) CHECK VALVE
㉑ THREE WAY CATALYTIC CONVERTER (TWC)
㉒ EXHAUST GAS RECIRCULATION (EGR) VALVE
㉓ EXHAUST GAS RECIRCULATION (EGR) VALVE LIFT SENSOR
㉔ EXHAUST GAS RECIRCULATION (EGR) VACUUM CONTROL VALVE
㉕ EXHAUST GAS RECIRCULATION (EGR) CONTROL SOLENOID VALVE
㉖ POSITIVE CRANKCASE VENTILATION (PCV) VALVE
㉗ EVAPORATIVE EMISSION (EVAP) CONTROL CANISTER
㉘ EVAPORATIVE EMISSION (EVAP) PURGE CONTROL SOLENOID VALVE
㉙ EVAPORATIVE EMISSION (EVAP) PURGE CONTROL DIAPHRAGM VALVE
㉚ EVAPORATIVE EMISSION (EVAP) TWO WAY VALVE
㉛ WATER VALVE SOLENOID VALVE
㉜ WATER VALVE CONTROL DIAPHRAGM
㉝ WATER VALVE CHECK VALVE
㉞ FUEL TANK EVAPORATIVE EMISSION (EVAP) VALVE

System Description

Electrical Connections

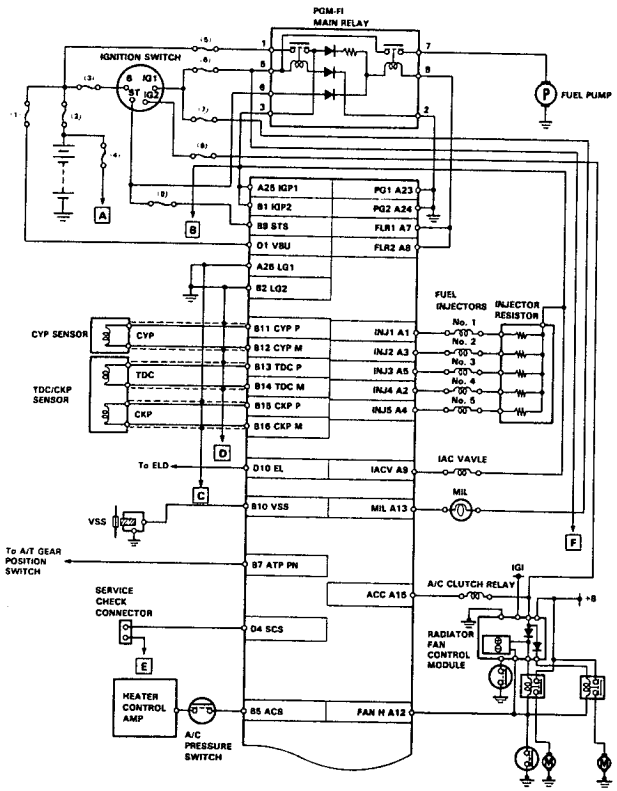

FUSES

① BACK UP (10 A)*
② BATTERY (100 A)*
③ IG (50 A)*
④ STOP HORN (20 A)*
⑤ ECU (ECM) (10 A)*
⑥ No. 2 ECU (ECM) (15 A)
⑦ No. 1 BACK UP LIGHTS (10 A)
⑧ No. 8 A/C CLUTCH RELAY (7.5 A)
⑨ No. 9 STARTER SIGNAL (7.5 A)
*: In the under-hood fuse/relay box

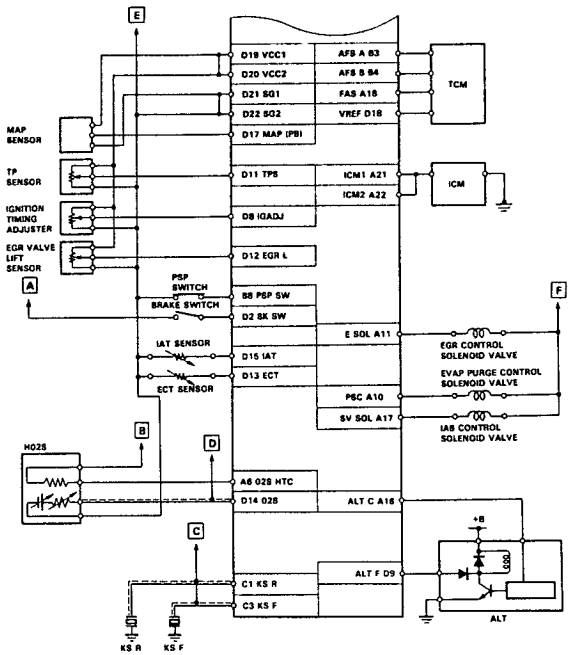

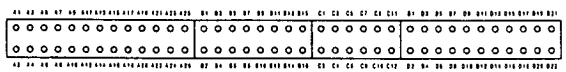

TERMINAL LOCATIONS

(cont'd)

System Description

Electrical Connections (cont'd)

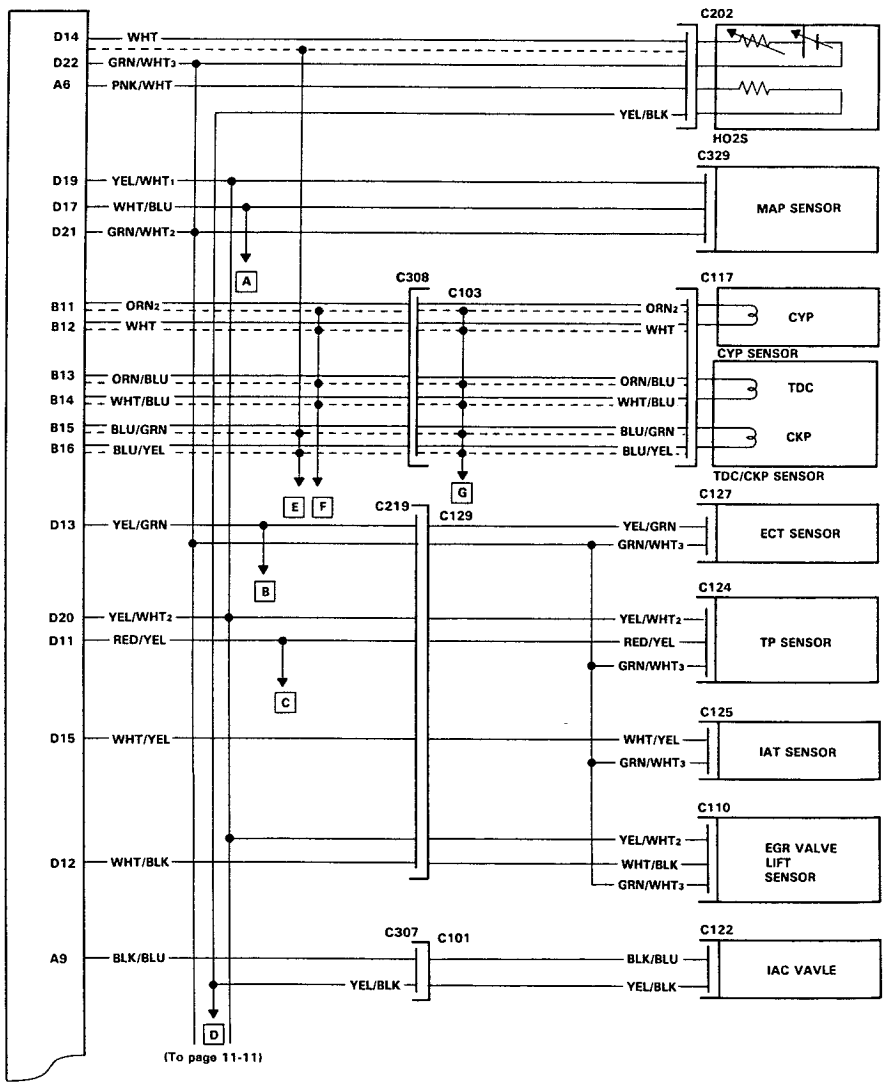

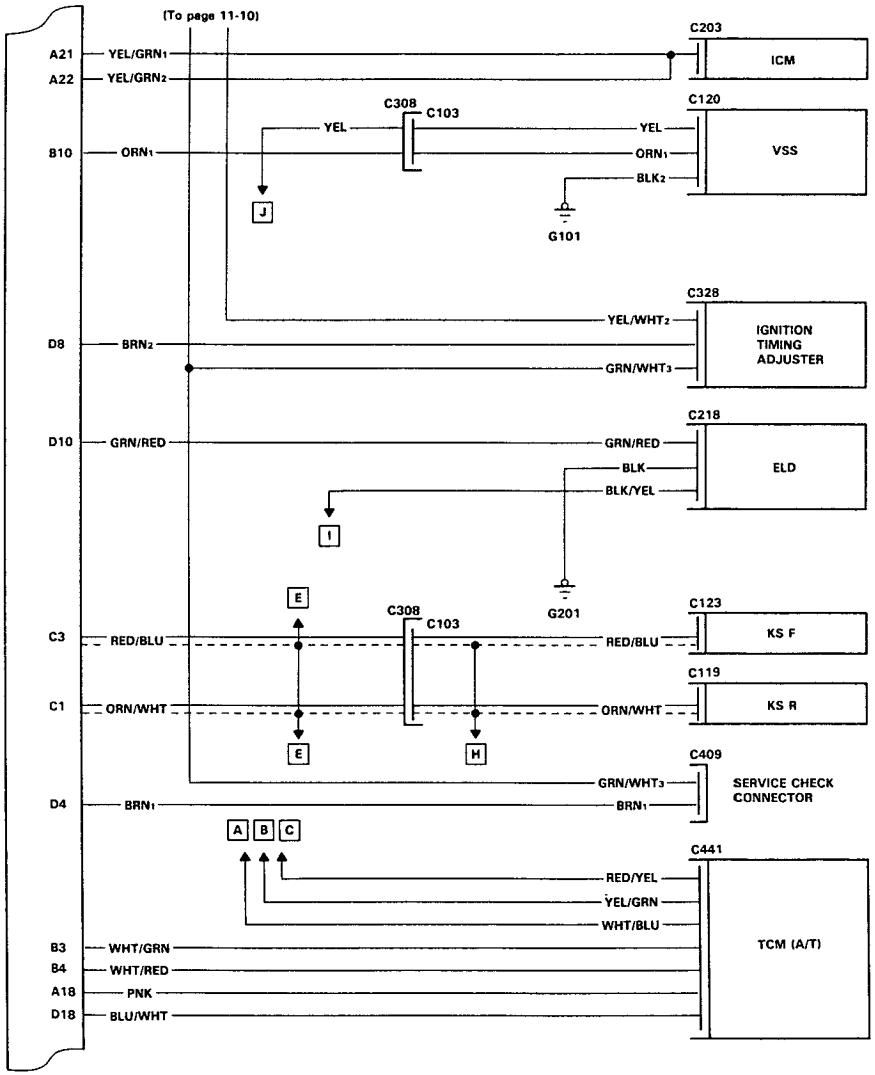

(cont'd)

System Description

Electrical Connections (cont'd)

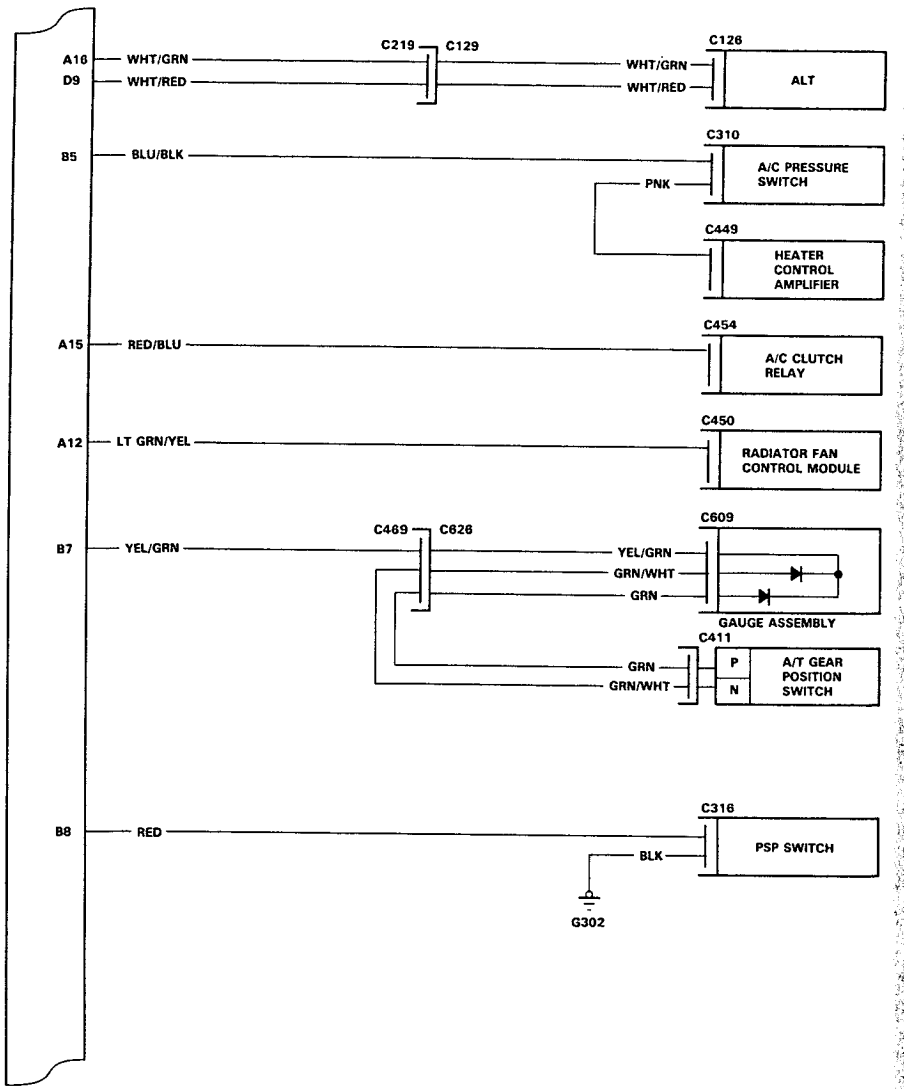

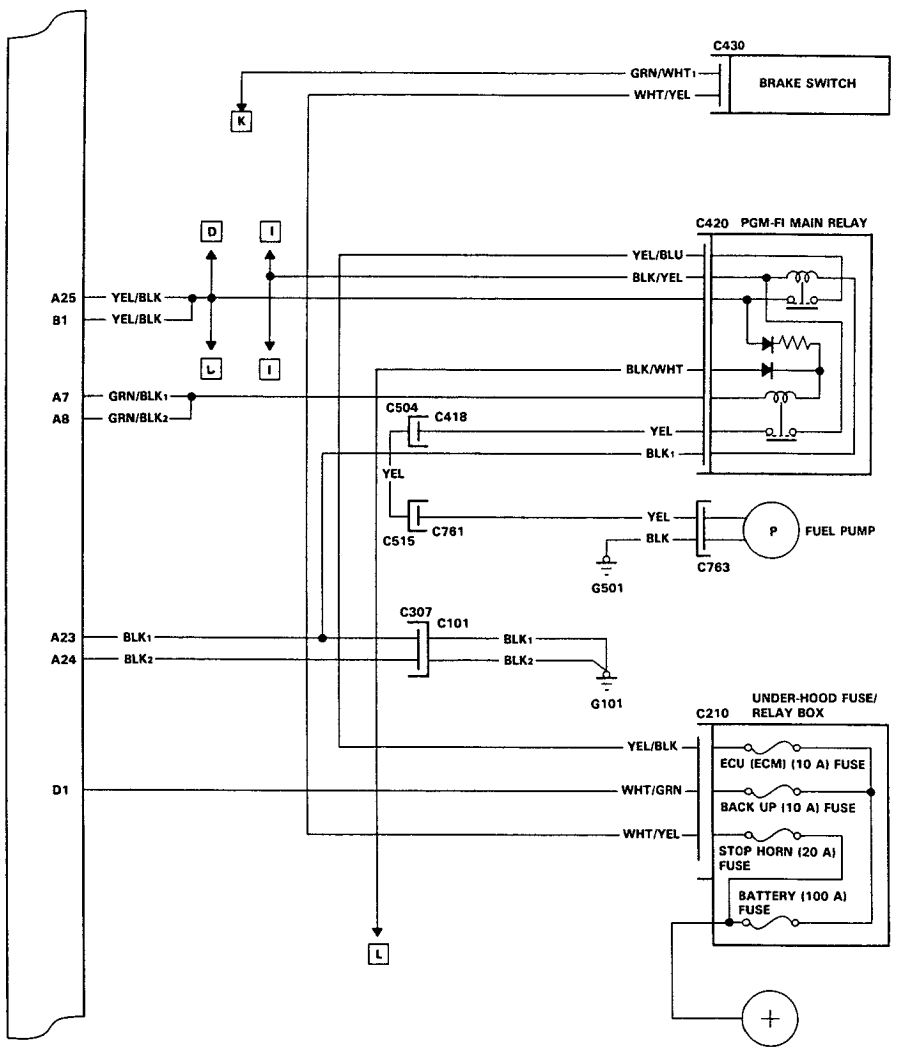

(cont'd)

System Description

Electrical Connections (cont'd)

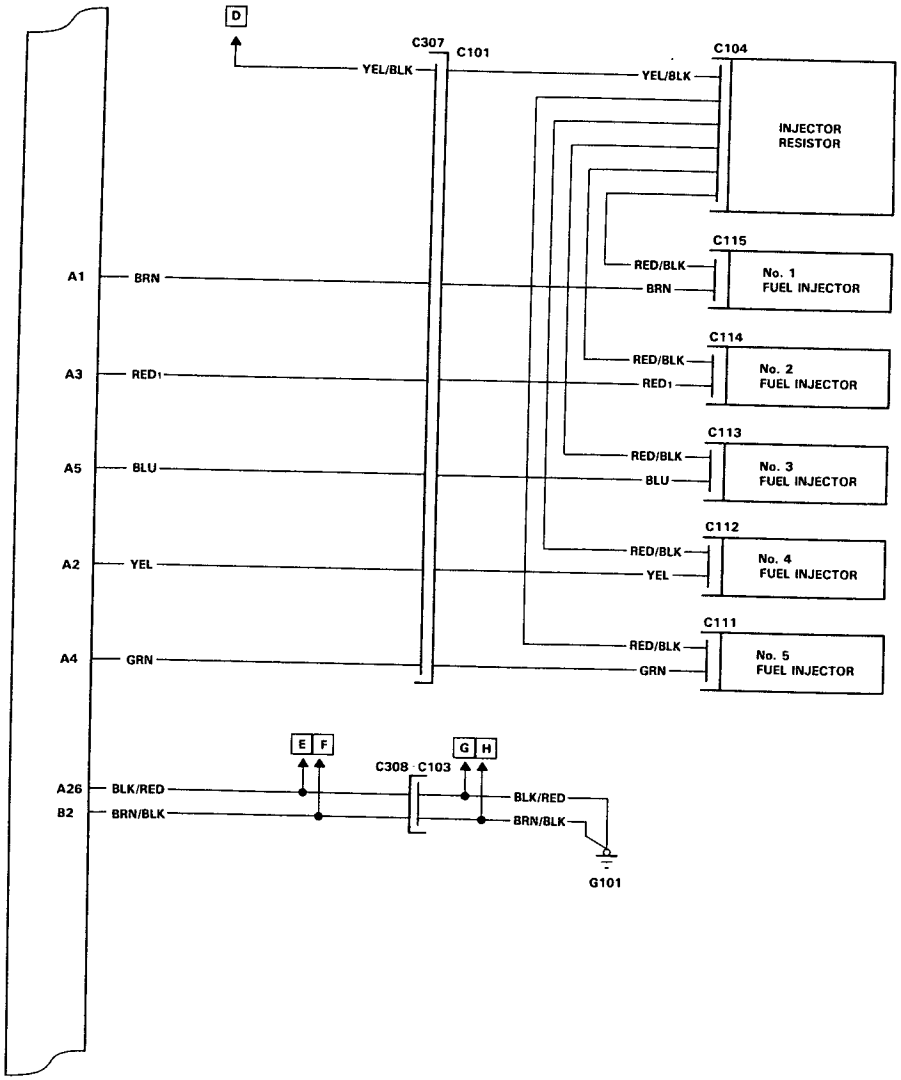

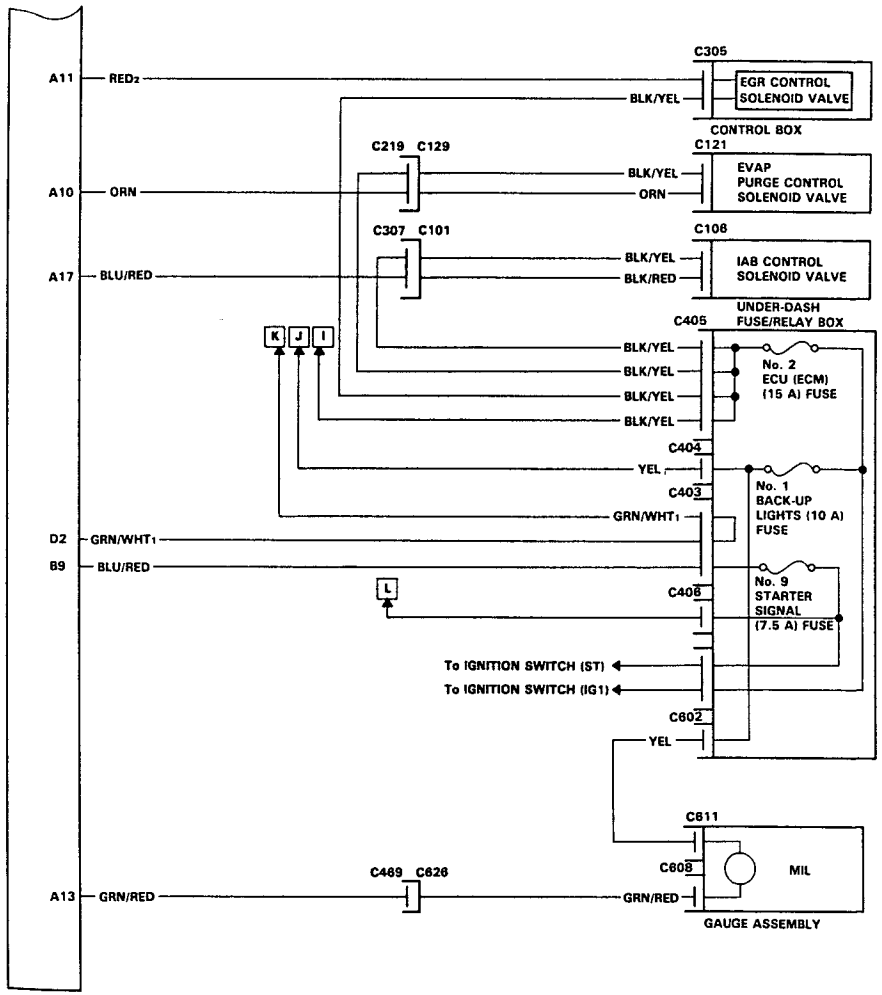

System Description

System Connectors [Engine Compartment]

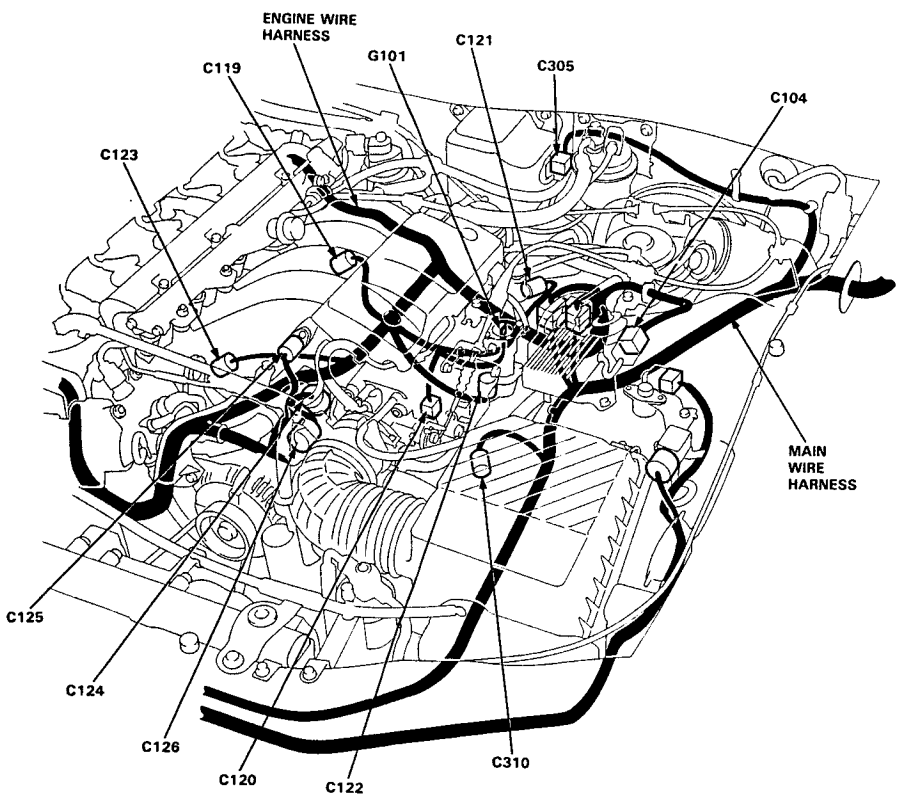

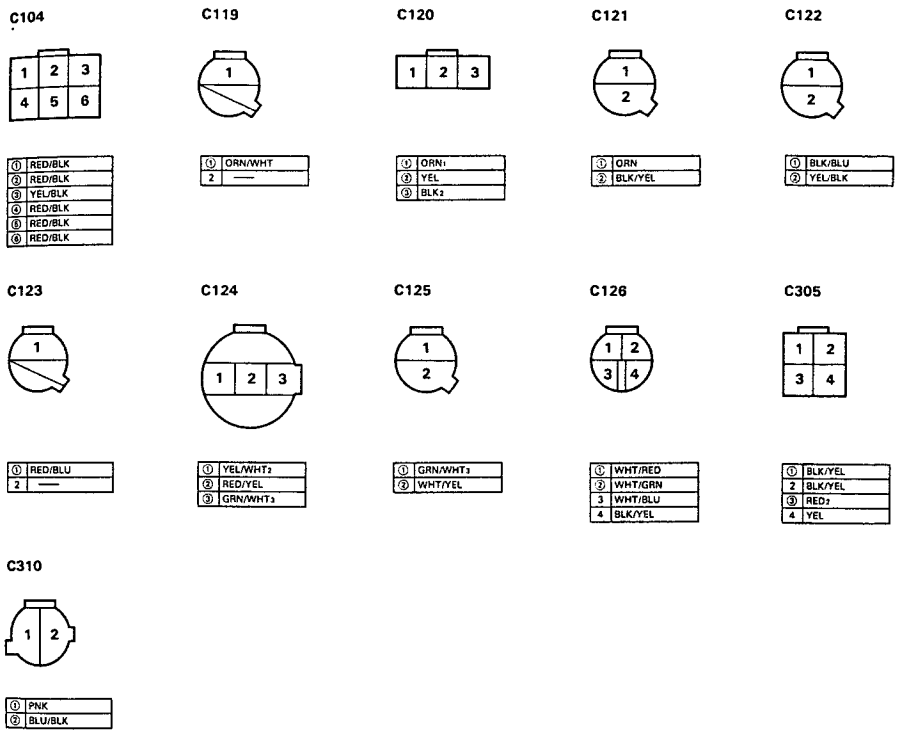

NOTE: Different wires with the same color have been given a number suffix to distinguish them (for example YEL/BLK1 and YEL/BLK2 are not the same).
O: Related to Fuel and Emissions System.

(cont'd)

System Description

System Connectors [Engine Compartment] (cont'd)

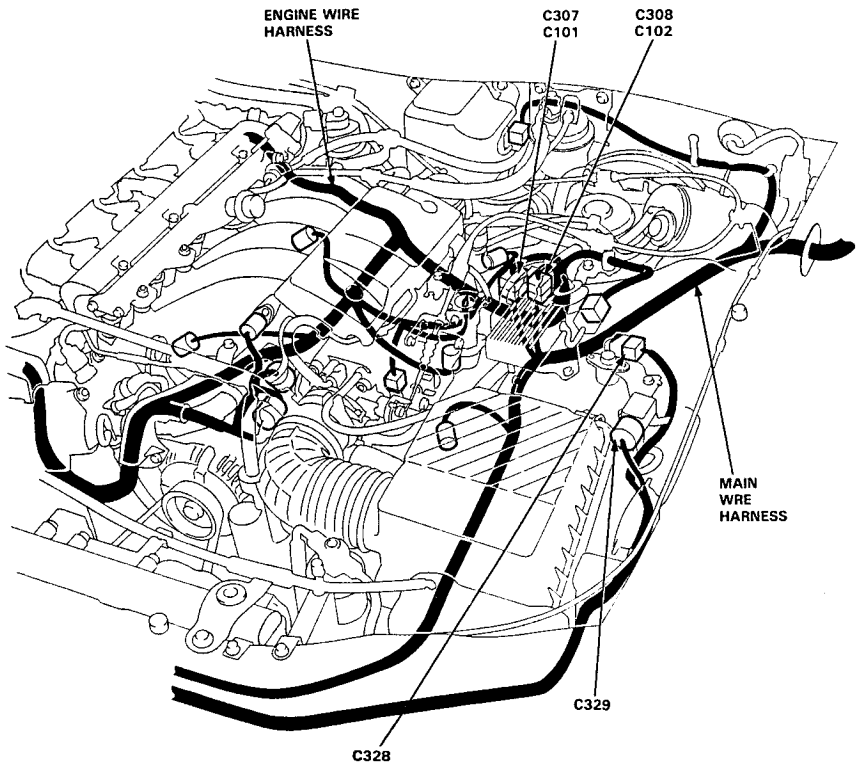

C307

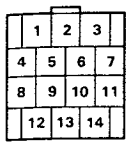

①	RED₁	⑨	BLK₁
②	BRN	10	YEL (M/T)
③	YEL/BLK	10	GRY (A/T)
④	YEL	11	GRN/BLK (M/T)
⑤	BLU	11	BRN (A/T)
⑥	BLK/YEL	⑫	BLK₂
⑦	BLU/RED	⑬	BLK/BLU
⑧	GRN	⑭	YEL/BLK

C308

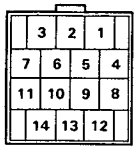

①	GRN/BLU	⑧	ORN₁
②	WHT/BLU	⑨	ORN/WHT
③	ORN₂	⑩	BLK/RED
④	YEL	⑪	BLU/YEL
⑤	BRN/BLK	⑫	RED/BLU
⑥	WHT	13	RED
⑦	BLU/GRN	14	YEL/RED

C328

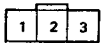

①	GRN/WHT₃
②	BRN₂
③	YEL/WHT₂

C329

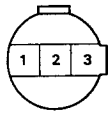

①	WHT/BLU
②	GRN/WHT₂
③	YEL/WHT₁

NOTE: Different wires with the same color have been given a number suffix to distinguish them (for example YEL/BLK₁ and YEL/BLK₂ are not the same).
O: Related to Fuel and Emissions System.

(cont'd)

System Description

System Connectors [Engine Compartment] (cont'd)

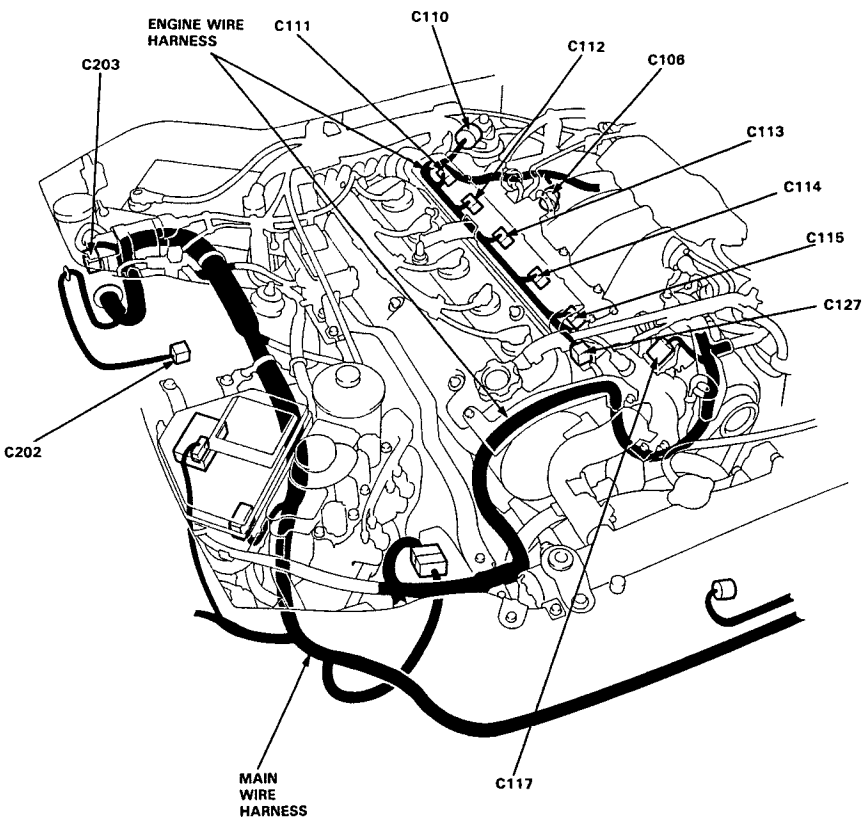

C106

①	BLU/RED
②	BLK/YEL

C110

①	YEL/WHT$_2$
②	GRN/WHT$_3$
③	WHT/BLK

C111

①	GRN
②	RED/BLK

C112

①	YEL
②	RED/BLK

C113

①	BLU
②	RED/BLK

C114

①	RED$_1$
②	RED/BLK

C115

①	BRN
②	RED/BLK

C117

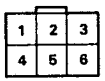

①	WHT
②	BLU/YEL
③	WHT/BLU
④	ORN$_2$
⑤	BLU/GRN
⑥	ORN/BLU

C127

①	GRN/WHT$_3$
②	YEL/GRN

C202

①	GRN/WHT$_3$
②	WHT
③	PNK/WHT
④	YEL/BLK

C203

1	BLU
②	YEL/GRN$_1$
3	BLK
4	BLK/YEL

NOTE: Different wires with the same color have been given a number suffix to distinguish them (for example YEL/BLK$_1$ and YEL/BLK$_2$ are not the same).
○: Related to Fuel and Emissions System.

(cont'd)

System Description

System Connectors [Engine Compartment] (cont'd)

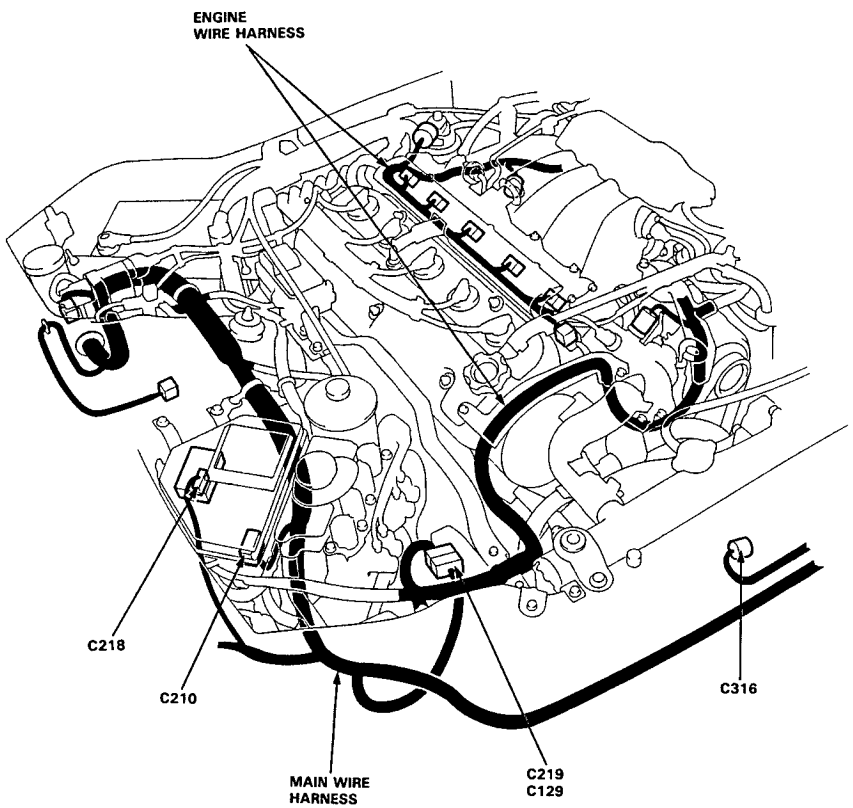

C210

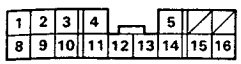

①	WHT/GRN	9	BLU/RED
2	WHT/BLU	10	WHT
3	WHT/GRN	11	RED
④	WHT/YEL	12	GRN/BLK
⑤	YEL/BLU	13	YEL/BLK
6	—	14	BLU/BLK
7	—	15	WHT/YEL
8	WHT	16	RED/GRN

C218

①	BLK
②	GRN/RED
③	BLK/YEL

C219

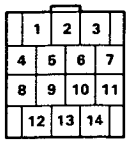

①	ORN	⑧	WHT/GRN
②	YEL/WHT₂	9	WHT/BLU
③	WHT/BLK	⑩	YEL/WHT₃
④	WHT/RED	⑪	YEL/GRN
⑤	BLK/YEL	12	BLK/YEL
6	GRN	⑬	GRN/WHT₃
⑦	WHT/YEL	⑭	RED/YEL

C316

①	RED
②	BLK

NOTE: Different wires with the same color have been given a number suffix to distinguish them (for example YEL/BLK₁ and YEL/BLK₂ are not the same).
O: Related to Fuel and Emissions System.

(cont'd)

System Description

System Connectors [Dash and Floor] (cont'd)

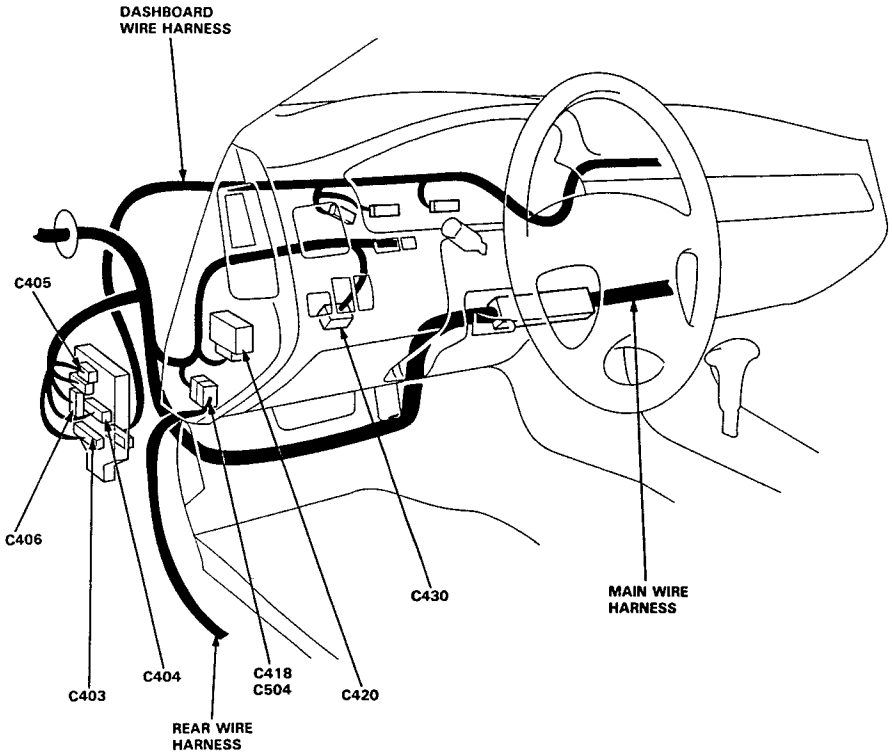

C403

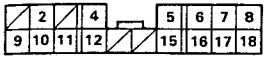

1	—	10	GRN/BLU
2	BLK/RED	11	RED/BLU
3	—	12	WHT/BLU
4	GRN/YEL	13	—
5	YEL/BLK	14	—
6	YEL/BLK	⑮	BLU/RED
7	GRN/WHT	16	YEL/BLK*
⑧	GRN/WHT1	⑰	GRN/WHT2
9	BLK/YEL	18	GRN/WHT

*: Canada

C404

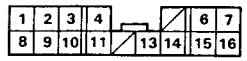

1	BLU	9	YEL
2	BLK	10	GRN/RED
3	GRN	11	YEL/RED
4	GRN/YEL	12	—
5	—	13	BLU
6	RED/BLK (A/T)	14	BLU
7	RED/BLK	15	BLU
⑧	YEL	16	BLU(A/T)

C405

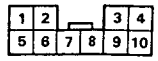

①	BLK/YEL	6	BLK
②	BLK/YEL	7	BLK
③	BLK/YEL	8	BLK
④	BLK/YEL	9	BLK
5	BLK	10	BLK/YEL

C406

1	BLK/YEL
②	BLK/WHT
3	GRN/BLK
4	WHT/BLU
5	—

C418

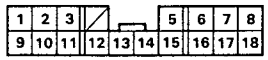

1	BLU/GRN*	10	GRN/WHT*
2	BLK/YEL*	11	GRN/BLU
3	RED/YEL*	12	GRN
4	—	13	GRN/YEL
5	YEL/RED	14	GRN/BLK
6	GRN/BLK	15	WHT/RED
7	GRN/YEL	⑯	YEL
8	BLU/YEL	17	LT BLU
9	GRN/ORN*	18	GRY

*: Excepe Canada LS (M/T)

C420

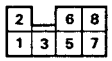

①	YEL/BLU	⑤	BLK/YEL
②	BLK1	⑥	BLK/WHT
③	YEL/BLK	⑦	YEL
4	—	⑧	GRN/BLK1

C430

①	WHT/YEL
2	GRN
3	LT GRN
④	GRN/WHT1

NOTE: Different wires with the same color have been given a number suffix to distinguish them (for example YEL/BLK1 and YEL/BLK2 are not the same).

○: Related to Fuel and Emissions System.

(cont'd)

System Description

System Connectors [Floor and Dash] (cont'd)

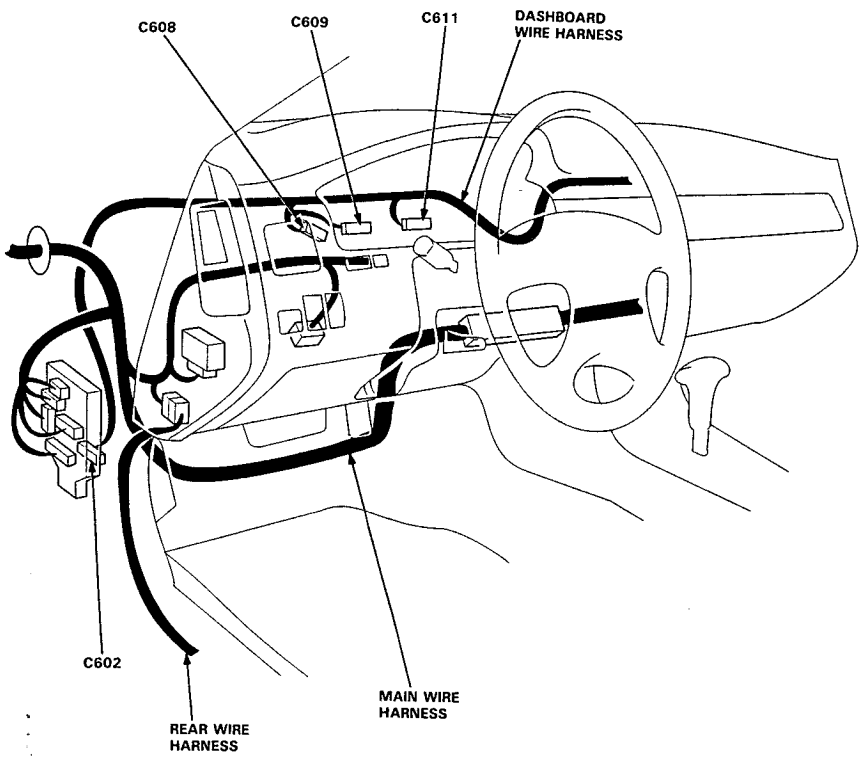

C602

①	YEL	10	GRN/RED
2	GRN/BLU	11	BLK/RED
3	YEL/RED	12	—
4	BLK/YEL	13	BLK
5	RED/BLU	14	YEL/GRN
6	GRN/BLU	15	GRN/YEL
7	BLU	16	RED/BLK
8	BLU/RED	17	YEL/WHT
9	GRN/WHT	18	YEL/BLK

C608

1	RED	6	BLK/YEL
②	GRN/RED	7	—
3	YEL/RED	8	RED/BLU
4	RED	9	—
5	WHT/BLU	10	—

C609 (A/T)

1	—	⑯	YEL/GRN
2	—	9	—
3	—	10	RED/WHT
4	ORN	⑮	GRN/WHT
5	GRN/YEL	12	GRN/RED
6	GRN/BLU	⑬	GRN
7	—	14	GRN/BLK

C611

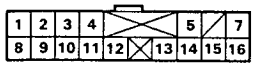

1	GRN/YEL	9	GRN/RED
2	GRN/BLU	10	RED/GRN
③	YEL	11	RED/BLU
4	BLU	12	BLU
5	ORN	13	BLU/RED
6	—	14	RED/BLK
7	BLK	15	WHT/GRN
8	RED	16	GRN/RED

NOTE: Different wires with the same color have been given a number suffix to distinguish them (for example YEL/BLK$_1$ and YEL/BLK$_2$ are not the same).
○: Related to Fuel and Emissions System.

(cont'd)

System Description

System Connectors [Dash and Floor] (cont'd)

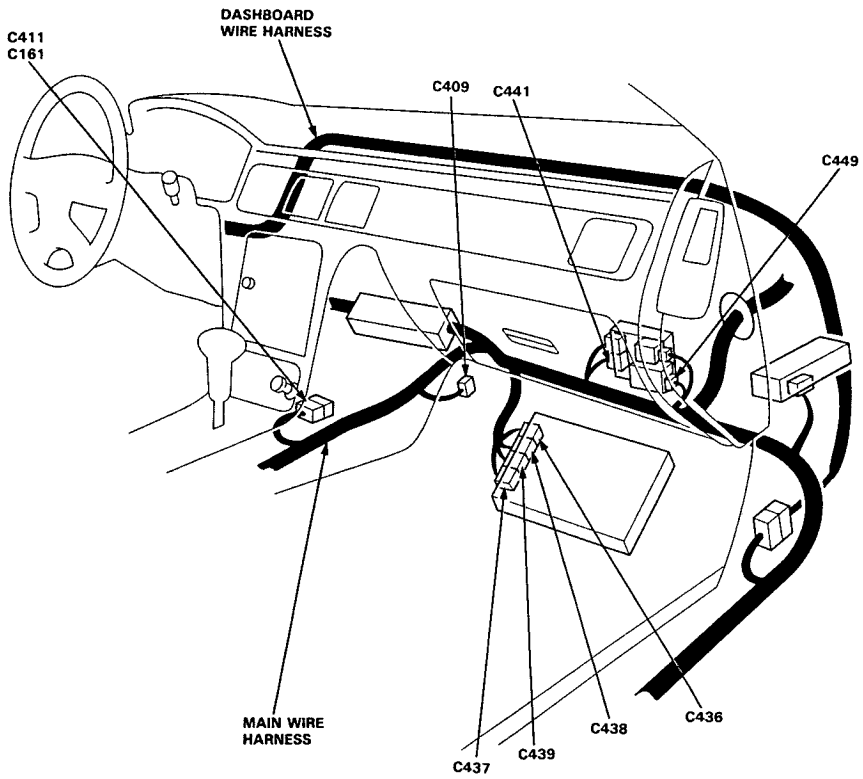

C409

①	BRN1
②	GRN/WHT3

C411 (A/T)

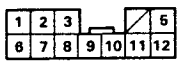

1	GRN/YEL	⑦	GRN/WHT
2	GRN/BLU	8	PNK
3	GRN/BLK	9	GRN/BLK
4	—	10	YEL
⑤	GRN	11	GRN/BLK
6	GRN/RED	12	ORN

C436

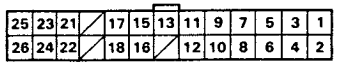

①	BRN	14	—
②	YEL	⑮	RED/BLU
③	RED1	⑯	WHT/GRN
④	GRN	⑰	BLU/RED
⑤	BLU	⑱	PNK (A/T)
⑥	PNK/WHT	19	—
⑦	GRN/BLK1	20	—
⑧	GRN/BLK2	㉑	YEL/GRN1
⑨	BLK/BLU	㉒	YEL/GRN2
⑩	ORN	㉓	BLK1
⑪	RED2	㉔	BLK2
⑫	LT GRN/YEL	㉕	YEL/BLK
⑬	GRN/RED	㉖	BLK/RED

C437

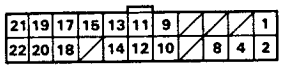

①	WHT/GRN	⑫	WHT/BLK
②	GRN/WHT1	⑬	YEL/GRN
3	—	⑭	WHT
④	BRN1	⑮	WHT/YEL
5	—	16	—
6	—	⑰	WHT/BLU
7	—	⑱	BLU/WHT (A/T)
⑧	BRN2	⑲	YEL/WHT1
⑨	WHT/RED	⑳	YEL/WHT2
⑩	GRN/RED	㉑	GRN/WHT2
⑪	RED/YEL	㉒	GRN/WHT3

C438

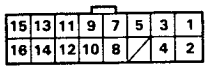

①	YEL/BLK	⑨	BLU/RED
②	BRN/BLK	⑩	ORN1
③	WHT/GRN (A/T)	⑪	ORN2
④	WHT/RED (A/T)	⑫	WHT
⑤	BLU/BLK	⑬	ORN/BLU
6	—	⑭	WHT/BLU
⑦	YEL/GRN	⑮	BLU/GRN
⑧	RED	⑯	BLU/YEL

C439

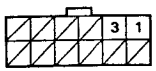

①	ORN/WHT	7	—
2	—	8	—
③	RED/BLU	9	—
4	—	10	—
5	—	11	—
6	—	12	—

C441 (A/T)

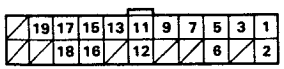

1	RED	12	WHT
2	GRN/WHT	⑬	WHT/GRN
③	WHT/BLU	14	—
4	—	15	WHT/BLU
⑤	YEL/GRN	⑯	PNK
6	BRN	17	ORN/BLU
⑦	RED/YEL	⑱	BLU/WHT
8	—	19	ORN
9	ORN	20	—
10	—	21	—
⑪	WHT/RED	22	—

C449

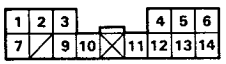

1	GRN/BLK	8	—
2	GRN/YEL	9	GRN/BLU
3	ORN/WHT	10	GRN
4	ORN	11	GRN/WHT
⑤	PNK	12	BLK
6	YEL	13	ORN/BLU
7	GRN/RED	14	BLK/YEL

NOTE: Different wires with the same color have been given a number suffix to distinguish them (for example YEL/BLK1 and YEL/BLK2 are not the same).
○: Related to Fuel and Emissions System.

(cont'd)

System Description

System Connectors [Dash and Floor] (cont'd)

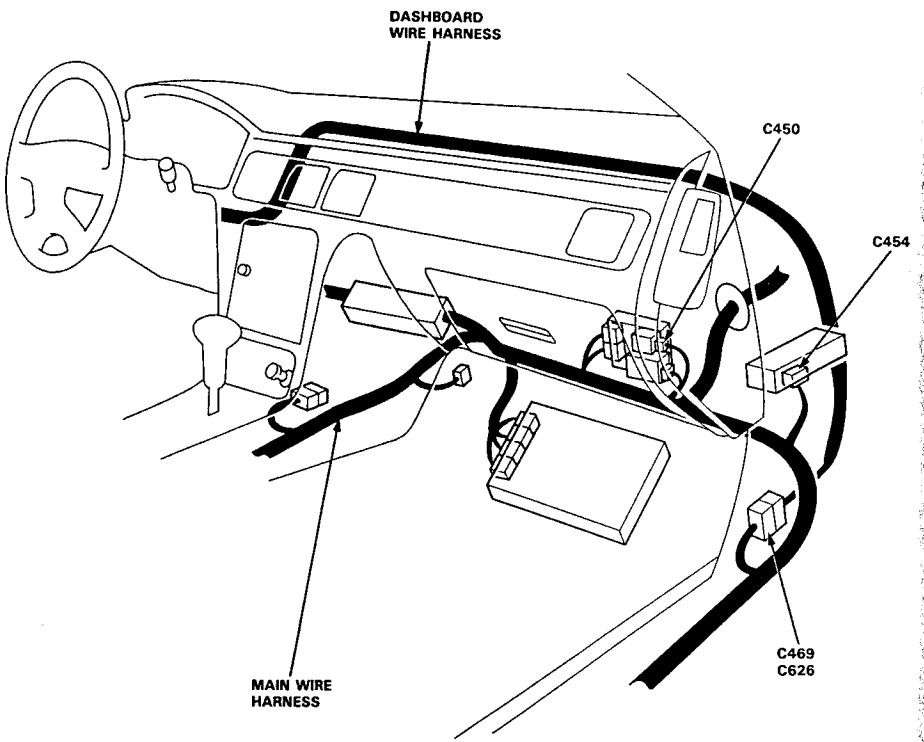

C450

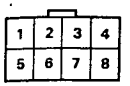

1	BLK	⑤	LT GRN/YEL
2	YEL/WHT	6	BLK/YEL
3	YEL/BLK	7	WHT/GRN
4	YEL	8	GRN

C454

①	RED/BLU
2	RED
3	YEL/BLK
4	YEL/BLK

C469

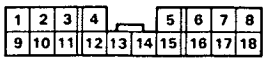

1	ORN (A/T)	10	GRN/RED (A/T)
2	GRN/YEL (A/T)	⑪	GRN/WHT (A/T)
3	GRN/BLU (A/T)	⑫	YEL/GRN (A/T)
4	PNK	13	GRN/BLK (A/T)
5	RED/BLU	14	RED/WHT (A/T)
6	ORN	15	WHT/GRN
⑦	GRN/RED	16	RED/GRN
8	BLU/RED	18	RED/YEL*
⑨	GRN (A/T)	17	WHT/GRN
		18	WHT/BLU

*: Canada

NOTE: Different wires with the same color have been given a number suffix to distinguish them (for example YEL/BLK$_1$ and YEL/BLK$_2$ are not the same).
O: Related to Fuel and Emissions System.

(cont'd)

System Description

System Connectors [Fuel Pump] (cont'd)

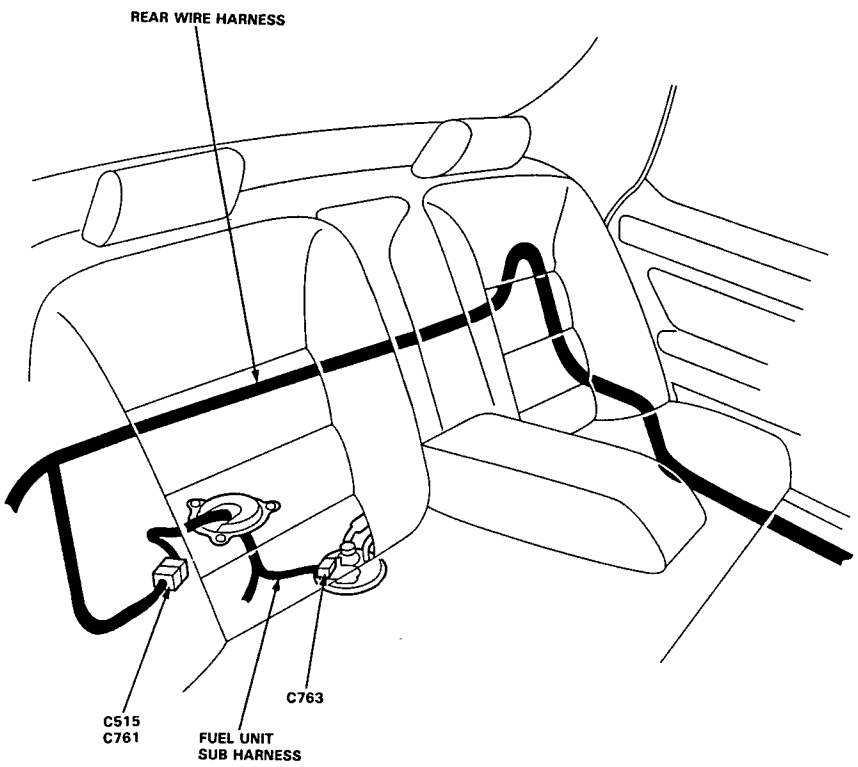

C515

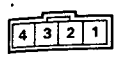

1	YEL
2	GRN/RED
3	YEL/WHT
4	BLK

C763

1	BLK
2	YEL

NOTE: Different wires with the same color have been given a number suffix to distinguish them (for example YEL/BLK$_1$ and YEL/BLK$_2$ are not the same).
O: Related to Fuel and Emissions System.

(cont'd)

Troubleshooting

Troubleshooting Guide

NOTE: Across each row in the chart, the systems that could be sources of a symptom are ranked in the order they should be inspected starting with ①. Find the symptom in the left column, read across to the most likely source, then refer to the page listed at the top of that column. If inspection shows the system is OK, try the next most likely system ②, etc.

PAGE / SYSTEM		PGM-FI									
		ENGINE CONTROL MODULE	HEATED OXYGEN SENSOR	MANIFOLD ABSOLUTE PRESSURE SENSOR	TOP DEAD CENTER/ CRANKSHAFT POSITION/ CYLINDER POSITION SENSOR	ENGINE COOLANT TEMPERA-TURE SENSOR	THROTTLE POSITION SENSOR	INTAKE AIR TEMPERA-TURE SENSOR	BARO-METRIC PRESSURE SENSOR	IGNITION OUTPUT SIGNAL	VEHICLE SPEED SENSOR
SYMPTOM		44	48, 50, 54	58, 62	64	66	68	70	72	74	76
MALFUNCTION INDICATOR LAMP (MIL) ** TURNS ON		or									
MALFUNCTION INDICATOR LAMP (MIL) ** BLINKS		or	or or	or	or or	6	7	10	13	15	17
ENGINE WON'T START		③			③					③	
DIFFICULT TO START ENGINE WHEN COLD		(BU)		③	②	①					
IRREGULAR IDLING	WHEN COLD FAST IDLE OUT OF SPEC	(BU)				③					
	ROUGH IDLE	(BU)		③							
	WHEN WARM RPM TOO HIGH	(BU)									
	WHEN WARM RPM TOO LOW	(BU)									
FREQUENT STALLING	WHILE WARMING UP	(BU)				③					
	AFTER WARMING UP	(BU)									
POOR PERFORM-ANCE	MISFIRE OR ROUGH RUNNING	(BU)		②	③						
	FAILS EMISSION TEST	(BU)	③	②							
	LOSS OF POWER	(BU)		③			②				

* If codes other then those listed above are indicated, count the number of blinks again. If the MIL is in fact blinking these codes, replace the ECM.

(BU) If the MIL is on while the engine is running, jump the service check connector. If no code is displayed (MIL stays on steady), the back-up system may be in operation.
Substitute a known-good ECM and recheck. If the indication goes away, replace the original ECM.

**USA:
MALFUNCTION INDICATOR LAMP (MIL)

CANADA:
CHECK ENGINE LIGHT

PGM-FI					IDLE CONTROL		FUEL SUPPLY				EMISSION CONTROL	
IGNITION TIMING ADJUSTER	ELECTRICAL LOAD DETECTOR	KNOCK SENSOR	A/T FI SIGNAL A	A/T FI SIGNAL B	IDLE AIR CONTROL VALVE	OTHER IDLE CONTROLS	FUEL INJECTORS	FUEL METERING	OTHER FUEL SUPPLY	INTAKE AIR	EXHAUST GAS RECIR-CULATION CONTROL SYSTEM	OTHER EMISSION CONTROLS
78	80	84	86	86	92	88	110	56	107	125	141	137
16	20	or	30	31	14		16	45			12	
							②		①			
					①	②						
					①		②				③	
					①	②						
	③				①		②					
					①	②			③			
					③				①		②	
							①				③	
								③				①
							③		①	③		

Troubleshooting

Self-diagnostic Procedures

I. When the Malfunction Indicator lamp (MIL) has been reported on, do the following:

1. Connect the service check connector terminals with a jumper wire as shown (the service check connector (2P) is located under the dash on the passenger side of the car). Turn the ignition switch on.

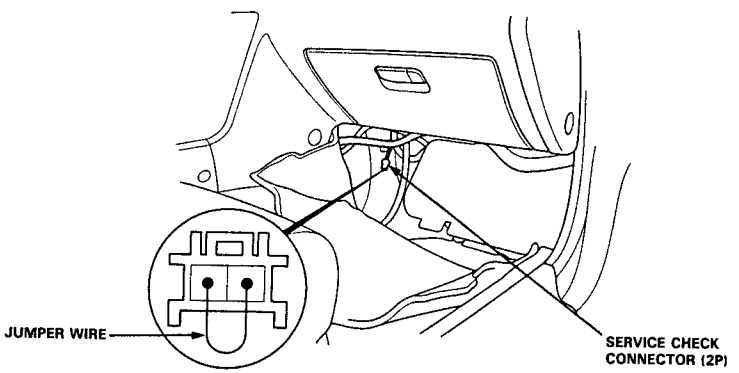

2. Note the Diagnositc Trouble Code (DTC): The MIL indicates a code by the length and number of blinks. The MIL can indicate simultaneous component problems by blinking separate codes, one after another. Codes 1 through 9 are indicated by individual short blinks. Codes 10 through 53 are indicated by a series of long and short blinks. The number of long blinks equals the first digit, the number of short blinks equals the second digit.

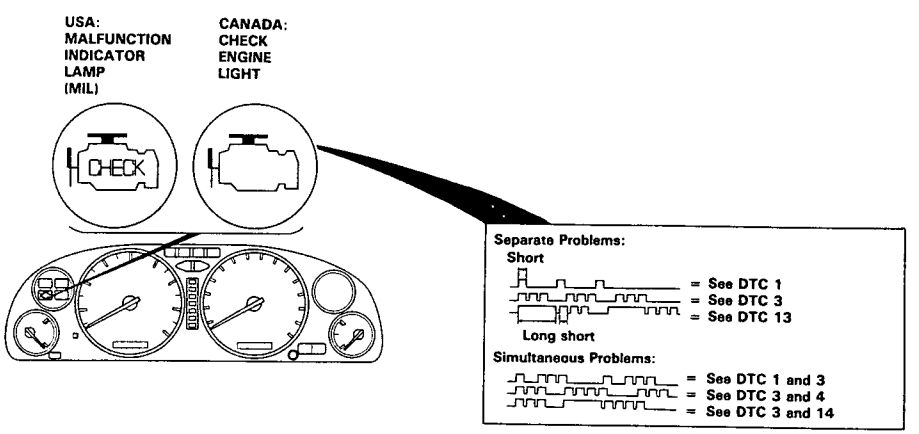

II. Engine Control Module (ECM)Reset Procedure

1. Turn the ignition switch off.

2. Remove the BACK UP (10 A) fuse from the under-hood fuse/relay box for 10 seconds to reset the ECM.

NOTE: Disconnecting the BACK UP fuse also cancels the radio preset stations and the clock setting. Make note of the radio presets before removing the fuse so you reset them.

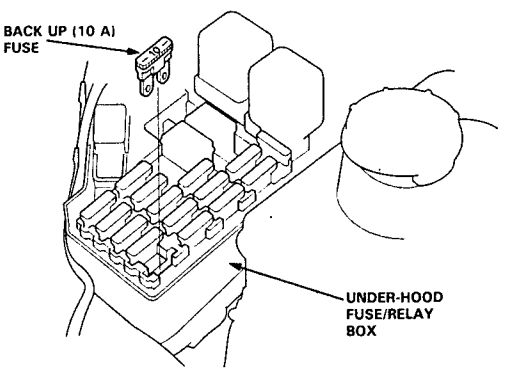

III. Final Procedure (this procedure must be done after any troubleshooting)

1. Remove the jumper wire.

NOTE: If the service check connector is jumped, the MIL will stay on.

2. Do the ECM Reset Procedure.

3. Set the radio preset stations and the clock setting.

(cont'd)

Self-diagnostic Procedures (cont'd)

DIAGNOSTIC TROUBLE CODE (DTC)	SYSTEM INDICATED	Page
0	ENGINE CONTROL MODULE (ECM)	11-44
1	HEATED OXYGEN SENSOR (HO2S)	11-48
3	MANIFOLD ABSOLUTE PRESSURE (MAP SENSOR)	11-58
5		11-62
4	CRANKSHAFT POSITION (CKP SENSOR)	11-64
6	ENGINE COOLANT TEMPERATURE (ECT SENSOR)	11-66
7	THROTTLE POSITION (TP SENSOR)	11-68
8	TOP DEAD CENTER POSITION (TDC SENSOR)	11-64
9	No. 1 CYLINDER POSITION (CYP SENSOR)	11-64
10	INTAKE AIR TEMPERATURE (IAT SENSOR)	11-70
12	EXHAUST GAS RECIRCULATION (EGR) SYSTEM	11-141
13	BAROMETRIC PRESSURE (BARO SENSOR)	11-72
14	IDLE AIR CONTROL (IAC VALVE)	11-92
15	IGNITION OUTPUT SIGNAL	11-74
16	FUEL INJECTOR	11-110
17	VEHICLE SPEED SENSOR (VSS)	11-76
18	IGNITION TIMING ADJUSTER	11-78
20	ELECTRICAL LOAD DETECTOR (ELD)	11-80
23	FRONT KNOCK SENSOR	11-84
30	A/T FI SIGNAL A	11-86
31	A/T FI SIGNAL B	11-86
41	HEATED OXYGEN SENSOR (HO2S) HEATER	11-50
43	FUEL SUPPLY SYSTEM	11-54
45	FUEL METERING	11-56
53	REAR KNOCK SENSOR	11-84

- If codes other than those listed above are indicated, verify the code. If the code indicated is not listed above, replace the ECM.
- The MIL may come on, indicating a system problem when, in fact, there is a poor or intermittent electrical connection. First, check the electrical connections, clean or repair connections if necessary.
- The MIL and D4 indicator light may light simultaneously when the self-diagnosis indicator blinks 3, 6, 7 and 17. Check the PGM-FI system according to the PGM-FI system troubleshooting, then recheck the D4 indicator light. If it lights, see page 14-50, 51.
- The MIL does not come on when there is a malfunction in the A/T FI signal or electrical load detector circuits. However, it will indicate the codes when the service check connector is jumped.

If the inspection for a particular failure code requires the test harness, remove the right door sill molding and the small cover on the right kick panel and pull the carpet back to expose the ECM. Unbolt the ECM cover. Connect the test harness. Check the system according to the procedure described for the appropriate code(s) listed on the following pages.

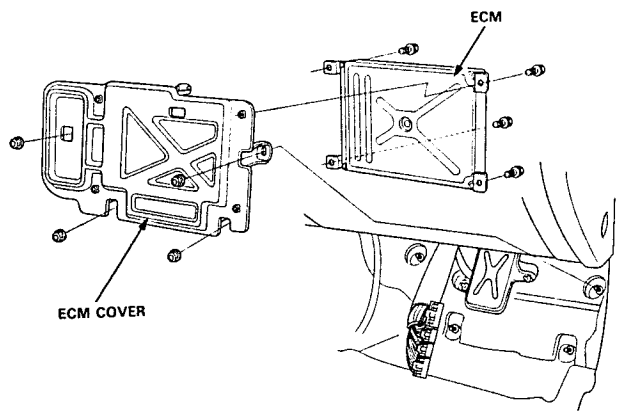

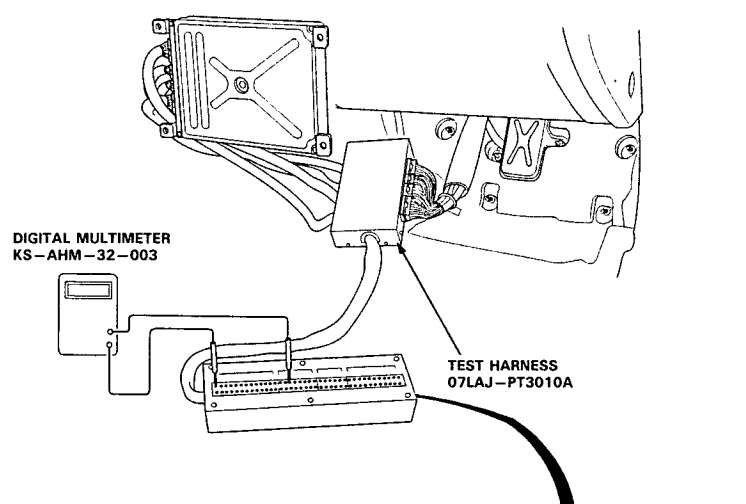

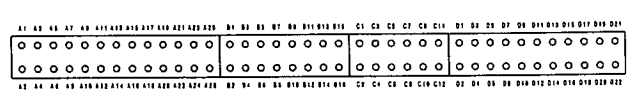

TERMINAL LOCATIONS

Self-diagnostic Procedures (cont'd)

CAUTION:
- **Puncturing the insulation on a wire can cause poor or intermittent electrical connections.**
- **For testing at connectors other than the test harness, bring the tester probe into contact with the terminal from the connector side of wire harness connectors in the engine compartment. For female connectors, just touch lightly with the tester probe and do not insert the probe.**

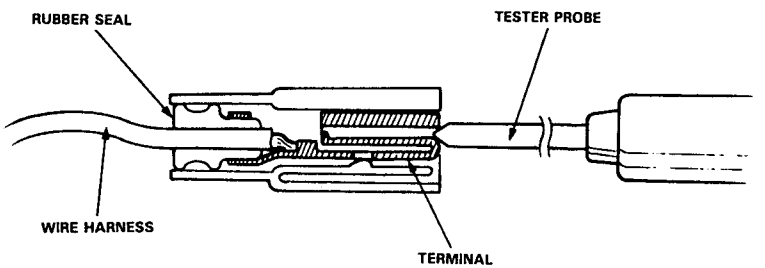

How to Read Flowcharts

A flowchart is designed to be used from start to final repair. It's like a map showing you the shortest distance. But beware: if you go off the "map" anywhere but a "stop" symbol, you can easily get lost.

START (bold type)	Describes the conditions or situation to start a troubleshooting flowchart.
ACTION	Asks you to do something; perform a test, set up a condition etc.
DECISION	Asks you about the result of an action, then sends you in the appropriate troubleshooting direction.
STOP (bold type)	The end of a series of actions and decisions, describes a final repair action and sometimes directs you to an earlier part of the flowchart to confirm your repair.

NOTE:
- The term " intermittent Failure" is used in these charts.It simply means a system may have had a failure, but it checks out OK at this time. If the Malfunction Indicator Lamp (MIL) on the dash does not come on, check for poor connections or loose wires at all connectors related to the circuit that you are troubleshooting (see illustration below).
- Most of the troubleshooting flowcharts have you reset the Engine Control Module (ECM) and try to duplicate the Diagnostic Trouble Code (DTC). If the problem is intermittent and you can't duplicate the code, do not continue through the flowchart. To do so will only result in confusion and, possibly, a needlessly replaced ECM.
- "Open" and "Short" are common electrical terms. An open is a break in a wire or at a connection. A short is an accidental connection of a wire to ground or to another wire. In simple electronics, this usually means something won't work at all. In complex electronics (like ECM's), this can sometimes mean something works, but not the way it's supposed to.
- If the electrical readings are not as specified when using the test harness, check the test harness connections before proceeding.

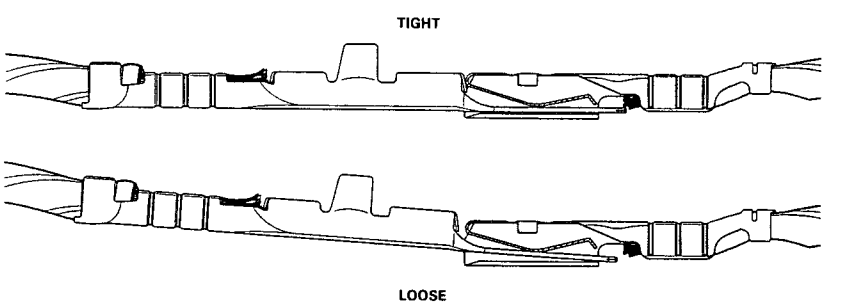

PGM-FI System

System Description

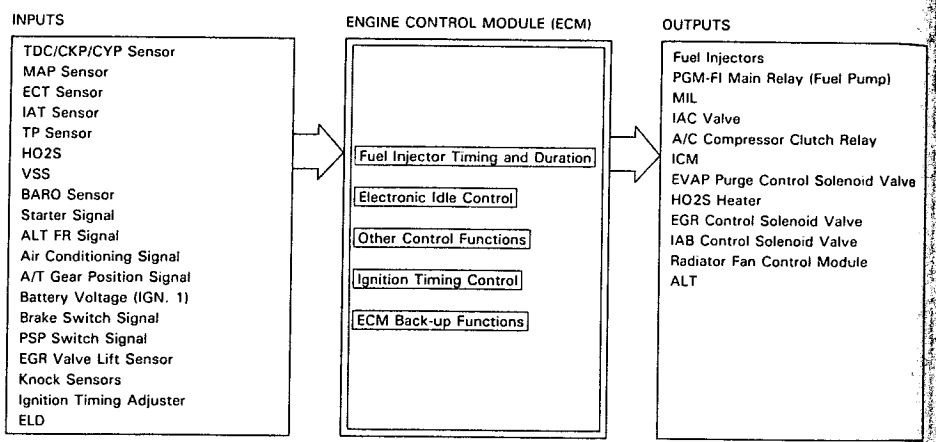

PGM-FI System
The PGM-FI system on this model is a sequential multiport fuel injection system.

Fuel Injector Timing and Duration
The ECM contains memories for the basic discharge durations at various engine speeds and manifold pressures. The basic discharge duration, after being read out from the memory, is further modified by signals sent from various sensors to obtain the final discharge duration.

Idle Air Control
Idle Air Control Valve (IAC Valve)
When the engine is cold, the A/C compressor is on, the transmission is in gear (A/T only) or the alternator is charging, the ECM controls current to the IAC Valve to maintain correct idle speed.

Ignition Timing Control
- The ECM contains memories for basic ignition timing at various engine speeds and manifold pressures. Ignition timing is also adjusted for engine coolant temperature.
- A Knock Control System is also used. When detonation is detected by the knock sensors, the ignition timing is retarded.

Other Control Functions
1. Starting Control
   When the engine is started, the ECM provides a rich mixture by increasing fuel injector duration.
2. Fuel Pump Control
   - When the ignition switch is initially turned on, the ECM supplies ground to the PGM-FI main relay that supplies current to the fuel pump for two seconds to pressurize the fuel system.
   - When the engine is running, the ECM supplies ground to the PGM-FI main relay that supplies current to the fuel pump.
   - When the engine is not running and the ignition is on, the ECM cuts ground to the PGM-FI main relay which cuts current to the fuel pump.
3. Fuel Cut-off Control
   - During deceleration with the throttle valve closed, current to the fuel injectors is cut off to improve fuel economy at speeds over 980 rpm (M/T) or 980 rpm (A/T).
   - Fuel cut-off action also takes place when engine speed exceeds, 7,100 rpm, regardless of the position of the throttle valve, to protect the engine from over-revving.
   - Fuel cut-off action also takes place when vehicle speed exceeds, 131 mph (210 km/h).

4. A/C Compressor Clutch Relay
   When the ECM receives a demand for cooling from the air conditioning system, it delays the compressor from being energized, and enriches the mixture to assure smooth transition to the A/C mode.

5. Evaporative Emission (EVAP) Purge Control Solenoid Valve
   When the engine coolant temperature is below 158°F (70°C), the ECM supplies a ground to the EVAP purge control solenoid valve which cuts vacuum to the EVAP purge control diaphragm valve.

6. Intake Air Bypass (IAB) Control Solenoid Valve
   When the engine rpm is below 4,900 rpm, the IAB control solenoid valve is activated by a signal from the ECM, intake air flows through the long intake path, then high torque is delivered. At speeds higher than 4,900 rpm, the solenoid valve is deactivated by the ECM, and intake air flows through the short intake path in order to reduce the resistance in airflow.

7. Exhaust Gas Recirculation (EGR) Control Solenoid Valve
   When the EGR is required for control of oxides of nitrogen (NOx) emissions, the ECM supplies ground to the EGR control solenoid valve which supplies regulated vacuum to the EGR valve.

8. Alternator (ALT) Control
   The system controls the voltage generated at the alternator in accordance with the electrical load and drive mode, and reduces the engine load to improve the fuel economy.

ECM fail-safe/back-up Functions
1. Fail-Safe Function
   When an abnormality occurs in a signal from a sensor, the ECM ignores that signal and assumes a pre-programmed value for that sensor that allows the engine to continue to run.

2. Back-up Function
   When an abnormality occurs in the ECM itself, the fuel injectors are controlled by a back-up circuit independent of the system in order to permit minimal driving.

3. Self-diagnosis Function [Malfunction Indicator Lamp (MIL)]
   When an abnormality occurs in a signal from a sensor, the ECM lights the MIL and stores the code in erasable memory. When the ignition is initially turned on, the ECM supplies ground for the MIL for two seconds to check the MIL bulb condition.

Troubleshooting Flowchart — Engine Control Module (ECM)

The Malfunction Indicator Lamp (MIL) never comes on (even for two seconds) after ignition is turned on.

Is the low oil pressure light on?
- NO → Inspect No. 1 BACK UP LIGHTS (10 A) fuse in the under-dash fuse/relay box.
  - Is the fuse OK?
    - NO → **Replace the fuse.**
    - YES → **Repair open in YEL between No. 1 BACK UP LIGHTS (10 A) fuse and gauge assembly.**
- YES ↓

Turn the ignition switch OFF.

Connect the test harness between the ECM and connectors (see page 11-39).

Connect A13 terminal to body ground.

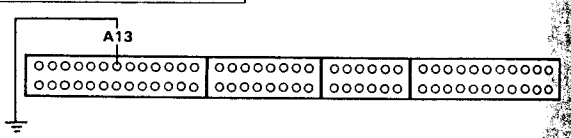

Turn the ignition switch ON.

Is the MIL on?
- NO → **– Replace the MIL bulb.**
  – Repair open in GRN/RED wire between ECM (A13) and gauge assembly.
- YES ↓

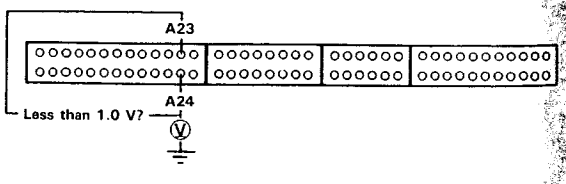

Measure voltage between body ground and the following terminals individually: A23, A24.

Is there less than 1.0 V?
- NO → **Repair open in wire(s) between ECM and G101 (located at left side of engine) that had more than 1.0 V.**
- YES ↓

Substitute a known-good ECM and recheck. If symptom/indication goes away, replace the original ECM.

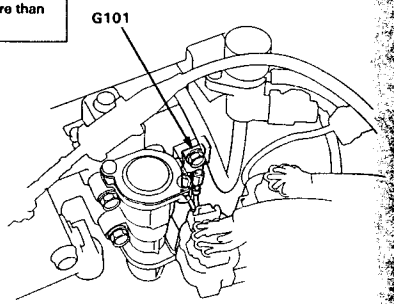

NOTE: When there is no code stored, the MIL will stay on if the service check connector is jumped.

The Malfunction Indicator Lamp (MIL) stays on or comes on after two seconds.

Connect the service check connector terminals with a jumper wire (see page 11-36).

Turn the ignition switch ON.

Does the MIL indicate any Diagnostic Trouble Code (DTC)?
- YES → **Go to self-diagnostic procedures (see page 11-34).**
- NO ↓

Remove the jumper wire from the service check connector terminals.

Try to start the engine.

Did the engine start?
- YES ↓
- NO ↓

Turn the ignition switch OFF.

Connect the test harness between the ECM and connectors (see page 11-39).

Turn the ignition switch ON.

Measure voltage between D4 (+) terminal and D22 (−) terminal.

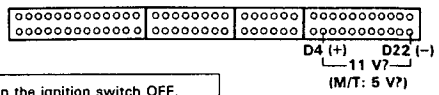

Is there approx. 11 V (M/T model: 5V)?
- YES → Connect the service check connector terminals with a jumper wire.
  - Measure voltage between D4 (+) terminal and D22 (−) terminal.
  - Is there approx. 11 V (M/T model: 5 V)?
    - NO → Remove the jumper wire from the service check connector terminals.
    - → (To page 11-46)
- NO → **Repair short to body ground in BRN wire between the ECM (D4), Transmission Control Module (TCM), ABS control unit and service check connector.**
  - * **– Repair open in BRN wire between ECM (D4) and service check connector.**
    – Repair open in GRN/WHT wire between service check connector and ECM (D22).
    - YES → Is there approx. 11 V (M/T model: 5 V)? (as above)

Remove and inspect the ECU (ECM) (10 A) fuse in the underhood fuse/relay box.

Is the fuse OK?
- NO → **Replace the fuse.**
- YES ↓

(To page 11-46)

*NOTE: After repair, disconnect the service check connector jumper wire, test drive the car, and recheck the MIL for a code.

(cont'd)

Troubleshooting Flowchart — Engine Control Module (ECM) (cont'd)

(From page 11-45)

Inspect the No. 2 ECU (ECM) (15 A) fuse in the under-dash fuse/relay box.

Is the fuse OK?
- NO → Replace the fuse.
- YES ↓

Turn the ignition switch ON.

Disconnect the 3P connector of each sensor one at a time:
- MAP sensor
- Throttle Position (TP) sensor
- Exhaust Gas Recirculation (EGR) valve lift sensor

Does the MIL remain ON?
- NO → Replace the sensor that caused the light to go out.
- YES ↓

Connect the service check connector terminals with a jumper wire.

Disconnect the 3P connector of the ignition timing adjuster.

Does the MIL indicate code 18?
- YES → Replace the ignition timing adjuster.
- NO ↓

Turn the ignition switch OFF.

Remove the jumper wire from the service check connector terminals.

Connect the test harness (see page 11-39).
Disconnect the "D" connector from the ECM only, not the main wire harness.

Check for continuity between body ground terminals D19, D20.

(To page 11-47)

(From page 11-45)

Turn the ignition switch OFF.

Disconnect "A" connector from the ECM.

Turn the ignition switch ON.

Is the MIL ON?
- NO → Substitute a known-good ECM and recheck. If symptom/indication goes away, replace the original ECM.
- YES ↓

Repair short to body ground in GRN/RED wire between the ECM (A13) and the MIL.

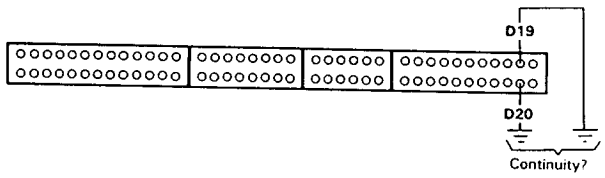

(From page 11-46)

Is there continuity?
- YES → Repair short to body ground in YEL/WHT wire between ECM (D19, D20) and TP sensor, EGR valve lift sensor, MAP sensor and ignition timing adjuster.
- NO ↓

Reconnect all the sensor connectors.
Reconnect the "D" connector to the ECM.

Turn the ignition switch ON.

Measure voltage between body ground and the following terminal individually: A26, B2.

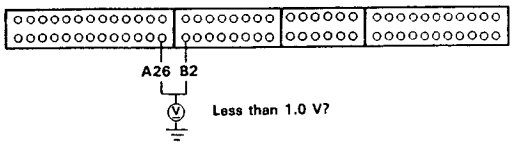

Is there less than 1.0 V?
- NO → Repair open in BLK/RED (A26) or BRN/BLK (B2) and G101 (located at left side of engine).
- YES ↓

Measure voltage between A26 (−) and the following: B1 (+) and A25 (+).

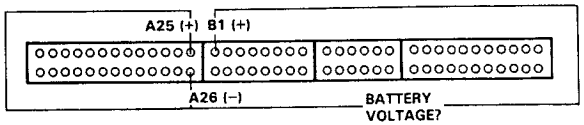

Is there battery voltage?
- NO → Repair open in YEL/BLK wire between ECM (A25, B1) and PGM-FI main relay.
  Check PGM-FI main relay and wiring connectors at PGM-FI main relay.
- YES ↓

Substitute a known-good ECM and recheck. If symptom/indication goes away, replace the original ECM.

PGM-FI System

Troubleshooting Flowchart — Heated Oxygen Sensor (HO2S)

The Malfunction Indicator Lamp (MIL) indicates Diagnostic Trouble Code (DTC) 1: A problem in the Heated Oxygen Sensor (HO2S) circuit.

The Heated Oxygen Sensor (HO2S) detects the oxygen content in the exhaust gas and signals the ECM. In operation, the ECM receives the signals from the sensor and varies the duration during which fuel is injected. The Heated Oxygen Sensor (HO2S) has an internal heater. The heater stabilizes the sensor's output. The Heated Oxygen Sensor (HO2S) is installed in the exhaust manifold.

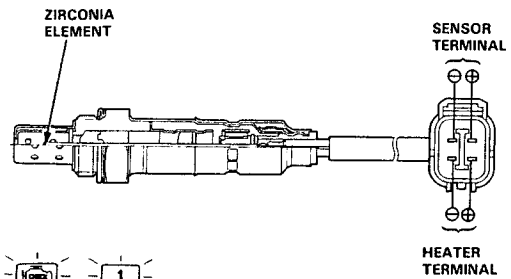

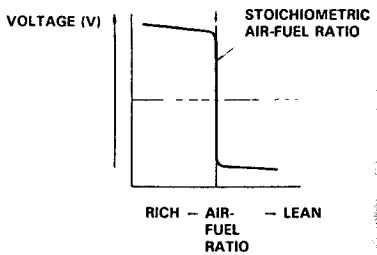

- The MIL has been reported on.
- With service check connector jumped (see page 11-36), code 1 is indicated.

Do the ECM Reset Procedure (see page 11-37).

Warm up engine to normal operating temperature (the radiator fan comes on).

Run engine for 60 seconds.

Road test with the automatic transmission in 2 position (M/T: 4th gear).
Starting at 1,600 rpm, accelerate using wide open throttle for at least 5 seconds. Then decelerate for at least 5 seconds with the throttle completely closed.

Is the MIL on and does it indicate code 1?

NO → Intermittent failure, system is OK at this time. Check for poor connections or loose wires at the C202 (HO2S) and ECM.

YES → Go to page 11-54 and perform test for code 43.

Troubleshooting Flowchart — Heated Oxygen Sensor (HO2S) Heater

The Malfunction Indicator Lamp (MIL) indicates Diagnostic Trouble Code (DTC) 41: A problem in the Heated Oxygen Sensor (HO2S) Heater circuit.

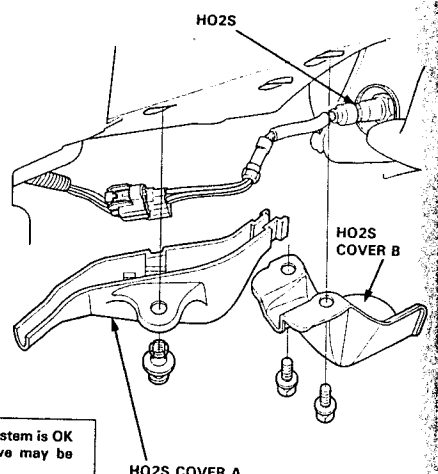

41

- Engine is running.
- The MIL has been reported on. With service check connector jumped (see page 11-36), code 41 is indicated.

Do the ECM Reset Procedure (see page 11-37).

Start the engine.

Is the MIL on and does it indicate code 41?

NO → Intermittent failure, system is OK at this time (test drive may be necessary). Check for poor connections or loose wires at C202 (HO2S) and ECM.

YES

Turn the ignition switch OFF.

Remove the HO2S covers.

Disconnect the 4P connector from the HO2S.

Measure resistance between terminals C and D on the HO2S.

Is there 10–40 Ω?

NO → Replace the HO2S.

YES

(To page 11-51)

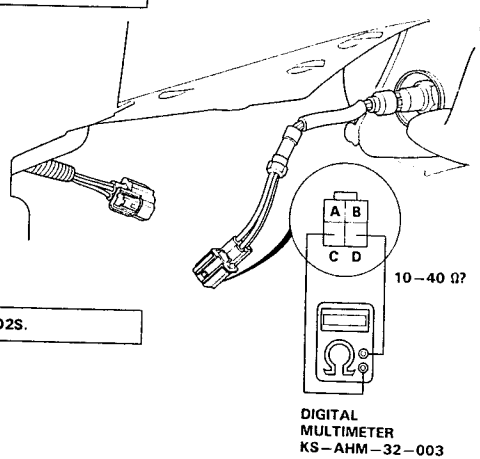

(From page 11-50)

Check for continuity to body ground on each terminal on the HO2S.

Is there continuity?

YES → Replace the HO2S.

NO

Check for continuity between terminal D and terminals A and B individually.

Is there continuity?

YES → Replace the HO2S.

NO

Turn the ignition switch ON.

At the HO2S harness, measure voltage between YEL/BLK (+) terminal and PNK/WHT (–) terminal.

Is there battery voltage?

YES → Turn the ignition switch OFF.

NO

Measure voltage between YEL/BLK (+) terminal and body ground.

Is there battery voltage?

NO → Repair open in YEL/BLK wire between HO2S and PGM-FI main relay.

YES

Turn the Ignition switch OFF.

(To page 11-52)

Disconnect the "A" connector from the ECM.

Turn the ignition switch ON.

At the HO2S harness, measure voltage between YEL/BLK (+) terminal and PNK/WHT (–) terminal.

Is there battery voltage?

YES → Repair short in PNK/WHT wire between ECM (A6) and HO2S.

NO

Turn the ignition switch OFF.

Reconnect the HO2S connector.

(To page 11-52)

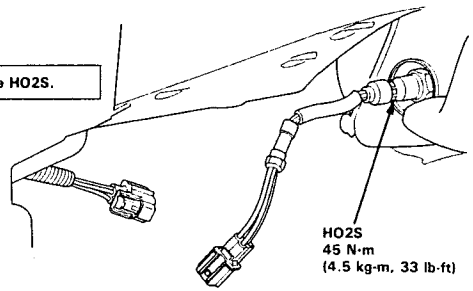

(cont'd)

Troubleshooting Flowchart — Heated Oxygen Sensor (HO2S) Heater (cont'd)

(From page 11-51)

Reconnect the 4P connector to the HO2S.

Connect the test harness "A" connector to the main wire harness only, not the ECM (see page 11-39).

Turn the ignition switch ON.

Measure voltage between A6 (+) terminal and A23 (−) terminal.

Is there battery voltage?

NO → **Repair open in PNK/WHT wire between ECM (A6) and HO2S.**

YES → **Substitute a known-good ECM and recheck. If symptom/indication goes away, replace the original ECM.**

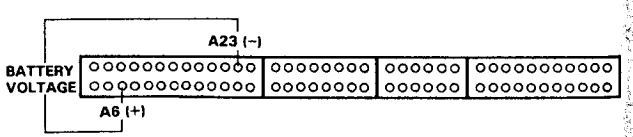

(From page 11-51)

Connect the test harness "A" connector to the main wire harness only, not the ECM (see page 11-39).

Connect an ammeter between terminals A6 (+) and A26 (−)

Turn the ignition switch ON.

* Monitor over a 5 minutes period.

Is the current less than 0.1 A?*

YES → **Replace the HO2S.**

NO → **Substitute a known-good ECM and recheck. If symptom/indication goes away, replace the original ECM.**

Troubleshooting Flowchart — Fuel Supply System

The Malfunction Indicator Lamp (MIL) indicates Diagnostic Trouble Code (DTC) 43: A problem in the Heated Oxygen Sensor (HO2S) circuit or a problem in the Fuel Supply System.

43

43

- The MIL has been reported on.
- With service check connector jumped (see page 11-36), code 43 is indicated.

Is the code 43 accompanied by the MIL and poor driveability? — YES → Go to Fuel Supply System (see page 11-107).

NO

Do the ECM Reset Procedure (see page 11-37).

Warm up engine to normal operating temperature (the radiator fan comes on).

Hold engine at 3,000 rpm for two minutes. (A/T: Transmission in N or P position.)

Is the MIL on and does it indicate code 43? — NO → Intermittent failure, system is OK at this time (test drive may be necessary). Check for poor connections or loose wires at C202 (HO2S) and ECM.

YES

From code 1 trouble-shooting (page 11-48).

Turn the ignition switch OFF.

Connect the test harness between the ECM and connectors (see page 11-39).

With the ignition switch OFF, wait for at least two minutes.

Install a jumper wire on the test harness between A6 and A26.

Turn the ignition switch ON.

Measure voltage between D14 (+) terminal and A26 (−) terminal as soon as the ignition switch is turned on.

(To page 11-55)

NOTE:
- Use DIGITAL MULTIMETER (KS—AHM—32—003)or equivalent.
- Use 2 Volt range.

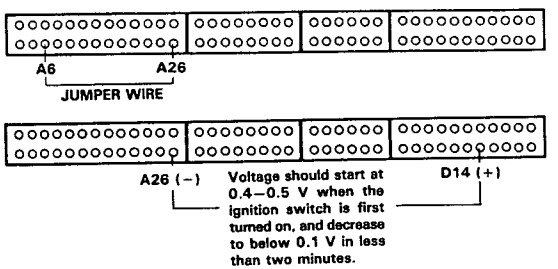

(From page 11-54)

Is there 0.1 V or less when the ignition switch is first turned on? — YES → Remove the HO2S covers.

NO

Remove the HO2S covers.

Disconnect the 4P connector from the HO2S.

Measure voltage between D14 (+) terminal and A26 (−) terminal.

Is there more than 0.1 V? — YES → Replace the HO2S.

NO

Disconnect the 4P connector from the HO2S.

Disconnect the "D" connector from the main wire harness.

Measure voltage between D14 (+) terminal and A26 (−) terminal.

Is there more than 0.1 V? — YES → Repair short in WHT wire between ECM (D14) and HO2S.

NO

Measure voltage at the engine wire harness side of the HO2S connector between GRN/WHT (−) and WHT (+).

Substitute a known-good ECM and recheck. If symptom/indication goes away, replace the original ECM.

Is there more than 0.1 V? — YES → Reconnect the 4P connector to the HO2S.

NO

Check for an open in WHT wire between ECM (D14) and HO2S. If wire is OK, repair open in GRN/WHT wire between ECM (D22) and HO2S.

Warm up engine to normal operating temperature (the radiator fan comes on).

Hold engine at 3,000 rpm for two minutes (A/T: Transmission in N or P position).

Measure voltage between D14 (+) terminal and A26 (−) terminal.

Is the voltage avobe 0.5 V at wide open and below 0.5 V when the throttle released? — NO → Replace the HO2S.

YES

Go to Fuel Supply System (see page 11-107).

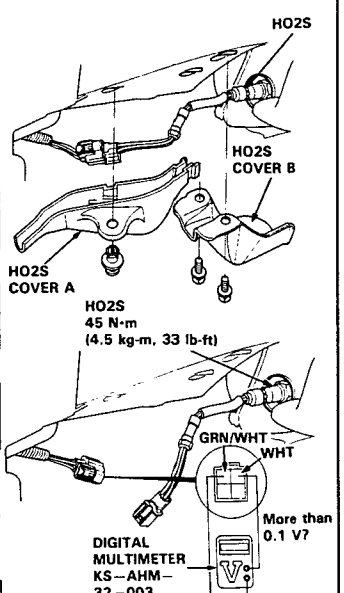

PGM-FI System

Troubleshooting Flowchart — Fuel Metering System

The Malfunction Indicator Lamp (MIL) indicates Diagnostic Trouble Code (DTC) 45: A problem in the Fuel Metering System.

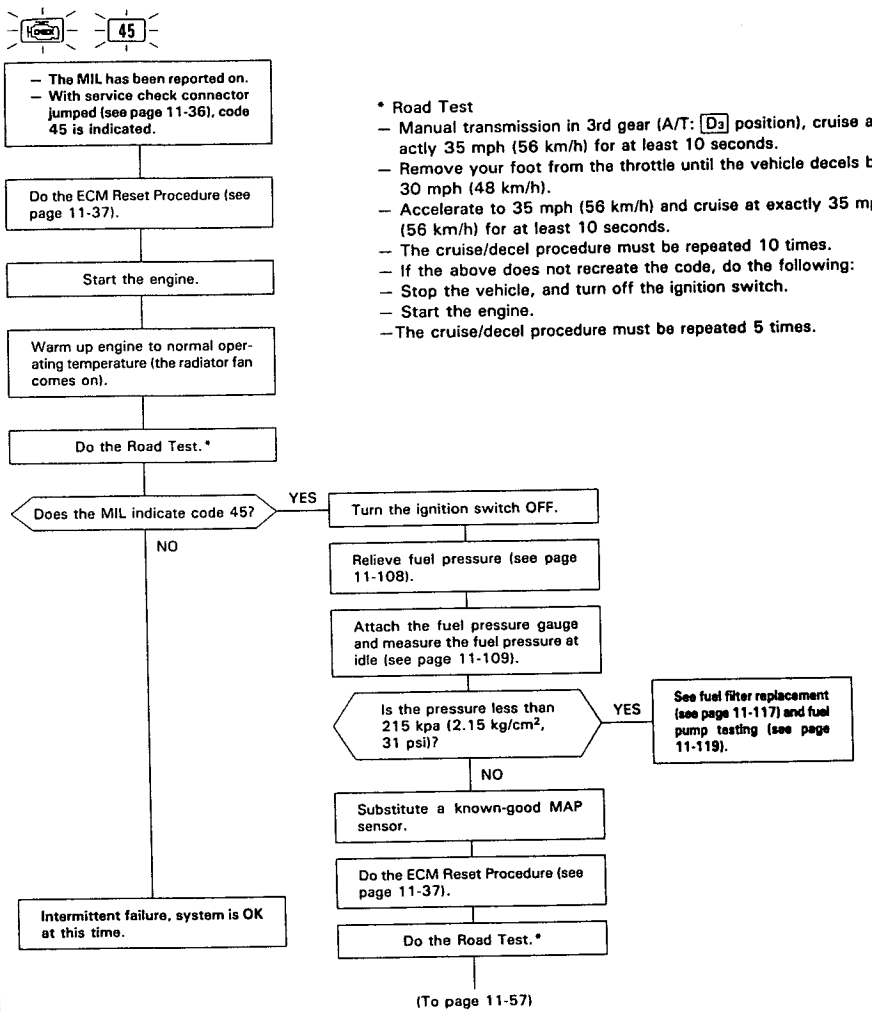

* Road Test
- Manual transmission in 3rd gear (A/T: D3 position), cruise at exactly 35 mph (56 km/h) for at least 10 seconds.
- Remove your foot from the throttle until the vehicle decels below 30 mph (48 km/h).
- Accelerate to 35 mph (56 km/h) and cruise at exactly 35 mph (56 km/h) for at least 10 seconds.
- The cruise/decel procedure must be repeated 10 times.
- If the above does not recreate the code, do the following:
- Stop the vehicle, and turn off the ignition switch.
- Start the engine.
- The cruise/decel procedure must be repeated 5 times.

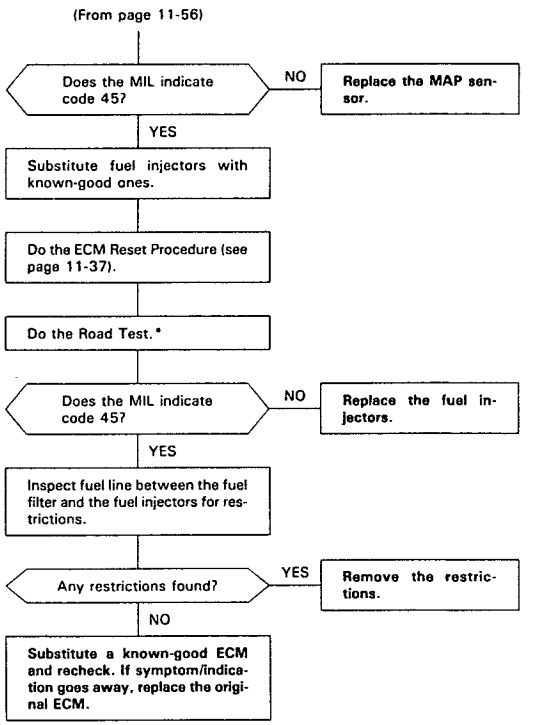

PGM-FI System

Troubleshooting Flowchart —Manifold Absolute Pressure (MAP) Sensor

3 — The Malfunction Indicator Lamp (MIL) indicates Diagnostic Trouble Code (DTC) 3: An electrical problem in the Manifold Absolute Pressure (MAP) Sensor system.

5 — The Malfunction Indicator Lamp (MIL) indicates Diagnostic Trouble Code (DTC) 5: A mechanical problem (vacuum leak) in the Manifold Absolute Pressure (MAP) Sensor System.

The MAP sensor converts manifold absolute pressure into electrical signals and inputs the ECM.

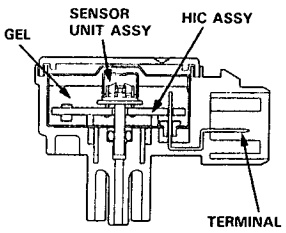

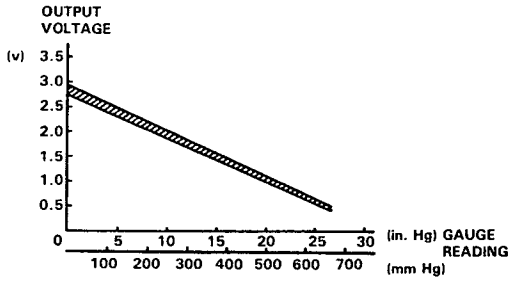

3

- Engine is warm and running.
- The MIL has been reported on.
- With service check connector jumped (see page 11-36), code 3 is indicated.

Do the ECM Reset Procedure (see page 11-37).

Start the engine and allow it to idle.

Is the MIL on and does it indicate code 3?

NO → Intermittent failure, system is OK at this time (test drive may be necessary). Check for poor connections or loose wires at C329 (MAP sensor) and ECM.

YES

Turn the ignition switch OFF.

Disconnect the 3P connector from the MAP sensor.

Turn the ignition switch ON.

(To page 11-59)

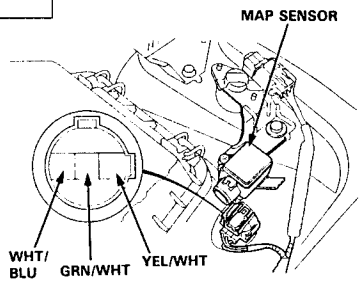

(From page 11-58)

Measure voltage between YEL/WHT (+) terminal and body ground.

Is there approx. 5V?

YES → Measure voltage between YEL/WHT (+) terminal and GRN/WHT (−) terminal.

Is there approx. 5V?

NO → Repair open in GRN/WHT wire between ECM (D21) and MAP sensor.

YES

NO

Turn the ignition switch OFF.

Connect the test harness "D" connector to the ECM only, not to the main wire harness (see page 11-39).

Turn the ignition switch ON.

Measure voltage between D19 (+) terminal and D21 (−) terminal

Is there approx. 5 V?

YES → Measure voltage between WHT/BLU (+) terminal and GRN/WHT (−) terminal.

NO

Repair open in YEL/WHT wire between ECM (D19) and MAP sensor.

Substitute a known-good ECM and recheck. If symptom/indication goes away, replace the original ECM.

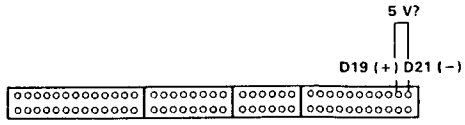

A/T only

Turn the ignition switch OFF.

Disconnect the 22P connector from the TCM.

Turn the ignition switch ON.

Is there approx. 5V?

YES

Replace the TCM.

NO

Is there approx. 5 V?

YES

Turn the ignition switch OFF.

Reconnect the 3P connector to the MAP sensor.

Connect the test harness between the ECM and connector (see page 11-39).

Turn the ignition switch ON.

(To page 11-60)

(To page 11-60)

(cont'd)

Troubleshooting Flowchart — Manifold Absolute Pressure (MAP) Sensor (cont'd)

(From page 11-59)

Turn the ignition switch OFF.

Connect the test harness "D" connector to the ECM only, not to the main wire harness (see page 11-39).

Turn the ignition switch ON.

Measure voltage between D17 (+) terminal and D21 (−) terminal.

Is there approx. 5 V?

YES

- Repair short in WHT/BLU wire between ECM (D17), TCM (A/T) and MAP sensor.
- Repair open in WHT/BLU wire between ECM (D17) and MAP sensor.

NO

Substitute a known-good ECM and recheck. If prescribed voltage is now available, replace the original ECM.

(From page 11-59)

Measure voltage between D17 (+) terminal and D21 (−) terminal.

Is there approx. 3 V?

NO

Replace the MAP sensor.

YES

Substitute a known-good ECM and recheck. If symptom/indication goes away, replace the original ECM.

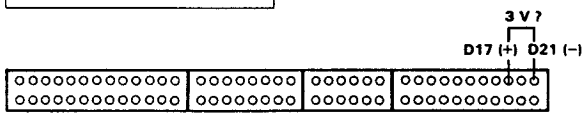

Troubleshooting Flowchart — Manifold Absolute Pressure (MAP) Sensor

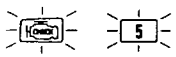

- The MIL has been reported on.
- With service check connector jumped (see page 11-36), code 5 is indicated.

Do the ECM Reset Procedure (see page 11-37).

Start the engine and keep engine speed at 2,000 rpm for one minute with manual transmission in neutral (A/T: P or N position).

Is the MIL on and does it indicate code 5?

NO:
- Intermittent failure, system is OK at this time (test drive may be necessary).
- Check vacuum hoses, pipes and connections.
- Make sure all connectors are secure.

YES:

Turn the ignition switch OFF.

Disconnect #21 hose from the throttle body, connect vacuum pump to the hose and apply vacuum.

Does it hold vacuum?

NO: Connect a vacuum pump to the MAP sensor and apply vacuum.

Does it hold vacuum?

NO: Replace the MAP sensor.

YES: Repair vacuum leak in hose routing between MAP sensor and intake manifold.

YES: Connect a T-fitting from a vacuum gauge between the throttle body base and #21 hose.

(To page 11-63)

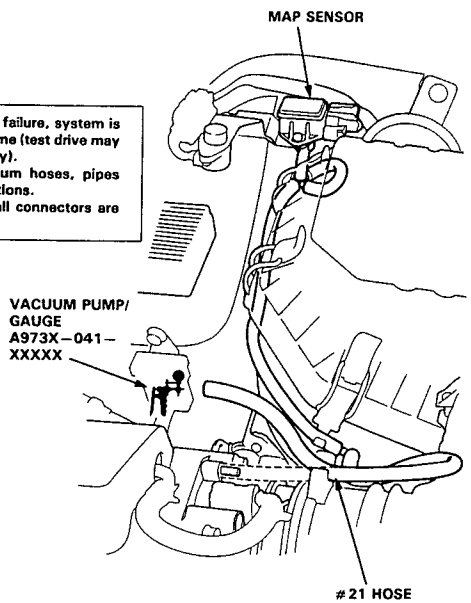

(From page 11-62)

Start the engine.

Is there manifold vacuum?

NO: Remove restriction from throttle body.

YES:

Turn the ignition switch OFF.

Connect the test harness between the ECM and connectors (see page 11-39).

Turn the ignition switch ON.

Measure voltage between D17 (+) terminal and D21 (−) terminal.

Is there approx. 3 V?

NO: Replace the MAP sensor.

YES:

Start the engine and allow it to idle.

Is there approx. 1 V?

NO: Replace the MAP sensor.

YES: Substitute a known-good ECM and recheck. If symptom/indication goes away, replace the original ECM.

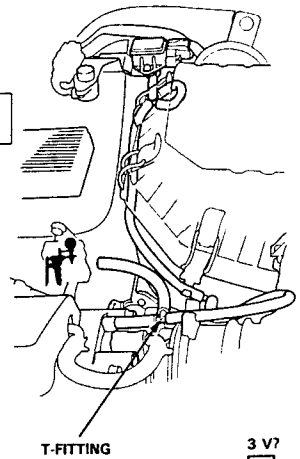

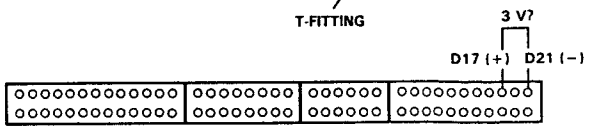

Troubleshooting Flowchart — TDC/CKP/CYP Sensor

4 — The Malfunction Indicator Lamp (MIL) indicates Diagnostic Trouble Code (DTC) 4: A problem in the Crankshaft Position (CKP) Sensor circuit.

8 — The Malfunction Indicator Lamp (MIL) indicates Diagnostic Trouble Code (DTC) 8: A problem in the Top Dead Center (TDC) Sensor circuit.

9 — The Malfunction Indicator Lamp (MIL) indicates Diagnostic Trouble Code (DTC) 9: A problem in the Cylinder Position (CYP) Sensor circuit.

The CKP Sensor determines timing for fuel injection and ignition of each cylinder and also detects engine speed. The TDC Sensor determines ignition timing at start-up (cranking) and when crank angle is abnormal. The CYP Sensor detects the position of No. 1 cylinder for sequential fuel injection to each cylinder.

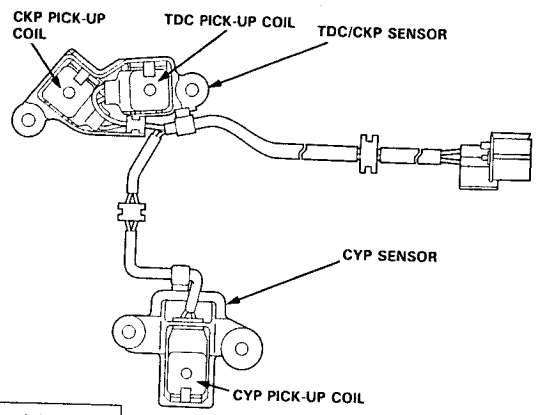

4 or 8 or 9

- The MIL has been reported on.
- With service check connector jumped (see page 11-36), code 4, 8 and/or 9 are indicated.

Do the ECM Reset procedure (see page 11-37).

Start the engine.

Is the MIL on and does it indicate code 4, 8 or 9?

NO → Intermittent failure, system is OK at this time (test drive may be necessary). Check for poor connections or loose wires at C308 (located at left shock tower), C117 (TDC/CKP/CYP sensor) and ECM.

YES

Turn the ignition switch OFF.

Disconnect the 6P connector from the TDC/CKP/CYP sensor.

(To page 11-65)

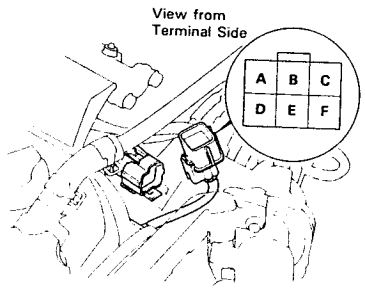

(From page 11-64)

Measure resistance between terminals of the indicated sensor. *see table

Is there 650–850 Ω?

NO → Replace the TDC/CKP/CYL sensor (see section 6).

YES

Check for continuity to body ground on all terminals individually.

Is there continuity?

YES → Replace the TDC/CKP/CYL sensor (see section 6).

NO

Reconnect the connector.

Connect the test harness to the main wire harness only, not to the ECM (see page 11-39).

Measure resistance between terminals of the indicated sensor on test harness. *see table

Is there 650–850 Ω?

NO → Repair open in the indicated sensor wires. *see table

YES

Check for continuity to body ground on, B13 or B11 terminals.

Is there continuity?

YES → Repair short in the indicated sensor wires. *see table

NO

Substitute a known-good ECM and recheck. If symptom/indication goes away, replace the original ECM.

*:

SENSOR	DTC	SENSOR TERMINAL	ECM TERMINAL	WIRE COLOR
CKP	4	B	B16	BLU/YEL
		E	B15	BLU/GRN
TDC	8	A	B14	WHT/BLU
		D	B13	ORN/BLU
CYP	9	C	B12	WHT
		F	B11	ORN

CKP:

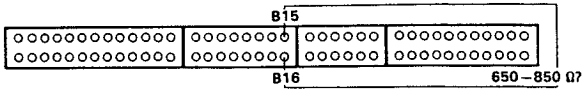

TDC:

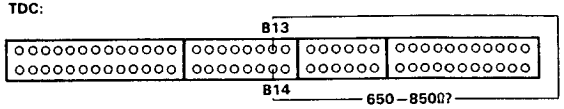

CYP:

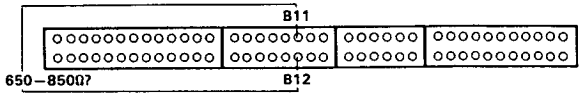

Troubleshooting Flowchart — Engine Coolant Temperature (ECT) Sensor

The Malfunction Indicator Lamp (MIL) indicates Diagnostic Trouble Code (DTC) 6: A problem in the Engine Coolant Temperature (ECT) Sensor circuit.

The ECT Sensor is a temperature dependant resistor (thermistor). The resistance of the thermistor decreases as the engine coolant temperature increases as shown below.

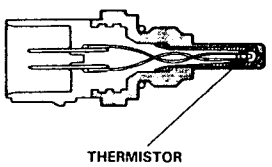

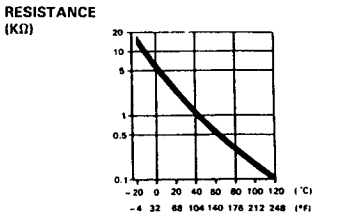

- The MIL has been reported on.
- With service check connector jumped (see page 11-36), code 6 is indicated.

Do the ECM Reset Procedure (see page 11-37).

Turn the ignition switch ON.

Is the MIL on and does it indicate code 6?

NO → Intermittent failure, system is OK at this time (test drive may be necessary). Check for poor connections or loose wires at C219 (located under the hood on the front right side of the car), C127 (ECT sensor) and ECM.

YES

Warm up engine to normal operating temperature (the radiator fan comes on).

Turn the ignition switch OFF.

Disconnect the 2P connector from the ECT sensor.

Measure resistance between the 2 terminals on the ECT sensor.

Is there 200–400 Ω?

NO → Replace the ECT sensor.

YES

(To page 11-67)

(From page 11-66)

Turn the ignition switch ON.

Measure voltage between YEL/GRN and body ground.

Is there approx. 5 V?

YES → Measure voltage between YEL/GRN (+) terminal and GRN/WHT (−) terminal.

Is there approx. 5 V?

NO → Repair open in GRN/WHT wire between ECM (D22) and ECT sensor.

YES → Substitute a known-good ECM and recheck. If symptom/indication goes away, replace the original ECM.

NO

Turn the ignition switch OFF.

A/T only

Disconnect the 22P connector from TCM.

Turn the ignition switch ON.

Is there approx. 5 V?

YES → Replace the TCM.

NO

turn the ignition switch OFF.

Connect the test harness "D" connector to the ECM only, not to the main wire harness (see page 11-39).

Turn the ignition switch ON.

Measure voltage between D13 (+) terminal and D22 (−) terminal.

Is there approx. 5 V?

YES → Repair open or short in YEL/GRN wire between ECM (D13), TCM and ECT sensor.

NO

Substitute a known-good ECM and recheck. If symptom/indication goes away, replace the original ECM.

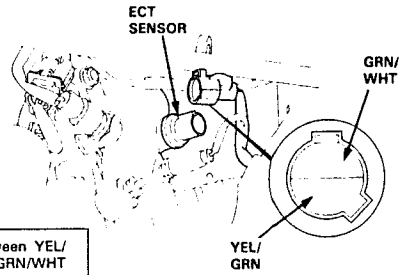

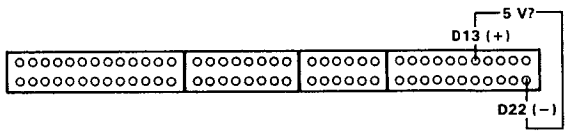

Troubleshooting Flowchart — Throttle Position (TP) Sensor

The Malfunction Indicator Lamp (MIL) indicates Diagnostic Trouble Code (DTC) 7: A problem in the Throttle Position (TP) Sensor circuit.

The TP Sensor is a potentiometer. It is connected to the throttle valve shaft. As the throttle position changes, the TP Sensor varies the voltage signal to the ECM.

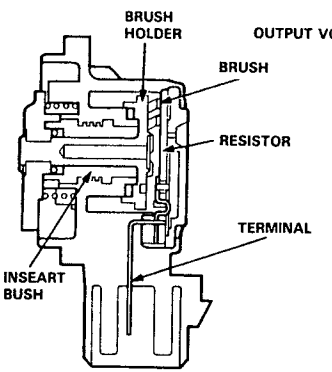

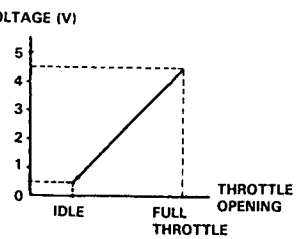

- Engine is running.
- The MIL has been reported on.
- With service check connector jumped (see page 11-36), code 7 is indicated.

Do the ECM Reset Procedure (see page 11-37).

Start the engine.

Is the MIL on and does it indicate code 7?

NO → Intermittent failure, system is OK at this time (test drive may be necessary). Check for poor connections or loose wires at C219 (located under the hood on the front right side of the car), C124 (TP sensor) and ECM.

YES

Turn the ignition switch OFF.

Disconnect the 3P connector from the TP sensor.

Turn the ignition switch ON.

Measure voltage between YEL/WHT (+) terminal and GRN/WHT (−) terminal.

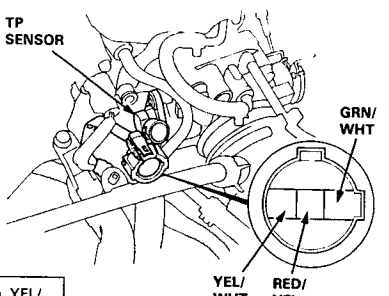

Is there approx. 5 V?

NO → Measure voltage between YEL/WHT (+) terminal and body ground.

YES

(To page 11-69)

(To page 11-69)

(From page 11-68)

Turn the ignition switch OFF.

Reconnect the 3P connector.

Connect the test harness between the ECM and connectors (see page 11-39).

Turn the ignition switch ON.

Measure voltage between D11 (+) terminal and D22 (−) terminal.

Is voltage 0.5 V at full close throttle, and approx. 4.5 V at full open throttle?
NOTE: There should be a smooth transition from 0.5 V to approx. 4.5 V as the throttle is depressed.

NO → A/T only:

Turn the ignition switch OFF.

Disconnect the 22P connector from the TCM.

Turn the ignition switch ON.

Is voltage 0.5 V at full close throttle, and 4.5 V at full open throttle?
NOTE: There should be a smooth transition from 0.5 V to 4.5 V as the throttle is depressed.

NO → Replace the TP sensor. Repair open or short in RED/YEL wire between ECM (D11), TCM and TP sensor.

YES → Replace the TCM.

YES → Substitute a known-good ECM and recheck. If symptom/indication goes away, replace the original ECM.

(From page 11-68)

Is there approx. 5 V?

YES → Repair open in GRN/WHT wire between ECM (D22) and TP sensor.

NO

Turn the ignition switch OFF.

Connect the test harness between the ECM and connectors (see page 11-39).

Turn the ignition switch ON.

Measure voltage between D20 (+) terminal and D22 (−) terminal.

Is there approx. 5 V?

YES → Repair open in YEL/WHT wire between ECM (D20) and TP sensor.

NO → Substitute a known-good ECM and recheck. If prescribed voltage is now available, replace the original ECM.

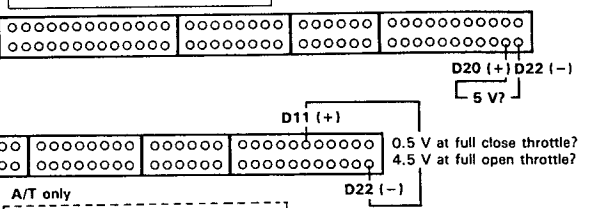

Troubleshooting Flowchart — Intake Air Temperature (IAT) Sensor

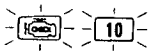

The Malfunction Indicator Lamp (MIL) indicates Diagnostic Trouble Code (DTC) 10: A problem in the Intake Air Temperature (IAT) Sensor circuit.

The IAT Sensor is a temperature dependant resistor (thermistor). The resistance of the thermistor decreases as the intake air temperature increases as shown below.

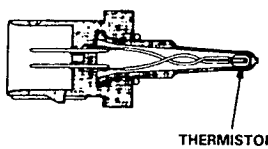

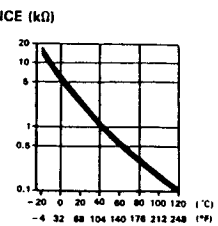

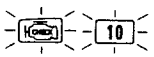

- The MIL has been reported on.
- With service check connector jumped (see page 11-36), code 10 is indicated.

Do the ECM Reset Procedure (see page 11-37).

Turn the ignition switch ON.

Is the MIL on and does it indicate code 10?

- NO → Intermittent failure, system is OK at this time (test drive may be necessary). Check for poor connections or loose wires at C219 (located under the hood on the front right side of the car), C125 (IAT sensor) and ECM.
- YES ↓

Turn the ignition switch OFF.

Disconnect the 2P connector from the IAT sensor.

Measure resistance between the 2 terminals on the IAT sensor.

Is there 0.4 – 4.0 kΩ?

- NO → Replace the IAT sensor.
- YES ↓

(To page 11-71)

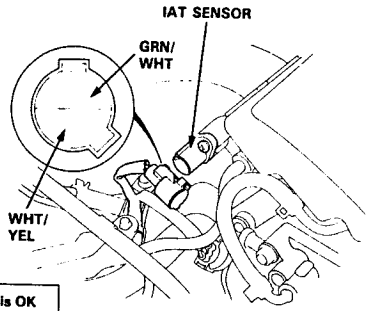

(From page 11-70)

Turn the ignition switch ON.

Measure voltage between WHT/YEL (+) terminal and body ground.

Is there approx. 5 V?

- YES → Measure voltage between WHT/YEL (+) terminal and GRN/WHT (–) terminal.
  - Is there approx. 5 V?
    - NO → Repair open in GRN/WHT wire between ECM (D22) and IAT sensor.
    - YES → Substitute a known-good ECM and recheck. If symptom/indication goes away, replace the original ECM.
- NO ↓

Turn the ignition switch OFF.

Connect the test harness "D" connector to the ECM only, not to the main wire harness (see page 11-39).

Turn the ignition switch ON.

Measure voltage between D15 (+) terminal and D22 (–) terminal.

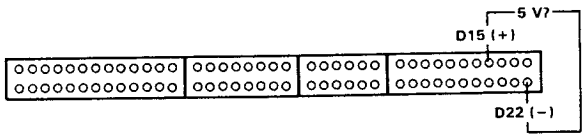

Is there approx. 5 V?

- YES → Repair open or short in WHT/YEL wire between ECM (D15) and IAT sensor.
- NO ↓

Substitute a known-good ECM and recheck. If prescribed voltage is now available, replace the original ECM.

PGM-FI System

Troubleshooting Flowchart — Barometric Pressure (BARO) Sensor

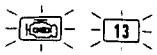

The Malfunction Indicator Lamp (MIL) indicates Diagnostic Trouble Code (DTC) 13: A problem in the Barometric Pressure BARO Sensor.

The BARO Sensor is built into the ECM.

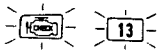

- The MIL has been reported on.
- With service check connector jumped (see page 11-36), code 13 is indicated.

Do the ECM Reset Procedure (see page 11-37).

Turn the ignition switch ON.

Is the MIL on and does it indicate code 13?

NO → **Intermittent failure, system is OK at this time (test drive may be necessary).**

YES → **Substitute a known-good ECM and recheck. If symptom/indication goes away, replace the original ECM.**

Troubleshooting Flowchart — Ignition Output Signal

15

The Malfunction Indicator Lamp (MIL) indicates Diagnostic Trouble Code (DTC) 15: A problem in the Ignition Output Signal circuit.

– The MIL has been reported on.
– With service check connector jumped (see page 11-36), code 15 is indicated.

Do the ECM Reset Procedure (see page 11-37).

Start the engine.

NOTE: If the engine won't start, it may take 20 seconds of cranking to set the code.

Is the MIL on and does it indicate code 15?

NO → **Intermittent failure, system is OK at this time (test drive may be necessary). Check for poor connections or loose wires at C203 (Ignition Control Module (ICM)) and ECM.**

YES

Turn the ignition switch OFF.

Disconnect the 4P connector from the ICM.

Turn the ignition switch ON.

Measure voltage between BLK/YEL (+) terminal and body ground.

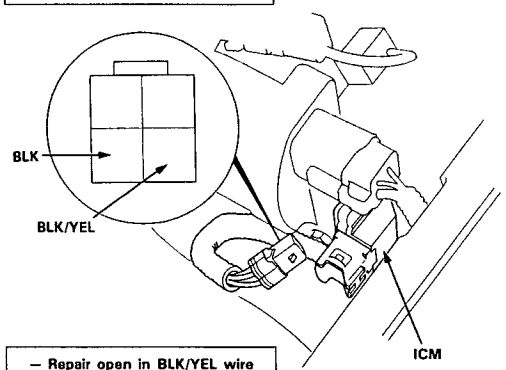

Is there battery voltage?

NO → **– Repair open in BLK/YEL wire between the 4P connector and ignition coil.**
– Repair open in BLK/YEL wire between the ignition coil and ignition switch.

YES

Measure voltage between BLK/YEL (+) terminal and BLK (–) terminal.

Is there battery voltage?

NO → **Repair open in BLK wire between ICM and G101 (located at left side of engine).**

YES

(To page 11-75)

(From page 11-74)

Turn the ignition switch OFF.

Reconnect the 4P connector.

Connect the test harness between the ECM and connectors (see page 11-39).

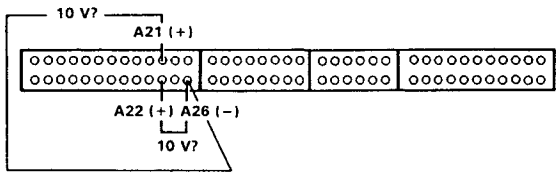

Turn the ignition switch ON.

Measure voltage individually between A21 (+), A22 (+) terminals and A26 (–) terminal.

Is there approx. 10 V?

NO → **– Replace the ICM.**
– Repair open or short in YEL/GRN wire between ICM and ECM (A21 or A22).

NOTE: If the YEL/GRN wire was shorted, the ICM may be damaged.

YES

Substitute a known-good ECM and recheck. If symptom/indication goes away, replace the original ECM.

Troubleshooting Flowchart — Vehicle Speed Sensor (VSS)

17

The Malfunction Indicator Lamp (MIL) indicates Diagnostic Trouble Code (DTC) 17: A problem in the Vehicle Speed Sensor (VSS) circuit.

The VSS generates a pulsing signal when the front wheels turn.

- **The MIL has been reported on.**
- **With service check connector jumped (see page 11-36), code 17 is indicated.**

Do the ECM Reset Procedure (see page 11-37).

Road test necessary with the automatic transmission in 2 position (M/T: 2nd gear) accelerate to 4,000 rpm, then decelerate to 1,500 rpm with throttle fully closed.

Is the MIL on and does it indicate code 17?

NO → **Intermittent failure, system is OK at this time. Check for poor connections or loose wires at C308 (located at left shock tower), C120 (VSS) and ECM.**

YES

Block rear wheels and set the parking brake. Jack up the front of the car and support with safety stands.

WARNING **Block rear wheel before jacking up front of car.**

Turn the ignition switch OFF.

Connect the test harness between the ECM and connectors (see page 11-39).

Turn the ignition switch ON.

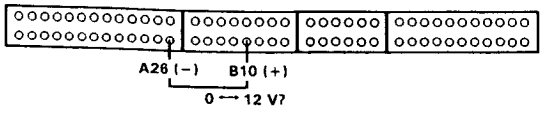

Block the right front wheel and slowly rotate left front wheel and measure voltage between B10 (+) terminal and A26 (−) terminal.

Does voltage pulse 0 V and 12 V?

NO → Turn the ignition switch OFF.

(To page 11-77)

YES

Substitute a known-good ECM and recheck. If symptom/indication goes away, replace the original ECM.

(From page 11-76)

Disconnect the B connector from the ECM only, not the main wire harness.

Turn the ignition switch ON.

Block the right front wheel and slowly rotate left front wheel and measure voltage between B10 (+) terminal and A26 (−) terminal.

Does voltage pulse 0 V and 12 V?

NO →
- **Repair short in ORN wire between ECM (B10) and the VSS, speedometer, TCM integrated control unit or cruise control unit.**
- **Repair open in ORN wire between ECM (B10) and VSS.**
- **If wire is OK, test the VSS.**

YES

Substitute a known-good ECM and recheck. If symptom/indication goes away, replace the original ECM.

Troubleshooting Flowchart — Ignition Timing Adjuster

The Malfunction Indicator Lamp (MIL) indicates Diagnostic Trouble Code (DTC) 18: A problem in the Ignition Timing Adjuster circuit.

The ignition timing adjuster allows the electronic ignition advance to be set to 15° BTDC at idle.

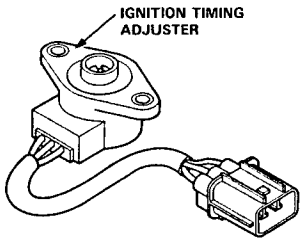

18

- **The MIL has been reported on.**
- **With service check connector jumped (see page 11-36), code 18 is indicated.**

Do the ECM Reset Procedure (see page 11-37).

Turn the ignition switch ON.

Is the MIL on and does it indicate code 18? — NO → **Intermittent failure, system is OK at this time (test drive may be necessary). Check for poor connections or loose wires at C328 (ignition timing adjuster) and ECM.**

YES

Turn the ignition switch OFF.

Disconnect the 3P connector from the control box.

Measure resistance between A terminal and C terminal on ignition timing adjuster.

Is there 3.5–6.5 kΩ? — NO → **Replace the ignition timing adjuster.**

YES

(To page 11-79)

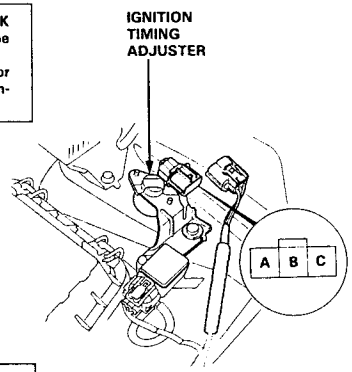

(From page 11-78)

Measure resistance between A and B terminals and between C and B terminals.

Does the sum of the two resistance checks equal 3.5–6.5 kΩ? — YES → **Replace the ignition timing adjuster.**

NO

Turn the ignition switch ON.

Measure voltage between YEL/WHT (+) terminal and GRN/WHT (−) terminal on the main wire harness.

Is there approx. 5 V? — YES → Measure voltage between YEL/WHT (+) terminal and body ground.

Is there approx. 5 V? — YES → **Repair open in GRN/WHT wire between ECM (D22) and ignition timing adjuster.**

NO

Turn the ignition switch OFF.

Connect the test harness between the ECM and connectors (see page 11-39).

Turn the ignition switch ON.

Measure voltage between D20 (+) terminal and D22 (−) terminal.

Is there approx. 5 V? — YES → **Repair open in YEL/WHT wire between ECM (D20) and ignition timing adjuster.**

NO

Substitute a known-good ECM and recheck. If prescribed voltage is now available, replace the original ECM.

NO

Turn the ignition switch OFF.

Reconnect 3P connector.

Connect the test harness between the ECM and connectors (see page 11-39).

Turn the ignition switch ON.

Measure voltage between D8 (+) terminal and D22 (−) terminal.

Is there 0.5–4.5 V? — NO → **Repair open or short in BRN wire between ECM (D8) and ignition timing adjuster.**

YES

Substitute a known-good ECM and recheck. If symptom/indication goes away, replace the original ECM.

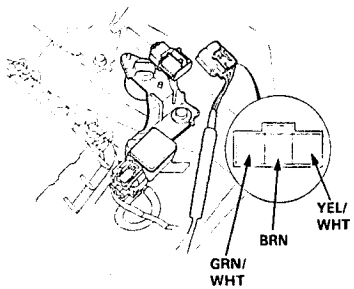

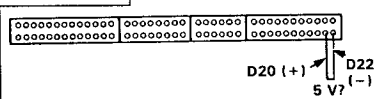

Troubleshooting Flowchart — Electrical Load Detector (ELD)

20 The Malfunction Indicator Lamp (MIL) indicates Diagnostic Trouble Code (DTC) 20: A problem in the Electrical Load Detector (ELD) circuit.

[illegible] check connector [illegible] page 11-36), code 20 is indicated.

[illegible] the ECM Reset Procedure (see page 11-37).

[illegible] engine and keep engine speed at idle. [illegible] headlights.

Does the MIL indicate code 20?
- NO → Intermittent failure, system is OK at this time (test drive may be necessary). Check for poor connections or loose wires at C218 (ELD) and ECM.
- YES ↓

Turn the ignition switch OFF.

Open the under-hood fuse/relay box lid.

Disconnect the 3P connector from the ELD.

Turn the ignition switch ON.

Measure voltage between BLK/YEL (+) terminal and BLK (−) terminal.

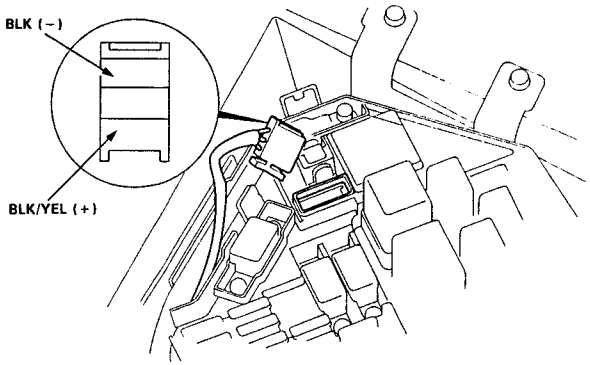

Is there battery voltage?
- NO → Measure voltage between BLK/YEL (+) terminal and body ground.
  - Is there battery voltage?
    - YES → Repair open in BLK wire between the 3P connector and G201 (located at right side of engine compartment).
    - NO → Repair open in BLK/YEL wire between No. 2 ECU (ECM) (15 A) fuse in the under-dash fuse/relay box and the 3P connector.
- YES ↓

(To page 11-81)

(From page 11-80)

Measure voltage between GRN/RED terminal and body ground.

Is there 4.5–5.0 V?
- NO → Repair open or short in GRN/RED wire between ECM (D10) and the 3P connector. If wire is OK, substitute a known-good ECM and recheck.
- YES ↓

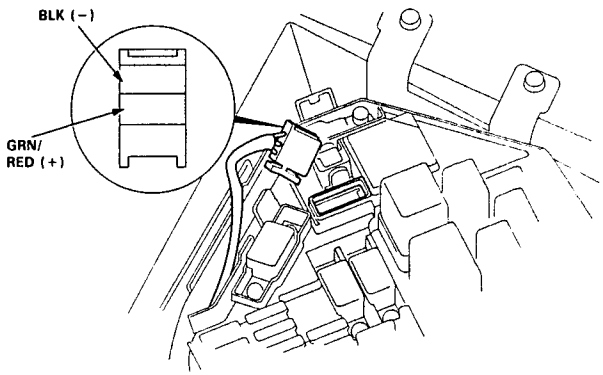

Turn the ignition switch OFF.

Connect the 3P connector to the ELD.

Connect the test harness between the ECM and connectors (see page 11-39).

(To page 11-82)

(cont'd)

Troubleshooting Flowchart — Electrical Load Detector (ELD) (cont'd)

(From page 11-81)

Start the engine and allow it to idle.

Under the conditions listed in the chart to the right, measure voltage between D10 (+) terminal and A26 (−) terminal.

Condition	Voltage
Headlight switch, first position (•)	1.8–2.8 V
Headlight switch, second position (●) (low)	0.8–1.8 V

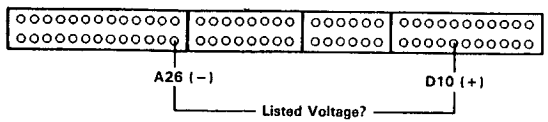

Is the voltage listed in the chart available?

NO → **Replace the ELD.**

YES → **Substitute a known-good ECM and recheck. If symptom/indication goes away, replace the original ECM.**

Troubleshooting Flowchart — Knock Sensor (KS)

23 — The Malfunction Indicator Lamp (MIL) indicates Diagnostic Trouble Code (DTC) 23: A problem in the front Knock Sensor (KS) circuit.

53 — The Malfunction Indicator Lamp (MIL) indicates Diagnostic Trouble Code (DTC) 53: A problem in the rear Knock Sensor (KS) circuit.

23 or 53

- The MIL has been reported on.
- With service check connector jumped (see page 11-36), code 23 and/or 53 are indicated.

Do the ECM Reset Procedure (see page 11-37).

Warm up the engine to normal operating temperature (the radiator fan comes on).

Hold engine at 3,000–4,000 rpm for 10 seconds in neutral. (A/T: Transmission in N or P position).

Is the MIL on and does it indicate code 23 and/or 53?

NO → Intermittent failure, system is OK at this time (test drive may be necessary). Check for poor connections or loose wires at C308 (located at left shock tower), C123, C119 (KS) and ECM.

YES

Turn the ignition switch OFF.

Connect the test harness to the main wire harness only, not to the ECM (see page 11-39).

Disconnect the C308 connector (located at left shock tower).

Check for continuity between C1 or C3* terminal and body ground.

Is there continuity?

YES → Repair short in ORN/WHT or RED/BLU* wire between ECM (C1 or C3*) and the KS.

NO

(To page 11-85)

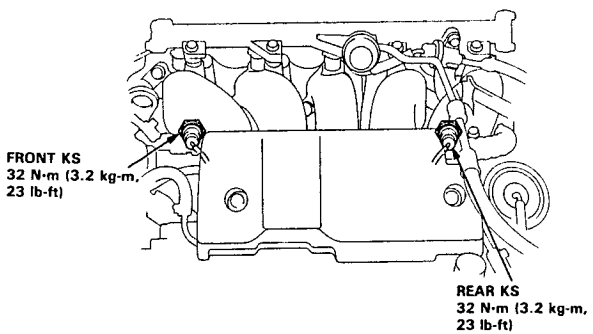

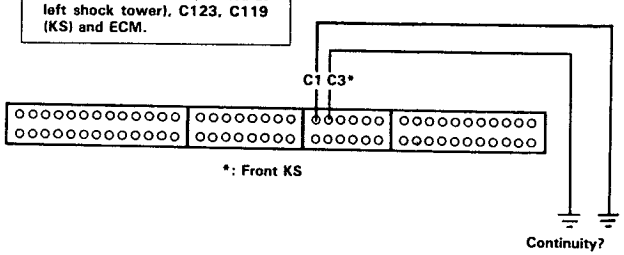

*: Front KS

(From page 11-84)

Check for continuity on ORN/WHT or RED/BLU* wire between C1 or C3* and C308 (14P) connector of main wire harness.

Is there continuity?

NO → Repair open in ORN/WHT or RED/BLU* wire between ECM (C1 or C3*) and the indicated KS.

YES

Substitute a known-good ECM and then hold the engine rpm at 3,000–4,000 rpm for 10 seconds in neutral (A/T: Transmission in N or P position) and recheck.

Is the MIL on and does it indicate code 23 and/or 53?

NO → Replace the original ECM.

YES

Replace the front and/or rear KS and recheck.

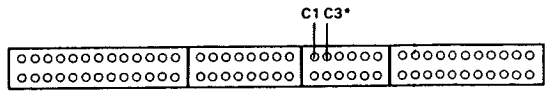

*: Front KS

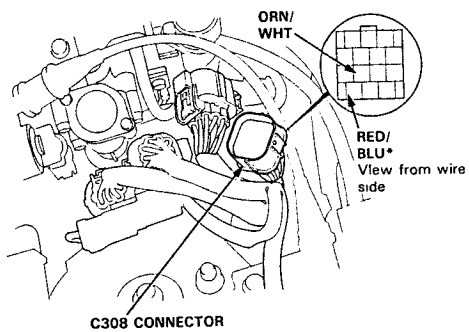

Troubleshooting Flowchart — A/T FI Signal A/B

30 The Malfunction Indicator Lamp (MIL) indicates Diagnostic Trouble Code (DTC) 30: A problem in the A/T FI signal A circuit between Transmission Control Module (TCM) and ECM.

31 The Malfunction Indicator Lamp (MIL) indicates Diagnostic Trouble Code (DTC) 31: A problem in the A/T FI signal B circuit between Transmission Control Module (TCM) and ECM.

30 or 31

With service check connector jumped (see page 11-36), code 30 and/or 31 are indicated.

Do the ECM Reset Procedure (see page 11-37).

Test drive necessary.
Drive the car for several miles so that the transmission upshifts and downshifts several times.

Does the MIL indicate code 30 and/or 31?

NO → **Intermittent failure, system is OK at this time.**
Check for poor connections or loose wires at C441 (TCM) and ECM.

YES

Turn the ignition switch OFF.

Connect the test harness to the main harness only, not to the ECM (see page 11-39).

Disconnect the 22P connector from the TCM.

Check for continuity between B3 or B4* terminal and body ground.

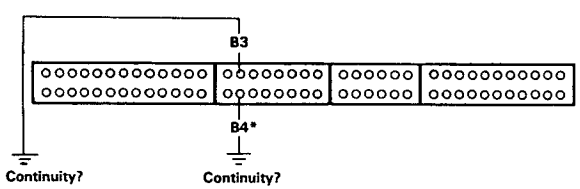

*: code 31 (A/T FI Signal B)

Is there continuity?

YES → **Repair short in WHT/GRN or WHT/RED* wire between ECM (B3 or B4*) and the TCM.**

NO

(To page 11-87)

(From page 11-86)

Check for continuity on WHT/GRN or WHT/RED* wire between B3 or B4* and 22P connector of the TCM.

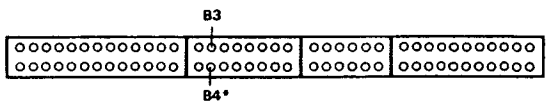

Does continuity exist?

NO → **Repair open in WHT/GRN or WHT/RED* wire between ECM (B3 or B4*) and the TCM.**

*: code 31 (A/T FI Signal B)

YES

Substitute a known-good ECM and recheck. If symptom/indication goes away, replace the original ECM.

Idle Control System

System Troubleshooting Guide

NOTE:

- Across each row in the chart, the sub-systems that could be sources of a symptom are ranked in the order they should be inspected, starting with ①. Find the symptom in the left column, read across to the most likely source, then refer to the page listed at the top of that column. If inspection shows the system is OK, try the next system ②, etc.
- If the idle speed is out of specification and the Malfunction Indicator Lamp (MIL) dose not blink Diagnostic Trouble Code (DTC) 14, go to inspection described on page 11-91.

PAGE / SUB-SYSTEM / SYMPTOM		IDLE ADJUSTING SCREW	IDLE AIR CONTROL VALVE	AIR CONDI-TIONING SIGNAL	ALTER-NATOR FR SIGNAL	AUTOMATIC TRANSAXLE GEAR POSITION SIGNAL	STARTER SWITCH SIGNAL	BRAKE SWITCH SIGNAL	POWER STEERING PRESSURE SWITCH	FAST IDLE THERMO VALVE	HOSES AND CONNEC-TIONS
		108	92	94	96	98	100	102	104	105	•
DIFFICULT TO START ENGINE WHEN COLD										①	
WHEN COLD FAST IDLE OUT OF SPEC (1,000–2,000 rpm)		③	②							①	
ROUGH IDLE			②								①
WHEN WARM RPM TOO HIGH		③	①						③	②	③
WHEN WARM RPM TOO LOW	Idle speed is below specified rpm (no load)	②	①								
	Idle speed does not increase after initial start up.		①								
	On models with automatic transmission, the idle speed drops in gear		②			①					
	Idle speeds drops when air conditioner in ON		②	①							
	Idle speed drops when steering wheel is turning		②						①		
	Idle speed fluctuates with electrical load		②		③						①
FREQUENT STALLING	WHILE WARMING UP	②	①								
	AFTER WARMING UP	①	②								
FAILS EMISSION TEST											①

System Description

The idle speed of the engine is controlled by the Idle Air Control (IAC) Valve.
The valve changes the amount of air bypassing into the intake manifold in response to electric current controlled by the ECM.
When the IAC Valve is activated, the valve opens to maintain the proper idle speed.

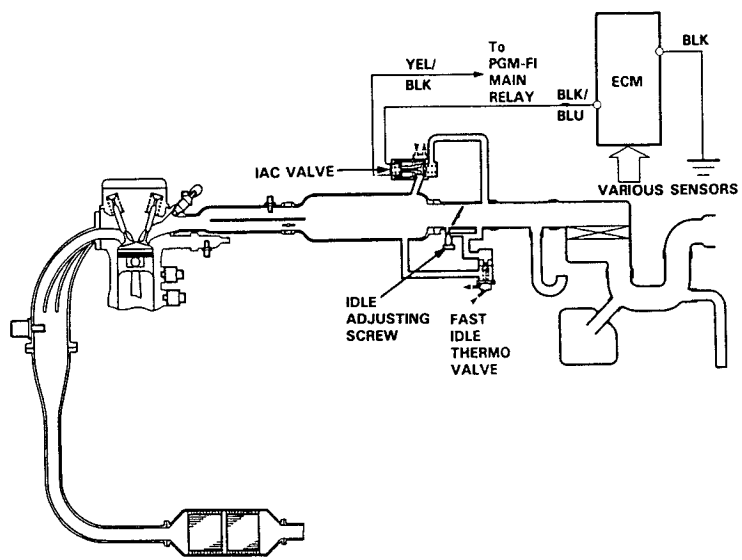

(cont'd)

Idle Control System

System Description (cont'd)

1. After the engine starts, the IAC valve opens for a certain time. The amount of air is increased to raise the idle speed about 150–300 rpm.

2. When the engine coolant temperature is low, the IAC valve is opened to obtain the proper fast idle speed. The amount of bypassed air is thus controlled in relation to the engine coolant temperature.

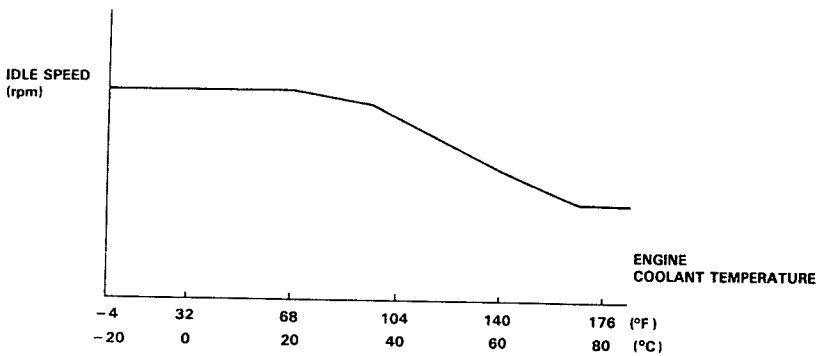

1. When the idle speed is out of specification and the Malfunction Indicator Lamp (MIL) does not blink Diagnostic Trouble Code (DTC) 14, check the following items:
   - Adjust the idle speed (page 11-106)
   - Air conditioning signal (page 11-94)
   - ALT FR signal (page 11-96)
   - A/T gear position signal (page 11-98)
   - Starter switch signal (page 11-100)
   - Brake switch signal (page 11-102)
   - PSP switch signal (page 11-104)
   - Fast idle thremo valve (page 11-105)
   - Hoses and connections
   - IAC valve and its mounting O-rings

2. If the above items are normal, substitute a known-good IAC valve and readjust the idle speed (page 11-106).

   - If the idle speed still connot be adjusted to specification (and the MIL does not blink code 14) after IAC valve replacement, substitute a known-good ECM and recheck. If symptom goes away, replace the original ECM.

Idle Control System

Troubleshooting Flowchart — Idle Air Control (IAC) Valve

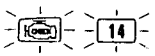

The Malfunction Indicator Lamp (MIL) indicates Diagnostic Trouble Code (DTC) 14: A problem in the Idle Air Control (IAC) Valve circuit.

The IAC Valve changes the amount of air bypassing the throttle body in response to a current signal from the ECM in order to maintain the proper idle speed.

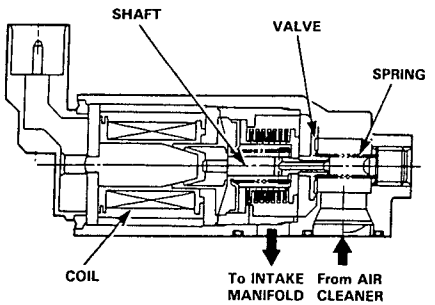

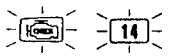

- The MIL has been reported on.
- With service check connector jumped (see page 11-36), code 14 is indicated.

Do the ECM Reset Procedure (see page 11-37).

Start the engine.

Is the MIL on and does it indicate code 14?

NO → With the engine running and the accelerator pedal released disconnect the 2P connector on the IAC valve.

Is there a reduction in engine rpm?

YES → Intermittent failure, system is OK at this time (test driving may be necessary). Check for poor connections or loose wires at C307 (located at left shock tower), C122 (IAC valve) and ECM.

NO → Substitute a known-good IAC valve and retest. If symptom goes away, replace the orignal IAC valve.

YES → Disconnect the 2P connector from the IAC valve.

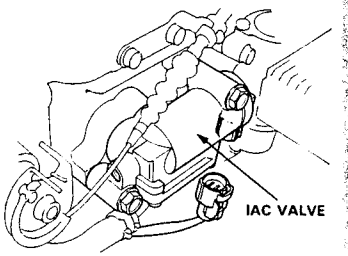

(To page 11-93)

(From page 11-92)

Measure voltage between the YEL/BLK wire and body ground.

Is there battery voltage?

NO → Repair open in YEL/BLK wire between the IAC valve and PGM-FI main relay.

YES → Turn the ignition switch off and reconnect the 2P connector to the IAC valve.

Connect the test harness "A" connector to the main wire harness only, not the ECM (see page 11-39).

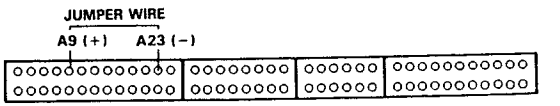

Turn the ignition switch ON.

Momentarily connect A9 (+) terminal to A23 (−) terminal several times.

Does the IAC valve click?

YES → Substitute a known-good ECM and retest. If symptom/indication goes away, replace the original ECM.

NO → Check for an open or short in BLK/BLU wire between IAC valve and ECM (A9). If the wire is OK, replace the IAC valve.

Idle Control System

Troubleshooting Flowchart — Air Conditioning Signal

This signals the ECM when there is a demand for cooling from the air conditioning system.

Inspection of Air Conditioning Signal.

Connect the test harness between the ECM and connectors. Disconnect "B" connector from the main wire harness only, not ECM (see page 11-39)

Turn the ignition switch ON.

Measure voltage between B5 (+) terminal and A26 (−) terminal.

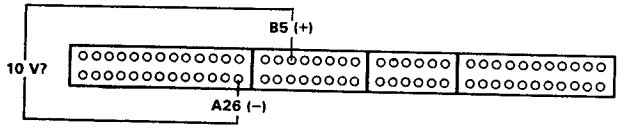

Is there approx. 10 V?

- NO → **Substitute a known-good ECM and recheck. If prescribed voltage is now available, replace the original ECM.**
- YES ↓

Reconnect "B" connector to the main wire harness.

Momentarily connect A15 terminal to A26 terminal several times.

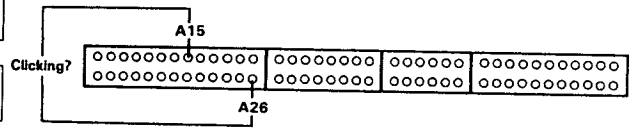

Is there a clicking noise from the A/C compressor clutch?

- NO → Connect the RED/BLU terminal of the 4P connector on the A/C clutch relay to body ground.

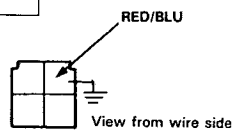

Is there a clicking noise from the A/C compressor clutch?

- NO → **See air conditioner inspection (see section 22).**
- YES → **Repair open in RED/BLU wire between ECM (A 15) and A/C clutch relay.**

- YES ↓

Start the engine.

Blower switch ON.

(To page 11-95)

(From page 11-94)

A/C switch ON.

Does A/C operate ?

- NO → Measure voltage between B5 (+) terminal and A26 (−) terminal.

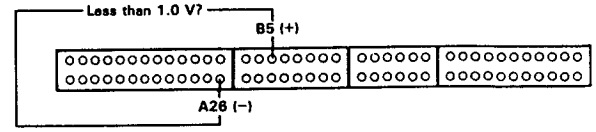

Is voltage less than 1.0 V?

- NO → **Repair open in BLU/BLK wire between ECM (B5) and A/C pressure switch.**
- YES → **Substitute a known-good ECM and recheck. If prescribed voltage is now abailable, replace the original ECM.**

- YES ↓

Air conditioning signal is OK.

Idle Control System

Troubleshooting Flowchart — Alternator (ALT) FR Signal

This signals the ECM when the Alternator (ALT) is charging.

Inspection of ALT FR signal.

Connect the test harness between the ECM and connectors. Disconnect "D" connector from the main wire harness only, not the ECM (see page 11-39).

Turn the ignition switch ON

Measure voltage between D9 (+) terminal and A26 (−) terminal.

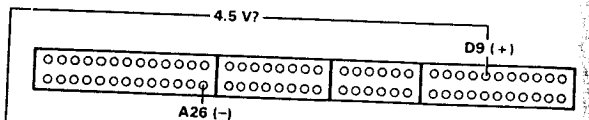

Is there approx. 4.5 V?

NO → **Substitute a known-good ECM and recheck. If prescribed voltage is now available, replace the original ECM.**

YES

Turn the ignition switch OFF.

Reconnect "D" connector to the main wire harness.

Warm up engine to normal operating temperature (the radiator fan comes on).

Measure voltage between D9 (+) terminal and A26 (−) terminal.

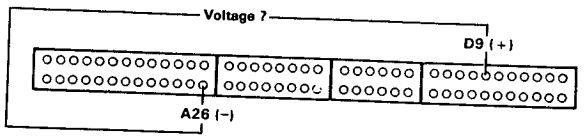

Does the voltage decrease when headlights and rear defogger are turned on ?

NO → Turn the ignition switch OFF.

YES

Do the ECM Reset Procedure (see page 11-37).

ALT FR signal is OK.

(To page 11-97)

(From page 11-96)

Disconnect "D" connector from ECM only, not the main wire harness.

NOTE: The radio has a coded theft protection circuit. Be sure you get the customer's code number before disconnecting the battery cable.

Disconnect the negative battery cable from the battery.

Check for continuity between D9 terminal and body ground.

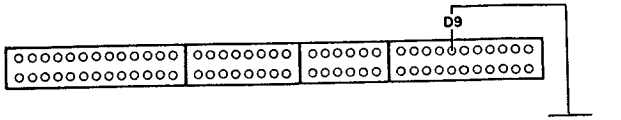

Is there continuity?

YES → Disconnect GRN connector from the ALT.

NO → Disconnect GRN connector from the ALT.

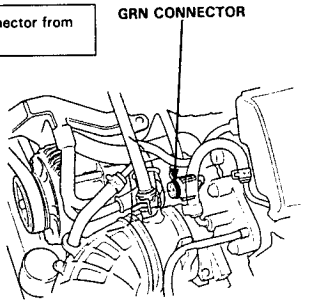

Connect WHT/RED wire to body ground.

Check for continuity between D9 terminal and body ground.

Is there continuity?

YES → **Repair open in WHT/RED wire between ECM (D9) and ALT.**

NO → **See ALT inspection (see section 23)**

Check for continuity between D9 terminal and body ground.

Is there continuity?

NO → **See ALT inspection (see section 23).**

YES → **Repair short in WHT/RED wire between ECM (D9) and ALT.**

Idle Control System

Troubleshooting Flowchart — Automatic Transaxle (A/T) Gear Position Signal

This signals the ECM when the transmission is in [N] or [P] position.

Inspection of A/T Gear Position Signal.

Turn the ignition switch ON.

Observe the A/T gear position indicator and select each position separately.

Does the indicator light properly?

- NO → **See A/T gear position indicator inspection (see section 14).**
- YES ↓

Turn the ignition switch OFF.

Connect the test harness between the ECM and connectors. Disconnect "B" connector from the main wire harness only, not the ECM (see page 11-39)

Turn the ignition switch ON.

Measure voltage between B7 (+) terminal and A26 (−) terminal.

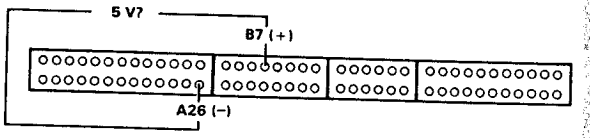

Is there approx. 5 V?

- NO → **Substitute a known-good ECM and recheck. If prescribed voltage is now available, replace the original ECM.**
- YES ↓

Turn the ignition switch OFF.

Reconnect "B" connector to the main wire harness.

Start the engine.

(To page 11-99)

(From page 11-98)

Measure voltage between B7 (+) terminal and A26 (−) terminal with the transmission in [N] and [P] position individualy.

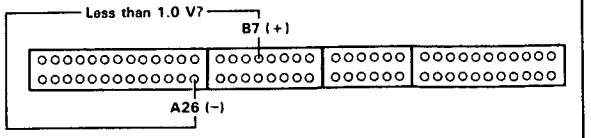

Is there less than 1.0 V?

- NO → **Repair open in YEL/GRN wire between ECM (B7) and gauge assembly.**
- YES ↓

Measure voltage between B7 (+) terminal and A26 (−) terminal with the transmission in gear.

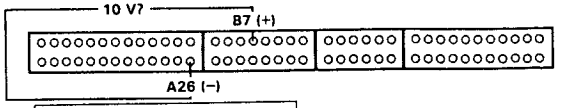

Is there approx. 10 V?

- NO → **Repair short in YEL/GRN wire between ECM (B7) and gauge assembly.**
- YES ↓

A/T gear position signal is OK.

Idle Control System

Troubleshooting Flowchart — Starter Switch Signal

This signals the ECM when the engine is cranking.

Inspection of Starter Switch Signal.

Connect the test harness between the ECM and connectors (see page 11-39).

Measure voltage between B9 (+) terminal and A26 (−) terminal when the ignition switch in the start position.

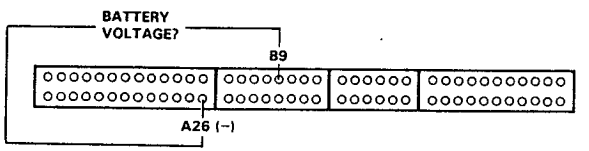

NOTE:
- M/T: Clutch pedal must be depressed.
- A/T: Transmission in [N] or [P] position.

Is there battery voltage ?

NO → Inspect No. 9 STARTER SIGNAL (7.5 A) fues in the under-dash fuse/relay box.

Is the fuse OK?

NO → **Replace the fuse.**

YES → **Repair open in BLU/RED wire between ECM (B9) and No. 9 STARTER SIGNAL (7.5 A) FUSE.**

YES → **Starter switch signal is OK.**

Idle Control System

Troubleshooting Flowchart — Brake Switch Signal

This signals the ECM when the brake pedal is depressed.

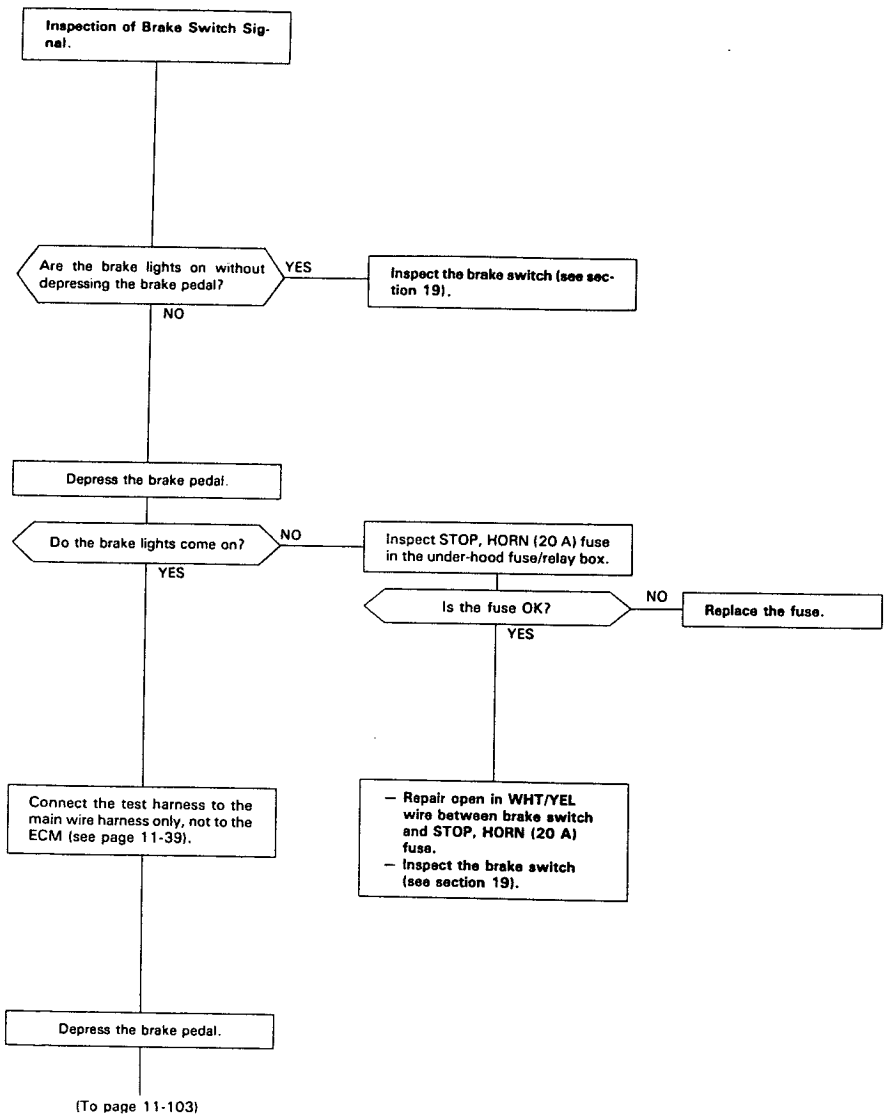

(To page 11-103)

(From page 11-102)

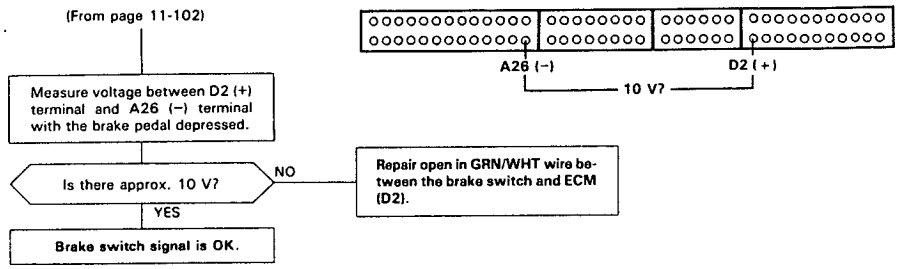

Idle Control System

Troubleshooting Flowchart — Power Steering Pressure (PSP) switch Signal

This signals the ECM when the power steering load is high.

Inspection of PSP switch Signal

Connect the test harness between the ECM and connectors (see page 11-39).

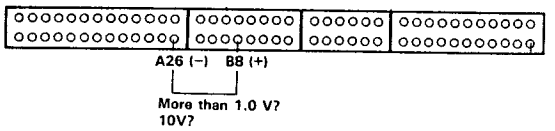

Turn the ignition switch ON.

Measure voltage between B8 (+) terminal and A26 (−) terminal.

Is there more than 1.0 V?

- YES → Disconnect the 2P connector from the PSP switch. → Connect RED terminal to BLK terminal. → Is there more than 1.0 V?
  - NO → Replace the PSP switch.
  - YES → Repair open in RED wire between ECM (B8) and PSP switch or BLK wire between PSP switch and G302 (located at left side of engine compartment).
- NO → Start the engine.

Turn steering wheen slowly.

Measure voltage between B8 (+) terminal and A26 (−) terminal while steering wheel is turning.

Is there approx. 10 V?

- NO → Turn the ignition switch OFF. → Disconnect "B" connector from main wire harness only, not the ECM. → Thurn the ignition switch ON. → Is there approx. 10 V?
  - NO → Substitute a known-good ECM and recheck. If precribed voltage is now available, replace the original ECM.
  - YES → Turn the ignition switch OFF. → Reconnect "B" connector to main wire harness and disconnect 2P connector on the PSP switch. → Turn the ignition switch ON. → Is there approx. 10 V?
    - YES → Replace the PSP switch.
    - NO → Repair short in RED wire between ECM (B8) and PSP switch.
- YES → PSP switch signal is OK.

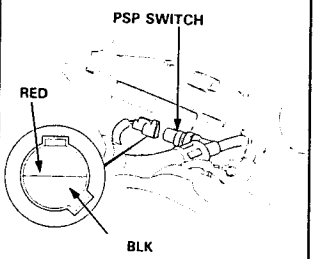

Fast Idle Thermo Valve

Description

To prevent erratic running when the engine is warming up, it is necessary to raise the idle speed. The fast idle thermo valve is controlled by a thermowax plunger. When the engine is cold, the engine coolant surrounding the thermowax contracts the plunger, allowing additional air to be bypassed into the intake manifold so that the engine idles faster. When the engine reaches operating temperature, the valve closes, reducing the amount of air by passing into the manifold.

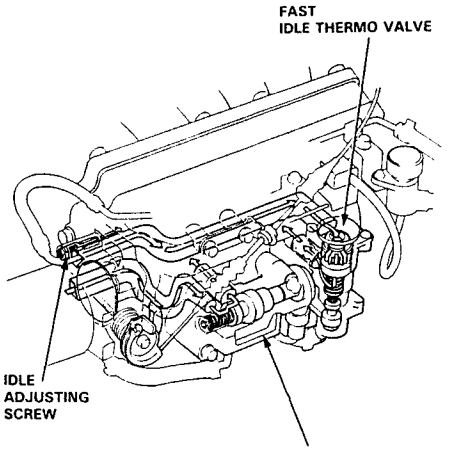

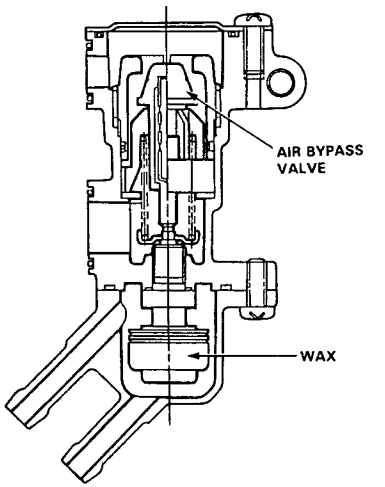

Inspection

NOTE: The fast idle thermo valve is factory adjusted; it should not be disassembled.

1. Remove the cove of the fast idle thermo valve.
2. Start the engine.
3. Put your finger on the valve seat area and make sure that there is air flow with the engine cold (engine coolant temperature below 86°F, 30°C) and idling.

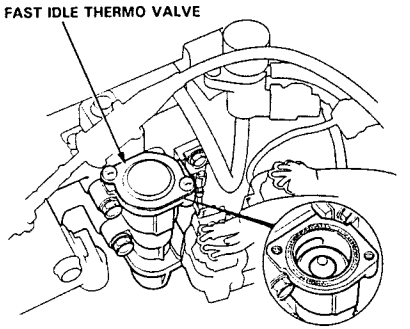

- If not, replace the fast idle thermo valve and retest.

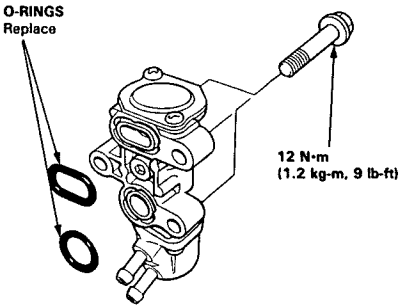

4. Warm up the engine (the radiator fan comes on).
5. Check that the valve is completely closed. If not, air suction can be felt in the valve seat area.
   - If any suction is felt, the valve is leaking. Check engine coolant level and for air in the engine cooling system (see section 10). If OK, replace the fast idle thermo valve and recheck.

Idle Speed Setting

Inspection/Adjustment

NOTE: (Canada) Pull the parking brake lever up. Start the engine, then check that the headlights are off.

1. Start the engine and warm it up to normal operating temperature (the radiator fan comes on).
2. Connect a tachometer.
3. Disconnect the 2P connector from the Idle Air Control (IAC) valve.

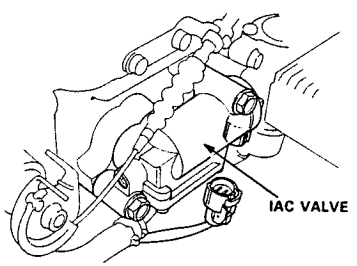

4. Start the engine with the accelerator pedal slightly depressed. Stabilize the rpm at 1000, then slowly release the pedal until the engine idles.
5. Check idling in no-load conditions: headlights, blower fan, rear defogger, cooling fan, and air conditioner are not operating.

Idle speed should be:

M/T	550 ± 50 rpm
A/T	550 ± 50 rpm (in N or P position)

Adjust the idle speed, if necessary, by turning the idle adjusting screw.

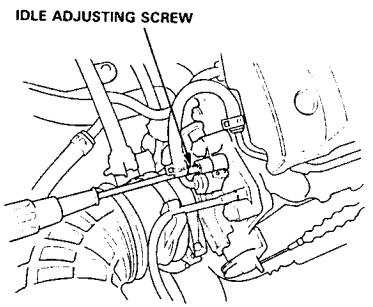

6. Turn the ignition switch OFF.
7. Reconnect the 2P connector on the IAC valve, then remove BACK UP (10 A) fuse in the under-hood fuse/relay box for 10 seconds to reset the ECM.
8. Restart and idle the engine with no-load conditions for one minute, then check the idle speed.

   NOTE: (Canada) Pull the parking brake lever up. Start the engine, then check that the headlights are off.

   Idle speed should be:

M/T	700 ± 50 rpm
A/T	700 ± 50 rpm (in N or P position)

9. Idle the engine for one minute with headlights (Hi) and rear defogger ON and check the idle speed.

   Idle speed should be:

M/T	770 ± 50 rpm
A/T	770 ± 50 rpm (in N or P position)

10. Turn the headlights and rear defogger off. Idle the engine for one minute with blower fan switch at HI and air conditioner on, then check the idle speed.

    Idle speed should be:

M/T	770 ± 50 rpm
A/T	770 ± 50 rpm (in N or P position)

NOTE: If the idle speed is not within specification, see System Troubleshooting Guide on page 11-88.

Fuel Supply System

System Troubleshooting Guide

NOTE: Across each row in the chart, the sub-systems that could be sources of a symptom are ranked in the order they should be inspected starting with ①. Find the symptom in the left column, read across to the most likely source, then refer to the page listed at the top of that column. If inspection shows the system is OK, try the next most likely system ②, etc.

PAGE / SUB-SYSTEM / SYMPTOM		FUEL INJECTOR	FUEL PRESSURE REGULATOR	FUEL FILTER	FUEL PUMP	PGM-FI MAIN RELAY	CONTAMI-NATED FUEL
		110	116	117	118	120	•
ENGINE WON'T START				③	①	②	
DIFFICULT TO START ENGINE WHEN COLD OR HOT				①			
ROUGH IDLE		①					②
POOR PERFORMANCE	MISFIRE OR ROUGH RUNNING	①	③				②
	FAILS EMISSION TEST	②	①				
	LOSS OF POWER	③		②	①		
FREQUENT STALLING	WHILE WARMING UP		①				
	AFTER WARMING UP		①				

Fuel Supply System

System Description

The fuel supply system consists of a fuel tank, in-tank high pressure fuel pump, PGM-FI main relay, fuel filter, fuel pressure regulator, fuel injectors, injector resistor, and fuel hoses and pipes.
This system delivers pressure-regulated fuel to the fuel injectors and cuts the fuel delivery when the engine is not running.

Fuel Pressure

Relieving

⚠ WARNING

- **Do not smoke while working on the fuel system. Keep open flames or sparks away from your work area.**
- **Be sure to relieve fuel pressure while the engine is off.**

NOTE: Before disconnecting fuel pipes or hoses, release pressure from the system by loosening the 6 mm service bolt on top of the fuel filter.

1. Disconnect the battery negative cable from the battery negative terminal.

   NOTE: The radio has a coded theft protection circuit. Be sure you get the customer's code number before disconnecting the battery cable.

2. Remove fuel fill cap.
3. Use a box end wrench on the 6 mm service bolt at the fuel filter, while holding the special banjo bolt with another wrench.
4. Place a rag or shop towel over the 6 mm service bolt.
5. Slowly loosen the 6 mm service bolt one complete turn.

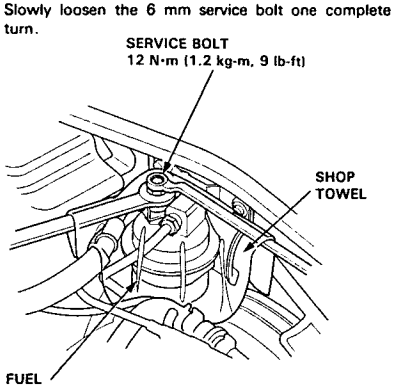

NOTE:
- A fuel pressure gauge can be attached at the 6 mm service bolt hole.
- Always replace the washer between the service bolt and the special banjo bolt, whenever the service bolt is loosened.
- Replace all washers whenever the bolts are removed.

Inspection

1. Relieve fuel pressure (see page 11-108).
2. Remove the service bolt on the fuel filter while holding the banjo bolt with another wrench. Attach the fuel pressure gauge.
3. Start the engine. *Measure the fuel pressure with the engine idling and vacuum hose of the fuel pressure regulator disconnected from the intake manifold and pinched.

   Pressure should be:
   300–350 kPa (3.0–3.5 kg/cm², 43–50 psi)

4. Reconnect #7 vacuum hose to the intake manifold.

   Pressure should be:
   235–285 kPa (2.35–2.85 kg/cm², 33–41 psi)

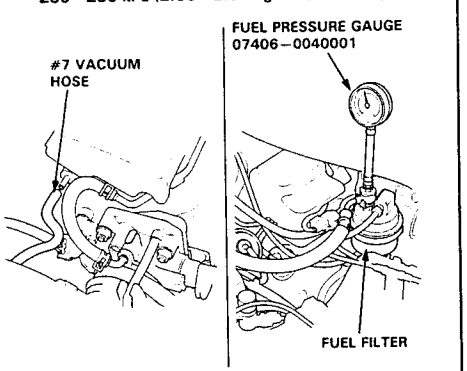

*: If the engine will not start turn the ignition switch on, wait for two seconds, turn it off then back on again and read the fuel pressure.

- If the fuel pressure is not as specified, first check the fuel pump (see page 11-119). If the fuel pump is OK, check the following:

– If the fuel pressure is higher than specified, inspect for:
  - Pinched or clogged fuel return hose or piping.
  - Faulty fuel pressure regulator (page 11-116).

– If the pressure is lower than specified, inspect for:
  - Clogged fuel filter.
  - Faulty fuel pressure regulator (page 11-116).
  - Leakage in the fuel hoses or pipes.

Fuel Supply System

Fuel Injectors

16 The Malfunction Indicator Lamp (MIL) indicates Diagnostic Trouble Code (DTC) 16: A problem in the Fuel Injector circuit.

The Fuel Injectors are a solenoid-actuated constant-stroke pintle type consisting of a solenoid, plunger needle valve and housing. When current is applied to the solenoid coil, the valve lifts up and pressurized fuel is injected. Because the needle valve lift and the fuel pressure are constant, the injection quantity is determined by the length of time that the valve is open (i.e., the duration the current is supplied to the solenoid coil). The Fuel Injector is sealed by an O-ring and seal ring at the top and bottom. These seals also reduce operating noise.

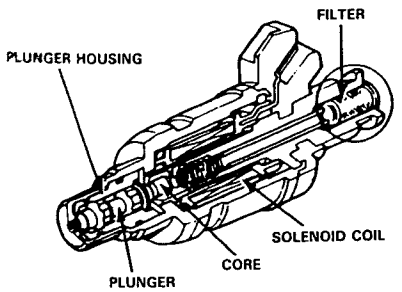

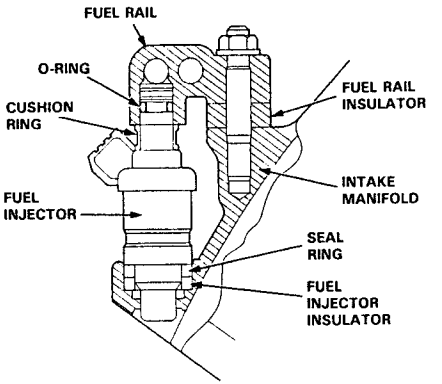

16

- The MIL has been reported on.
- With service check connector jumped (see page 11-36), code 16 is indicated.

Do the ECM Reset Procedure (see page 11-37).

Start the engine and allow it to idle.

NOTE: If engine will not start, it may take 10 seconds of cranking to set the code.

Is the MIL on and does it indicate code 16?

NO → **Intermittent failure, system is OK at this time (test drive may be necessary). Check for poor connections or loose wires at C307 (located at left shock tower), C420 (PGM-FI main relay), C111, C112, C113, C114, C115 (fuel injectors), C104 (injector resistor) and ECM.**

YES

(To page 11-111)

(From page 11-110)

Start engine and listen at each fuel injector for a clicking sound.

Turn the ignition switch OFF.

Disconnect the 2P connector from the fuel injector that does not click.

Measure resistance between the 2 terminals of fuel injector.

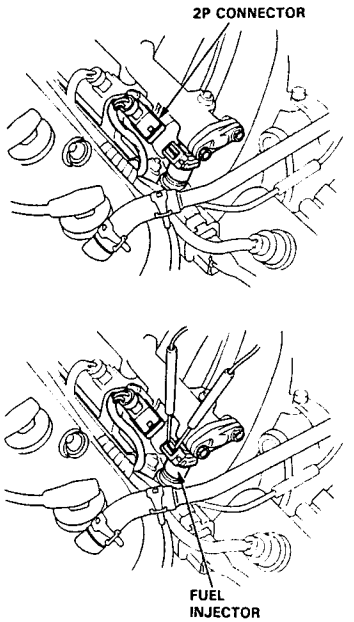

Is there 1.5–2.5 Ω?

NO → **Replace the fuel injector/injectors that are not 1.5–2.5 Ω.**

YES

Turn the ignition switch ON.

Measure voltage between RED/BLK (+) terminal in the 2P connector and body ground.

Is there battery voltage?

NO → Turn the ignition switch OFF.

Disconnect 6P connector on the injector resistor.

Turn the ignition switch ON.

Measure voltage between YEL/BLK (+) terminal and body ground.

(To page 11-112)

YES

(To page 11-112)

(cont'd)

Fuel Injectors (cont'd)

(From page 11-111)

Turn the ignition switch OFF.

Reconnect the 2P connector to the fuel injector.

Connect the test harness between the ECM and connector (see page 11-39).

Turn the ignition switch ON.

Measure voltage between A23 (−) terminal and following terminal:
- No. 1 fuel injector: A1 (+) terminal.
- No. 2 fuel injector: A3 (+) terminal.
- No. 3 fuel injector: A5 (+) terminal.
- No. 4 fuel injector: A2 (+) terminal.
- No. 5 fuel injector: A4 (+) terminal.

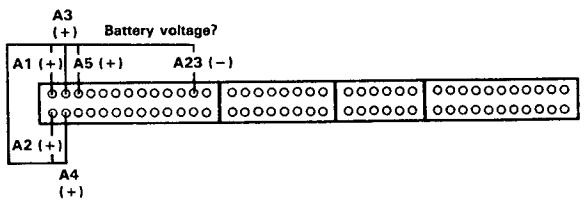

Is there battery voltage?

NO → **Repair open in the wire between the ECM (A1, A3, A5, A2 or A4) and the fuel injectors.**

YES → **Substitute a known-good ECM and recheck. If symptom /indication goes away, replace the original ECM.**

(From page 11-111)

Is there battery voltage?

NO → **Repair open in the YEL/BLK wire between the injector resistor and the PGM-FI main relay.**

YES → Test the injector resistor (see page 11-115).

Does the injector resistor test OK?

NO → **Replace the injector resistor.**

YES → **Repair open RED/BLK wire between 2P fuel injector connector and injector resistor.**

Replacement

WARNING **Do not smoke when working on the fuel system. Keep open flames away from your work area.**

1. Relieve fuel pressure (see page 11-108).
2. Remove the engine harness cover.
3. Disconnect the connectors from the fuel injectors.
4. Disconnect the #7 vacuum hose and fuel return hose from the fuel pressure regulator.

   NOTE: Place a rag or shop towel over the hoses before disconnecting them.
5. Disconnect the fuel hose from the fuel rail.
6. Loosen the retainer nuts on the fuel rail and harness holder.
7. Disconnect the fuel rail.
8. Remove the fuel injectors from the intake manifold.

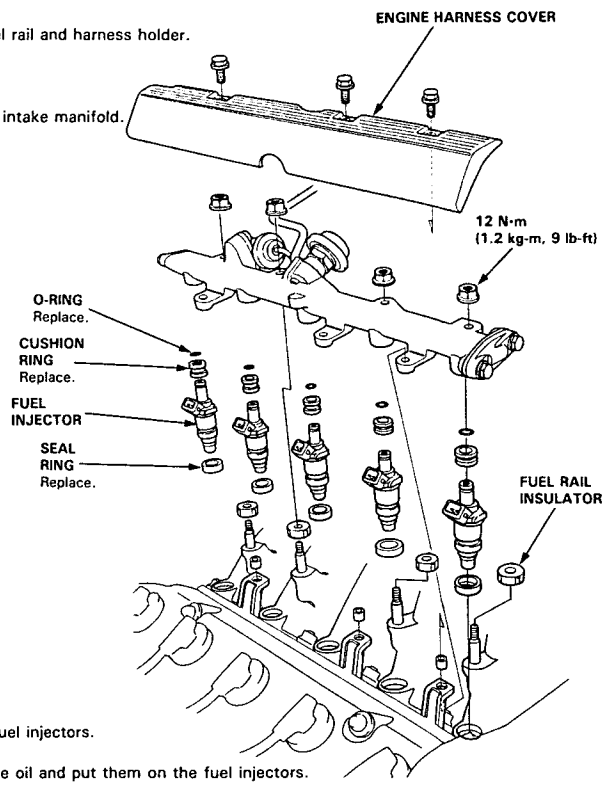

9. Slide new cushion rings onto the fuel injectors.
10. Coat new O-rings with clean engine oil and put them on the fuel injectors.
11. Insert the fuel injectors into the fuel rail first.
12. Coat new seal rings with clean engine oil and press them into the intake manifold.

(cont'd)

Fuel Injectors (cont'd)

13. Install the fuel injectors and fuel rail assembly in the manifold.

CAUTION: To prevent damage to the O-rings, install the fuel injectors in the fuel rail first, then install them in the intake manifold.

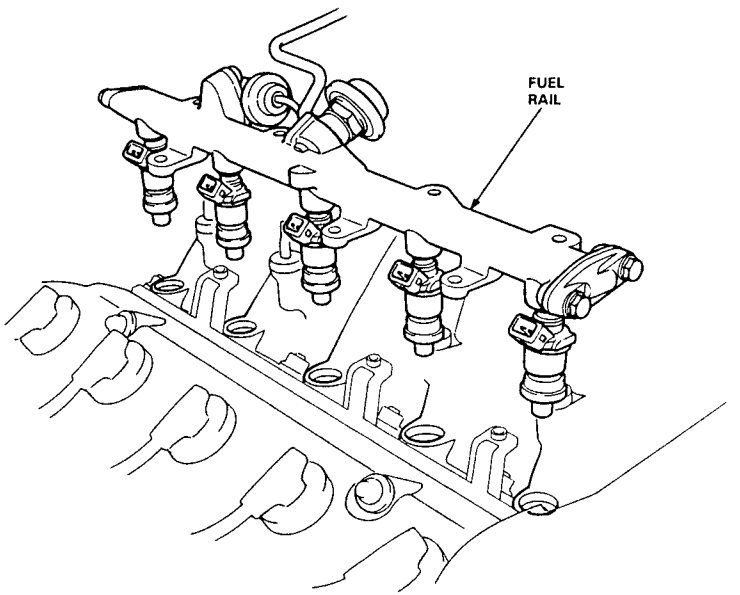

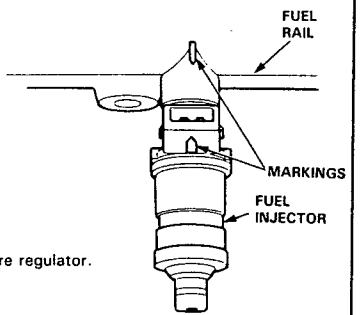

14. Align the center line on the connector with the mark on the fuel rail.
15. Install and tighten the retainer nuts.
16. Connect the fuel hose to the fuel rail with new washers.
17. Connect the #7 vacuum hose and fuel return hose to the fuel pressure regulator.
18. Install the connectors on the fuel injectors.
19. Install the engine harness cover.
20. Turn the ignition switch ON, but do not operate the starter. After the fuel pump runs for approximately two seconds, the fuel pressure in the fuel line rises. Repeat this two or three times, then check whether there is any fuel leakage.

Injector Resistor

Description

The resistor lowers the current supplied to the fuel injectors to prevent damage to the fuel injector coils. This allows a faster response time of the fuel injectors.

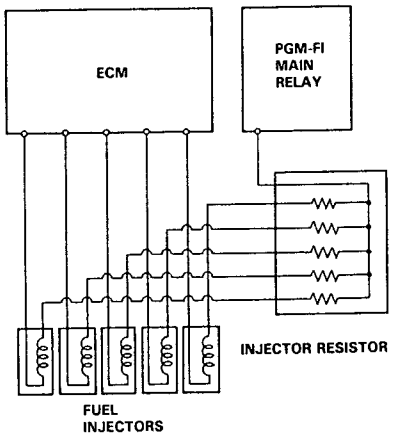

Testing

1. Disconnect the injector resistor connector.
2. Check for resistance between each of the injector resistor terminals (B, C, D, E and F) and the power terminal (A).

Resistance should be: 5—7 Ω

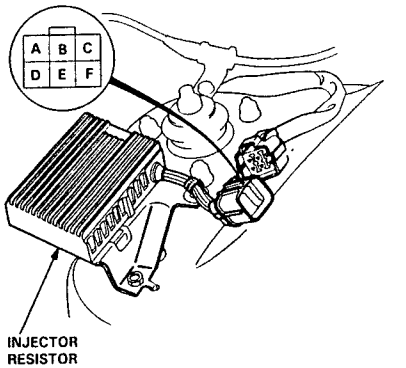

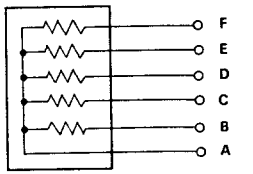

- Replace the injector resistor with a new one if any of the resistance are outside of the specification.

Fuel Supply System

Fuel Pressure Regulator

Description

The fuel pressure regulator maintains a constant fuel pressure to the fuel injectors. When the difference between the fuel pressure and manifold pressure exceeds (255 kPa, 2.55 kg/cm², 36 psi), the diaphragm is pushed upward, and the excess fuel is fed back into the fuel tank through the return line.

CLOSED:

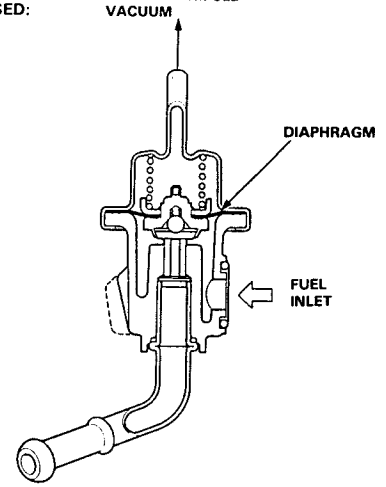

OPEN:

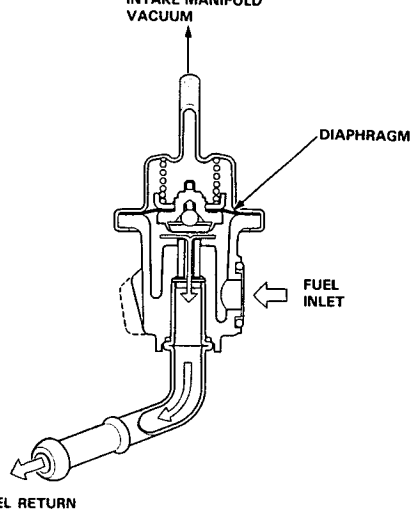

Testing

⚠WARNING Do not smoke during the test. Keep open flames away from your work area.

1. Attach a fuel pressure gauge to the service port of the fuel filter (see page 11-109).

   Pressure should be:
   300–350 kPa (3.0–3.5 kg/cm², 43–50 psi)
   (with the fuel pressure regulator vacuum hose disconnected and pinched)

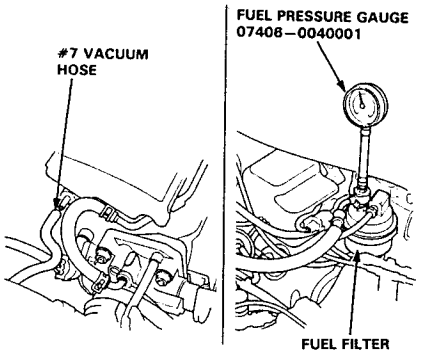

2. Reconnect the #7 vacuum hose to the intake manifold.

3. Check that the fuel pressure rises when the vacuum hose from the fuel pressure regulator is disconnected again.

   If the fuel pressure still did not rise, replace the fuel pressure regulator.

Replacement

⚠WARNING Do not smoke while working on fuel system. Keep open flame away from your work area.

1. Place a shop towel under the fuel pressure regulator, then relieve fuel pressure (see page 11-108).

2. Disconnect the vacuum hose and fuel return hose

3. Remove the two 6 mm retainer bolts.

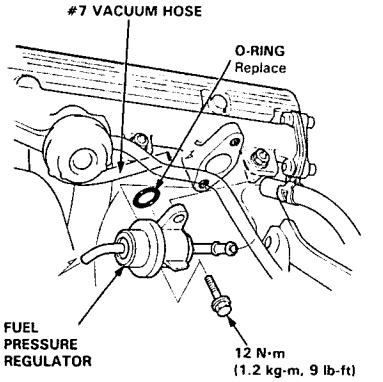

NOTE:
- Replace the O-ring.
- When assembling the fuel pressure regulator, apply clean engine oil to the O-ring and assemble it into its proper position, taking care not to damage the O-ring.

Fuel Filter

Replacement

⚠WARNING
- **Do not smoke while working on fuel system. Keep open flame away from your work area.**
- **While replacing the fuel filter, be careful to keep a safe distance between battery terminals and any tools.**

The fuel filter should be replaced every 4 years or 60,000 miles (96,000 km), whichever comes first or whenever the fuel pressure drops below the specified value (300–350 kPa, 3.0–3.5 kg/cm², 43–50 psi with the fuel pressure regulator vacuum hose disconnected and pinched) after making sure that the fuel pump and the fuel pressure regulator are OK.

1. Place a shop towel under and around the fuel filter.

2. Relieve fuel pressure (see page 11-108).

3. Remove the 12 mm banjo bolt and the fuel feed pipe from the fuel filter.

4. Remove the fuel filter clamp and fuel filter.

5. When assembling, use new washers, as shown.

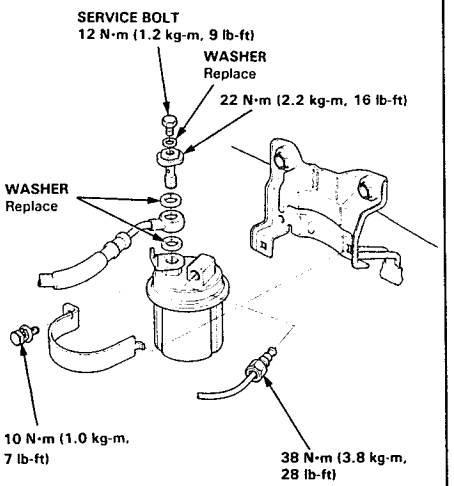

NOTE: Clean the flared joint of high pressure hoses thoroughly before reconnecting them.

Fuel Supply System

Fuel Pump

Description
Because of its compact impeller design, the fuel pump is installed inside the fuel tank, thereby saving space and simplifying the fuel line system.

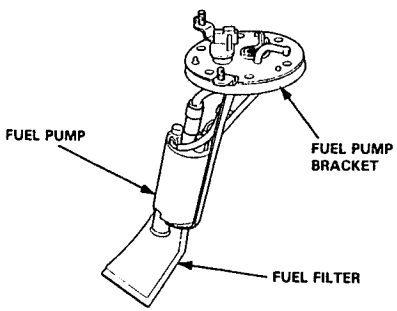

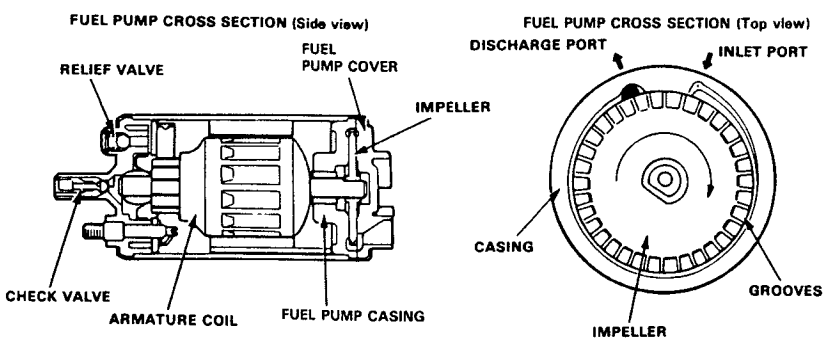

The fuel pump is comprised of a DC motor, a circumference flow pump, a relief valve for protecting the fuel line systems, a check valve for retaining residual pressure, an inlet port, and a discharge port. The fuel pump assembly consists of the impeller (driven by the motor), the fuel pump casing (which forms the pumping chamber), and the pump cover.

OPERATION
(1) When the engine is started, the PGM-FI main relay actuates the fuel pump, and the motor turns the impeler. Differential pressure is generated by the numerous grooves around the impeller.
(2) Fuel entering the inlet port flows inside the motor from the pumping chamber and is forced through the discharge port via the check valve. If fuel flow is obstructed at the discharge side of the fuel line, the relief valve will open to bypass the fuel to the inlet port an prevent excessive fuel pressure.
(3) When the engine stops, the fuel pump stops automatically. However, a check valve closes by spring action to retain the residual pressure in the line, helping the engine to restart more easily.

Testing

WARNING **Do not smoke during the test. Keep open flame away from your work area.**

If you suspect a problem with the fuel pump, check that the fuel pump actually runs; when it is ON, you will hear some noise if you hold your ear near the fuel fill port with the fuel fill cap removed. The fuel pump should run for two seconds when the ignition switch is first turned on. If there is no noise at the fuel fill port, check as follows:

1. Remove the trunk floor (see section 20).
2. Disconnect the 4P connector.

   CAUTION: Be sure to turn the ignition switch OFF before disconnecting the wires.

3. Disconnect the PGM-FI main relay connector and connect the BLK/YEL ⑤ wire and YEL ⑦ wire with a jumper wire.

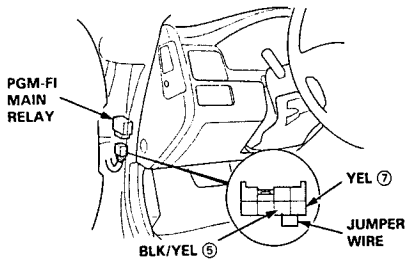

4. Check that battery voltage is available at the fuel pump connector when the ignition switch is turned ON (positive probe to the YEL wire, negative probe to the BLK wire).

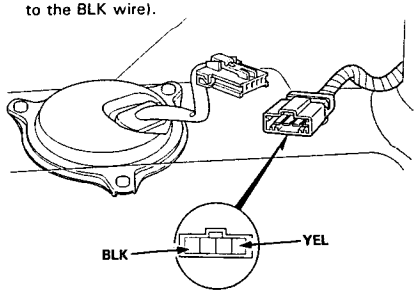

- If battery voltage is available, replace the fuel pump.
- If there is no voltage, check the fuel pump ground and wire harness (see page 11-122).

Replacement

WARNING **Do not smoke while working on fuel system. Keep open flames away from your work area.**

1. Remove the fuel tank (see page 11-124).
2. Disconnect the connector from the fuel pump.
3. Remove the fuel pump mounting nuts.
4. Remove the fuel pump from the fuel tank.

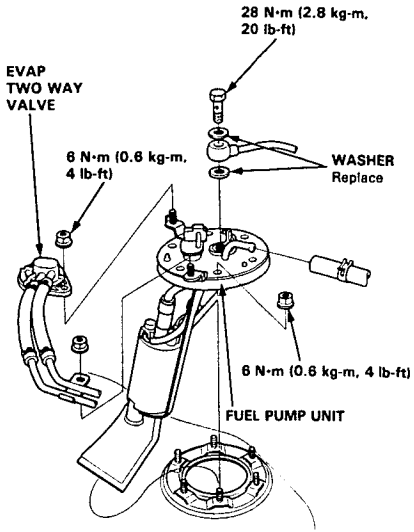

Fuel Supply System

PGM-FI Main Relay

Description

The PGM-FI main relay actually contains two individual relays.
This relay is located at the left side of the cowl.
One relay is energized whenever the ignition is on which supplies the battery voltage to the ECM, power to the fuel injectors, and power for the second relay.
The second relay is energized for two seconds when the ignition is switched on, and when the engine is running which supplies power to the fuel pump.

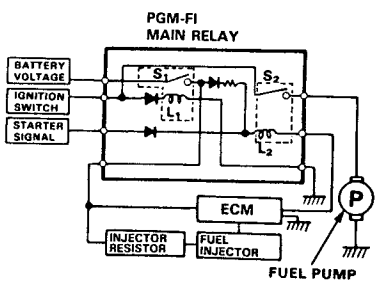

Relay Testing

NOTE: If the car starts and continues to run, the PGM-FI main relay is OK.

1. Remove the PGM-FI main relay.

2. Attach the battery positive terminals to the No. 6 terminal and the battery negative terminal to the No. 8 terminal of the PGM-FI main relay. Then check for continuity between the No. 5 terminal and No. 7 terminal of the PGM-FI main relay.

   - If there is continuity, go on to step 3.
   - If there is no continuity, replace the PGM-FI main relay and retest.

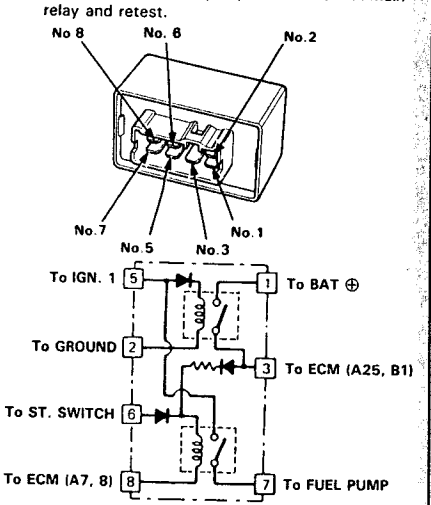

3. Attach the battery positive terminal to the No. 5 terminal and the battery negative terminal to the No. 2 terminal of the PGM-FI main relay. Then check that there is continuity between the No. 1 terminal and No. 3 terminal of the PGM-FI main relay.

   - If there is continuiyt, go on to step 4.
   - If there is no continuity, replace the PGM-FI main relay and retest.

4. Attach the battery positive terminal to the No. 3 terminal and the battery negative terminal to the No. 8 terminal of the PGM-FI main relay. Then check that there is continuity between the No. 5 terminal and No. 7 terminal of the PGM-Fi main relay.

   - If there is continuity, the PGM-FI main relay is OK.
   - If there is no continuity, replace the PGM-FI main relay and retest.

(cont'd)

PGM-FI Main Relay (cont'd)

Troubleshooting Flowchart

- Engine will not start.
- Inspection of PGM-FI main relay and relay harness.

Disconnect the PGM-FI main relay connector.

Check for continuity between BLK terminal ② and body ground.

Is there continuity? — NO → Repair open in BLK wire between PGM-FI main relay and G101 (located at left side of engine).

YES

Measure the voltage between YEL/BLU terminal ① and body ground.

Is there battery voltage? — NO →
- Replace the ECU (ECM) (10 A) fuse in the under-hood fuse/relay box.
- Repair open in the YEL/BLU wire between the PGM-FI main relay and the ECU (ECM) (10A) fuse.

YES

Turn the ignition switch ON.

Measure the voltage between BLK/YEL terminal ⑤ and body ground.

Is there battery voltage? — NO →
- Replace the No. 2 ECU (ECM) (15 A) fuse in the under-dash fuse/relay box.
- Repair open in the BLK/YEL wire between the PGM-FI main relay and the No. 2 ECU (ECM) (15 A) fuse.

YES

Turn the ignition switch to the START position.

Measure the voltage between BLK/WHT terminal ⑥ and body ground.

NOTE:
- M/T: Clutch pedal must be depressed.
- A/T: Transmission in [N] or [P] position.

Is there battery voltage? — NO → Repair open in the BLK/WHT wire between the PGM-FI main relay and the ignition switch.

YES

(To page 11-123)

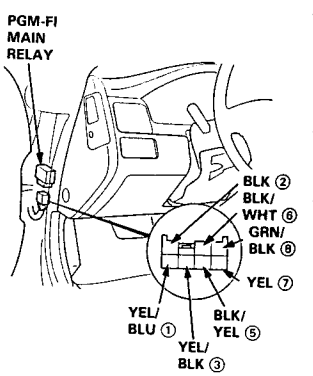

(From page 11-122)

Turn the ignition switch OFF.

Connect the test harness between the ECM and connectors. Disconnect "A" connector from the ECM only, not the main wire harness (see page 11-39).

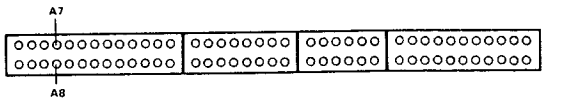

Check for continuity between GRN/BLK terminal ⑧ and the following terminals; A7, A8.

Is there continuity? — NO → Repair open in GRN/BLK wire between ECM (A7, A8) and PGM-FI main relay.

YES

Reconnect "A" connector to the main wire harness.

Connect the PGM-FI main relay connector.

Turn the ignition switch ON.

Measure the voltage between A23 (−) terminal and the following terminals: A25 (+) B1 (+).

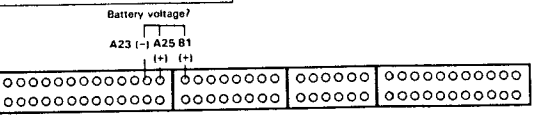

Is there battery voltage? — NO →
- Repair open in the YEL/BLK wire between the ECM (A25, B1) and PGM-FI main relay.
- Replace PGM-FI main relay.

YES

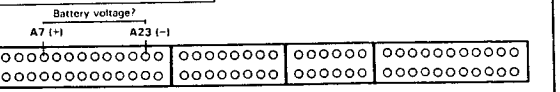

Turn the ignition switch OFF.

Connect a voltmeter between A7 (+) terminal and A23 (−) terminal.

Is there battery voltage for two seconds after the ignition switch is first turned on? — YES → Substitute a known-good ECM and recheck. If prescribed voltage is now available, replace the original ECM.

NO

Check the PGM-FI main relay (see page 11-120).

Fuel Supply System

Fuel Tank

Replacement

⚠ WARNING Do not smoke while working on fuel system. Keep open flame away from your work area.

1. Block front wheels. Jack up the rear of the car and support with jackstands.
2. Remove the drain bolt and drain the fuel into an approved container.
3. Disconnect the 4P connector (located under the trunk floor).

   CAUTION: Be sure to turn the ignition switch OFF before disconnecting the wires.

4. Remove the fuel hose protector.
5. Disconnect the hoses.

   CAUTION: When disconnecting the hoses, slide back the clamps, then twist hoses as you pull to avoid damaging them.

6. Place a jack, or other support, under the tank.
7. Remove the strap bolts, and let the straps fall free.
8. Remove the fuel tank.
   NOTE: The tank may stick on the undercoat applied to its mount. To remove, carefully pry it off the mount.
9. Install a new washer on the drain bolt and the fuel pump line, then install parts in the reverse order of removal.

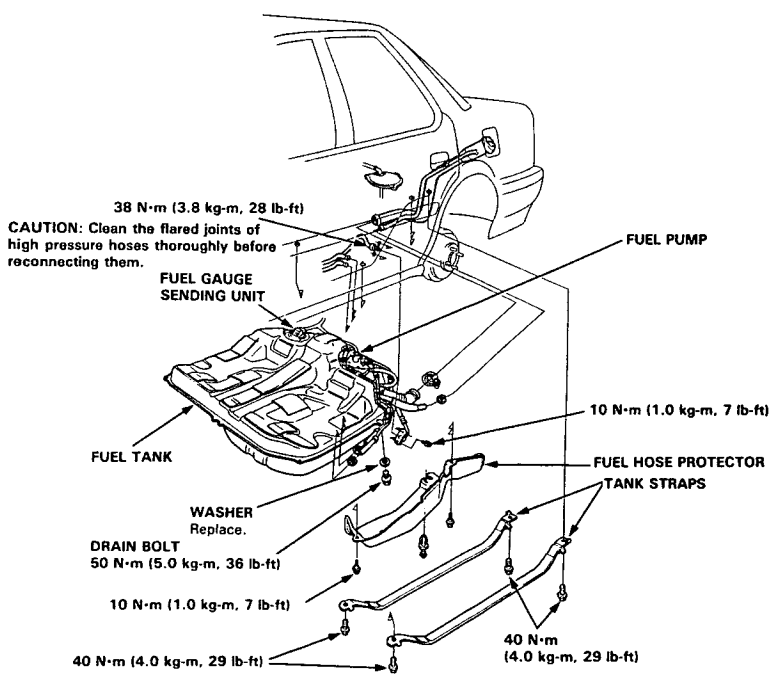

Intake Air System

System Troubleshooting Guide

NOTE: Across each row in the chart, the sub-system that could be sources of a symptom are ranked in the order they should be inspected starting with ①. Find the symptom in the left column, read across to the most likely source, then refer to the page listed at the top of that column. If inspection shows the system is OK, try the next system ②. etc.

PAGE / SUB-SYSTEM	THROTTLE CABLE	THROTTLE BODY	INTAKE AIR BYPASS CONTROL SYSTEM
SYMPTOM	128	129	132
WHEN COLD FAST IDLE OUT OF SPEC	②	①	
WHEN WARM IDLE SPEED TOO HIGH	②	①	
LOSS OF POWER	①		②

Intake Air System

System Description

The system supplies air for all engine needs. It consistes of the intake air pipe, Air Cleaner (ACL), intake air duct, Throttle Body (TB), Idle Air Control (IAC) Valve, fast idle thermo valve, and intake manifold. A resonator in the intake air pipe provides additional silencing as air is drawn into the system.

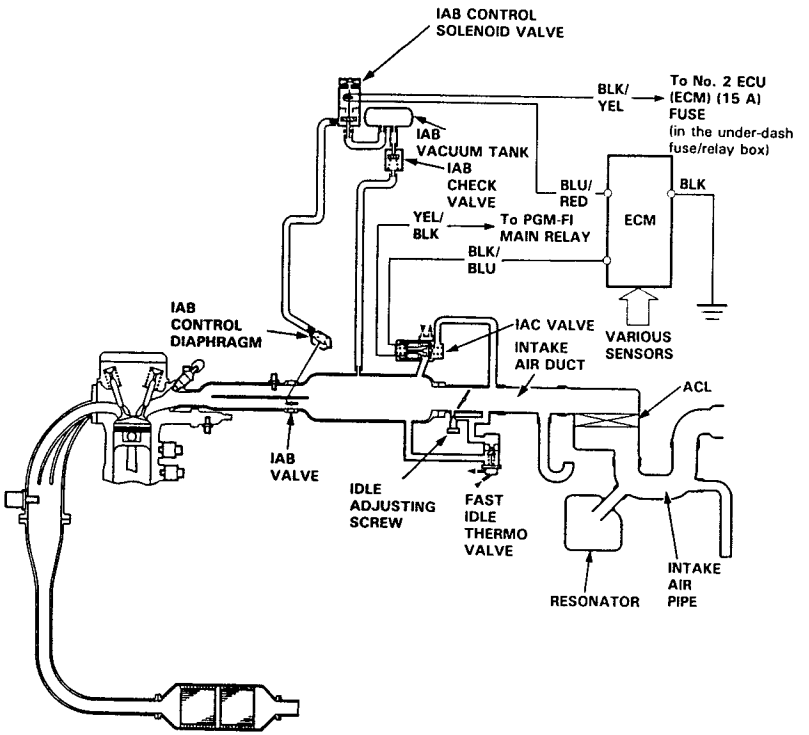

Air Cleaner (ACL)

AIR CLEANER (ACL) Element Replacement

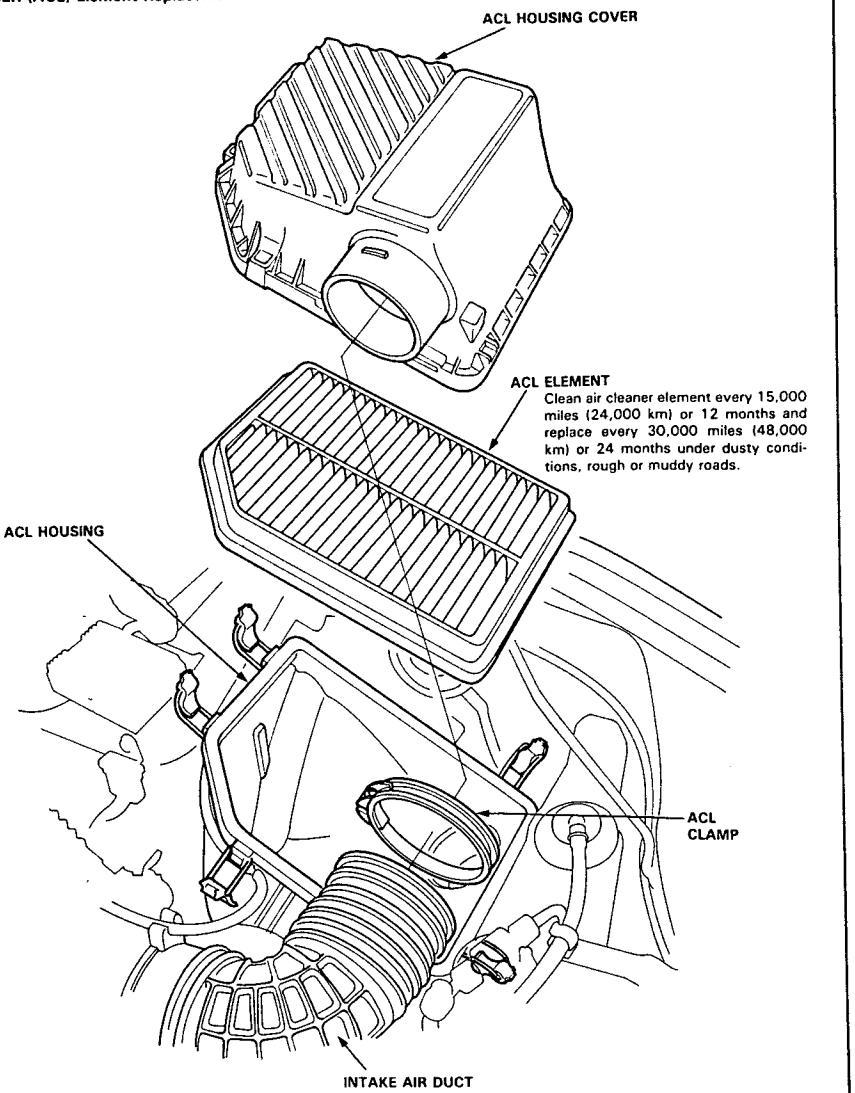

Intake Air System

Throttle Cable

Inspection/Adjustment

1. Warm up the engine to normal operating temperature (the radiator fan comes on).
2. Check that the throttle cable operates smoothly with no binding or sticking. Repair as necessary.
3. Check cable free play at the throttle linkage. Cable deflection should be 10–12 mm (0.39–0.47 in.)

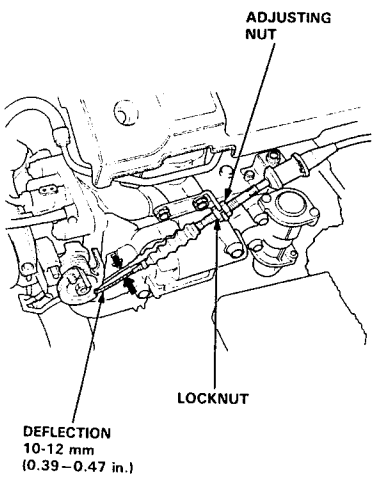

4. If deflection is not within specs, loosen the locknut, turn the adjusting nut until the deflection is as specified, then retighten the locknut.
5. With the cable properly adjusted, check the throttle valve to be sure it opens fully when you push the accelerator pedal to the floor. Also check the throttle valve to be sure it returns to the idle position whenever you release the accelerator pedal.

Installation

1. Fully open the throttle valve, then install the throttle cable in the throttle linkage and install the cable housing in the cable bracket.
2. Warm up the engine to normal operating temperature (the radiator fan comes on).

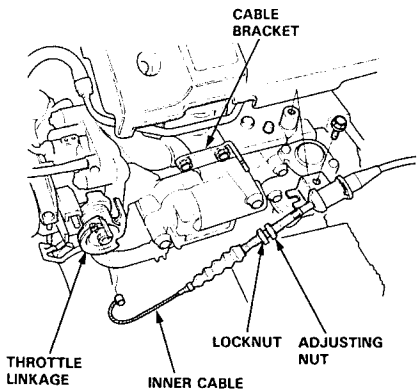

3. Hold the cable sheath, removing all slack from the cable.
4. Turn the adjusting nut until it is 3 mm (0.12 in.) away from the cable bracket.
5. Tighten the locknut. The cable deflection should now be 10–12 mm (0.39–0.47 in.). If not, see inspection/adjustment.

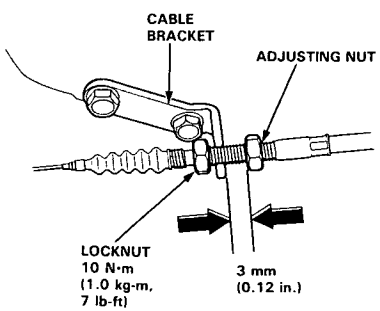

Throttle Body

Description

The throttle body is of the single-barrel side-draft type. The lower portion of the throttle valve is heated by engine coolant which is fed from the cylinder head. The idle adjusting screw which increases/decreases bypass air and the Evaporative Emission (EVAP) Control Canister port are located on the top of the throttle body.

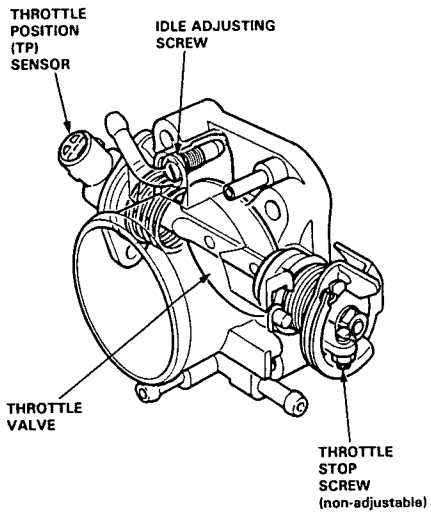

Inspection

CAUTION: Do not adjust the throttle stop screw. It is preset at the factory.

1. Start the engine and allow it to reach normal operating temperature (the radiator fan comes on).
2. Disconnect the vacuum hose (to the EVAP control canister) from the top of the throttle body; connect a vacuum gauge to the throttle body.

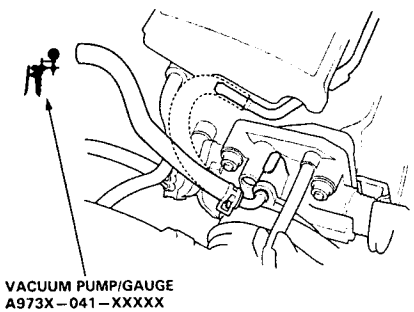

3. Allow the engine to idle and check that the gauge indicates no vacuum.
   - If there is vacuum, check the throttle cable (see page 11-128).
4. Check that vacuum is indicated on the gauge when the throttle is opened slightly from idle.
   - If the gauge indicates no vacuum, check the throttle body port. If the throttle body port is clogged, clean it with carburetor cleaner.
5. Stop the engine and check that the throttle cable operates smoothly without binding or sticking.
   - If there are any abnormalities in the above steps, check for:
     - Excessive wear or play in the throttle valve shaft.
     - Sticky or binding throttle lever at full close position.
     - Clearance between throttle stop screw and throttle lever at full close position.

(cont'd)

Throttle Body (cont'd)

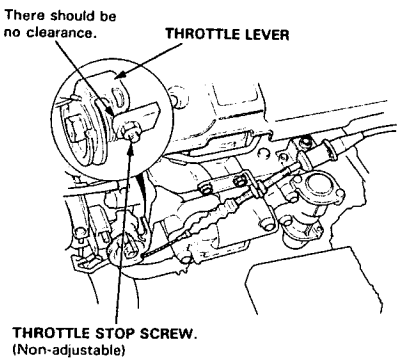

Replace the throttle body if there is excessive play in the throttle valve shaft or if the shaft is binding or sticking.

Throttle Body (cont'd)

Disassembly

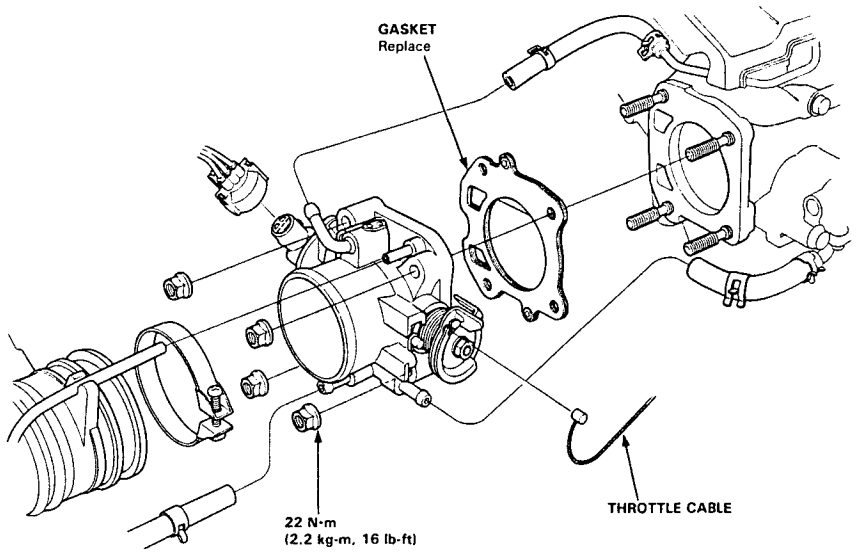

CAUTION:
- The throttle stop screw in non-adjustable.
- After reassembly, adjust the throttle cable (see page 11-128).

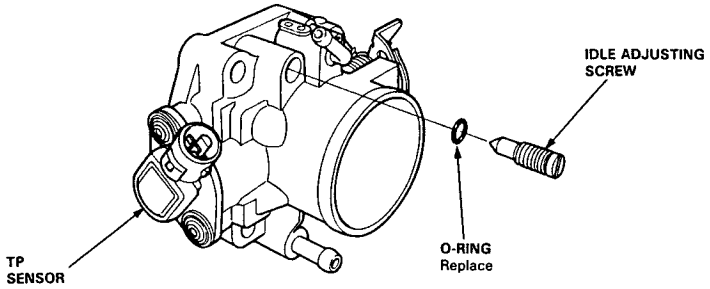

Intake Air System

Intake Air Bypass (IAB) Control System

Description

Two air intake paths are provided in the intake manifold to allow the selection of the intake path most favorable for a given engine speed.
Satisfactory power performance is achieved by closing and opening the Intake Air Bypass (IAB) valves. High torque at low rpm is acheived when the IAB valves are closed, whereas high power at high rpm is achieved when the IAB valves are opened.

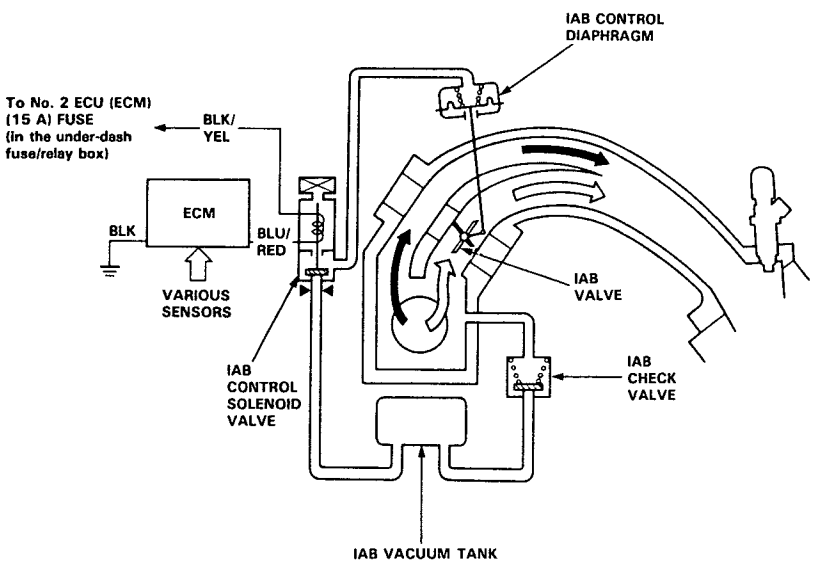

IAB CONTROL SOLENOID VALVE OFF

⇧

ENGINE RPM IS ABOVE 4,900 rpm

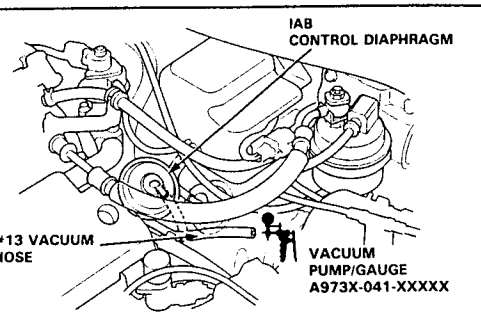

Troubleshooting Flowchart

Inspection of IAB Control System

Start engine and allow to idle.

Remove #13 vacuum hose from the IAB control diaphragm and connect vacuum gauge to the hose.

Is there vacuum ?

- NO → Disconnect the 2P connector from the IAB control solenoid valve.
- YES ↓

Measure voltage between BLK/YEL (+) terminal and BLU/RED (−) terminal.

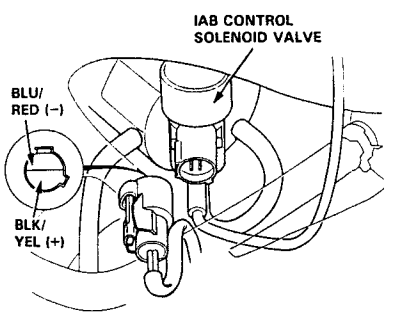

Is there battery voltage ?

- YES → Repair the blockage or vacuum leak between the intake manifold and diaphragm, if vacuum is OK, replace the IAB control solenoid valve.
- NO ↓

Measure voltage between BLK/YEL (+) terminal and body ground.

Is there battery voltage ?

- NO → Repair open in BLK/YEL wire between the 2P connector and No. 2 ECU (ECM) (15 A) fuse in the under-dash fuse/relay box.
- YES ↓

Turn the ignition switch OFF.

(To page 11-134)

(To page 11-134)

(cont'd)

Intake Air System

Intake Air Bypass (IAB) Control System (cont'd)

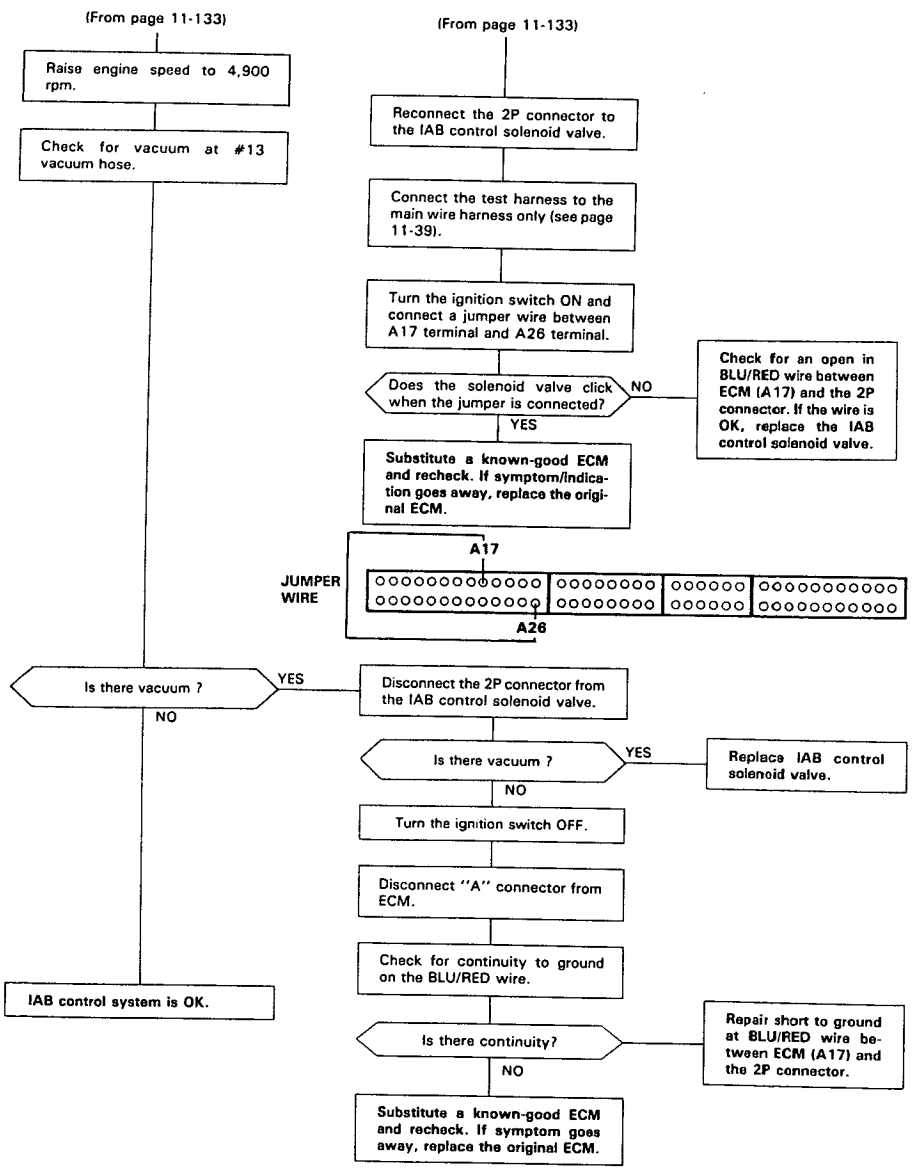

Intake Air Bypass (IAB) Valve Testing

CAUTION: Do not adjust the IAB valve full-close screw. It was preset at the factory.

1. Check the IAB valve shaft for binding or sticking.
2. Check the IAB valve for smooth movement.
3. With the engine off, check that Ⓐ of the bypass valve is in close contact with the stopper.

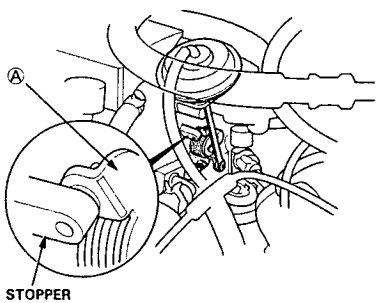

4. With the engine at idle, check that Ⓑ of the IAB valve is in close contact with the full-close screw.

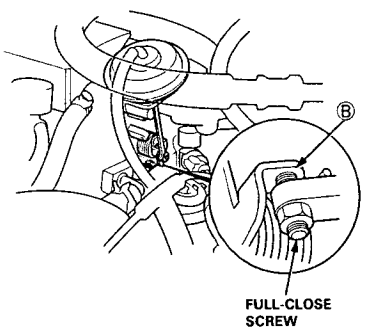

- If any fault is found, clean the linkage and shafts with carburetor cleaner.

– If the problem still exists after cleaning, disassemble the intake manifold and check the IAB valve (see page 11-136).

(cont'd)

Intake Air System

Bypass Control System (cont'd)

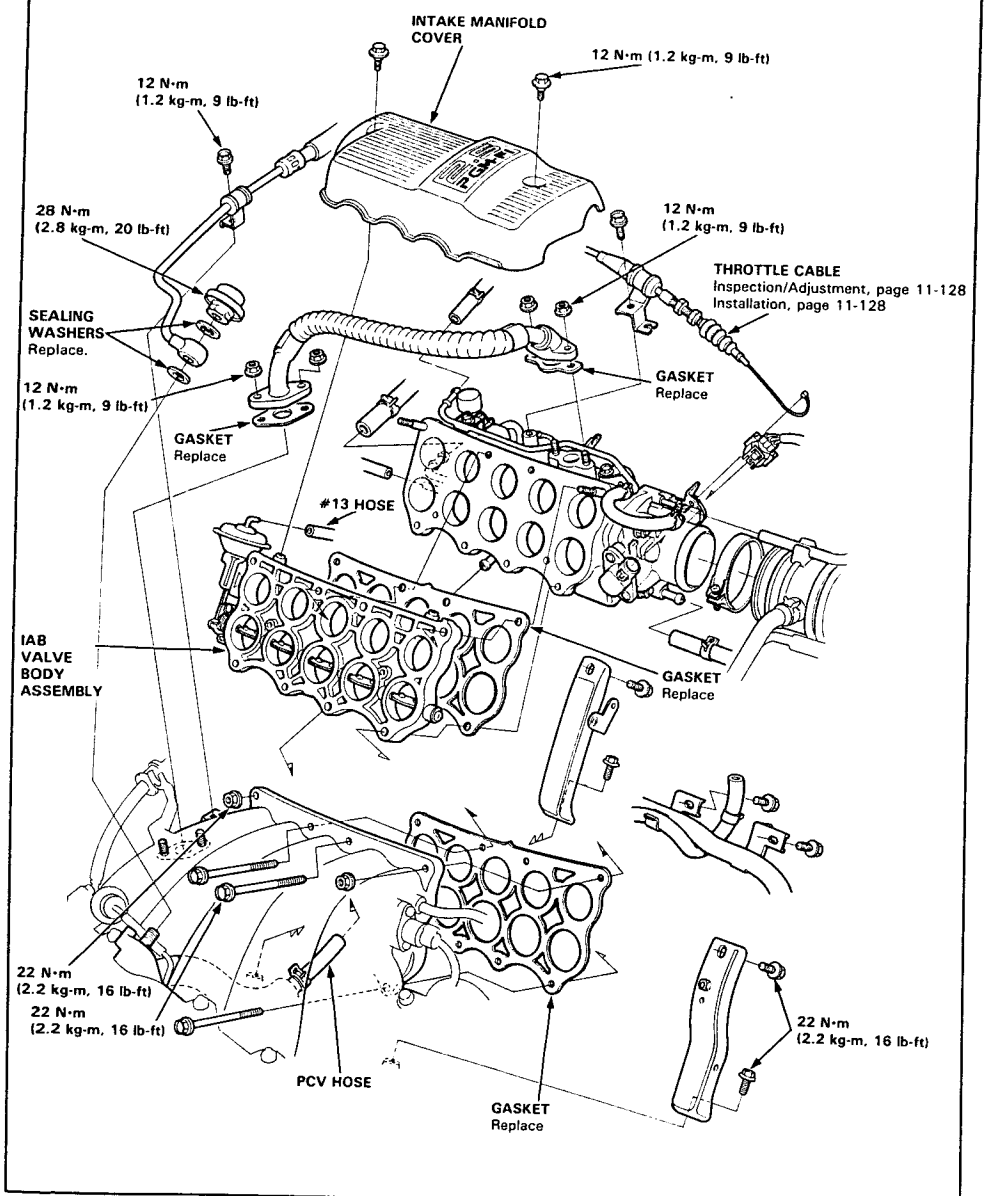

Emission Control System

System Troubleshooting Guide

NOTE: Across each row in the chart, the sub-systems that could be sources of a symptom are ranked in the order they should be inspected starting with ①. Find the symptom in the left column, read across to the most likely source, then refer to the page listed at the top of that column. If inspection shows the system is OK, try the next most likely system ②, etc.

PAGE / SYMPTOM	SUB-SYSTEM	THREE WAY CATALYTIC CONVERTER	EXHAUST GAS RECIRCULATION SYSTEM	POSITIVE CRANKCASE VENTILATION SYSTEM	EVAPORATIVE EMISSION CONTROLS
		139	141	147	148
ROUGH IDLE			①	②	
FREQUENT STALLING	AFTER WARMING UP		①		
POOR PERFORMANCE	MISFIRE OR ROUGH RUNNING		①		
	FAILS EMISSION TEST	①	③		②
	LOSS OF POWER	①	②		

Emission Control System

System Description

The emission control system includes a Three Way Catalytic Converter (TWC), Exhaust Gas Recirculation (EGR) system, Positive Crankcase Ventilation (PCV) system and Evaporative Emission (EVAP) control system. The emission control system is designed to meet federal and state emission standards.

Tailpipe Emission

Inspection

⚠WARNING Do not smoke during this procedure. Keep any open flame away from your work area.

1. Start the engine and warm up to normal operating temperature by driving on the road.
2. Connect a tachometer.
3. Check and adjust the idle speed, if necessary (see page 11-106).
4. Warm up and calibrate the CO meter according to the meter manufacturer's instructions.
5. Check idle CO with the headlights, blower fan,rear window defogger, cooling fan, and air conditioner off.

   CO meter should indicate 0.1 % maximum.

Three Way Catalytic Converter (TWC)

Description

The Three Way Catalytic Converter (TWC) is used to convert hydrocarbons (HC), carbon monoxide (CO), and oxides of nitrogen (NOx) in the exhaust gas to carbon dioxide (CO_2), dinitrogen (N_2) and water vapor.

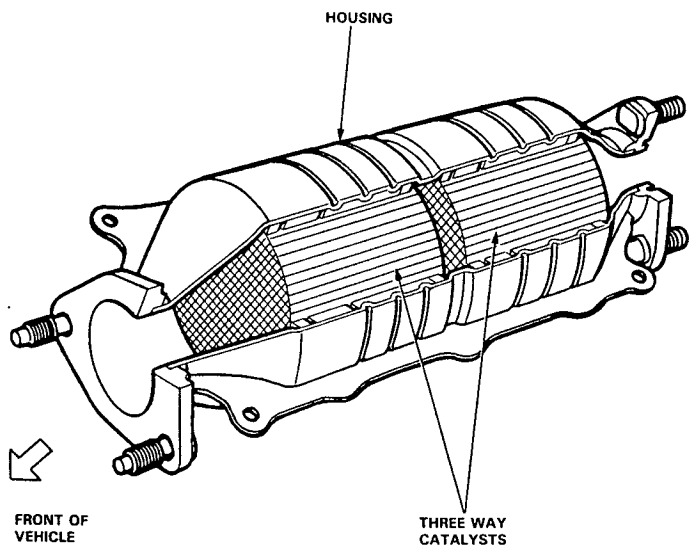

(cont'd)

Emission Control System

- Three Way Catalytic Converter (TWC) (cont'd)

Inspection

If excessive exhaust system back-pressure is suspected, remove the TWC from the car and make a visual check for plugging, melting or cracking of the catalyst. Replace the TWC if any of the visible area is damaged or plugged.

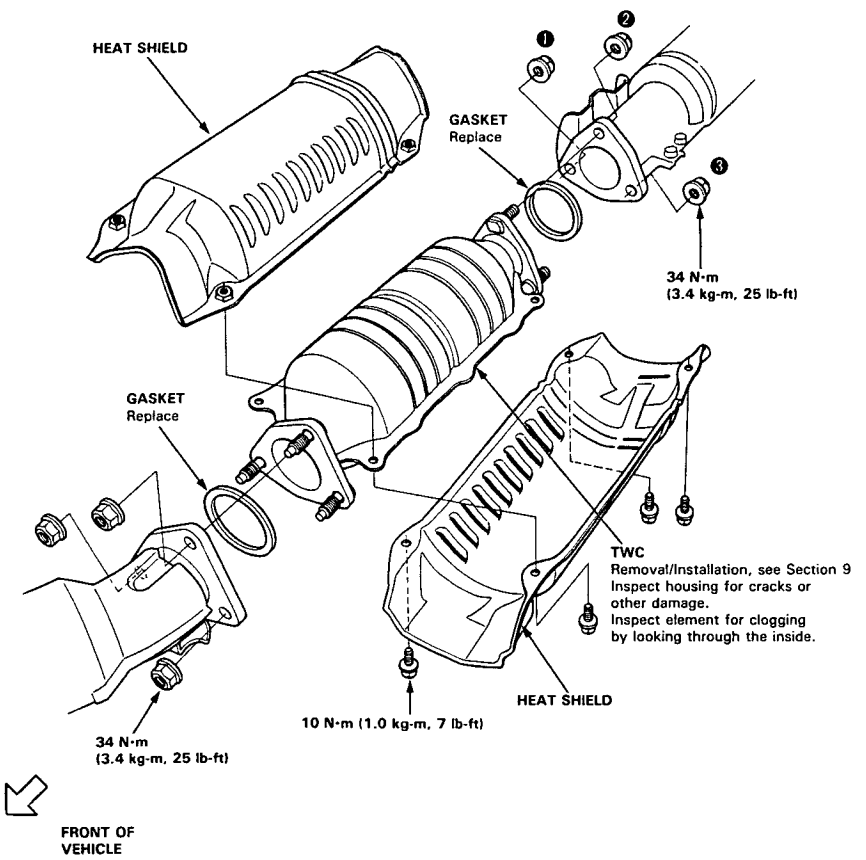

Exhaust Gas Recirculation (EGR) System

Troubleshooting Flowchart

The Malfunction Indicator Lamp (MIL) indicates Diagnostic Trouble Code (DTC) 12: A problem in the Exhaust Gas Recirculation (EGR) system.

The EGR system is designed to reduce oxides of nitrogen emissions (NOx) by recirculating exhaust gas through the EGR valve and the intake manifold into the combustion chambers. It is composed of the EGR valve, EGR vacuum control valve, EGR control solenoid valve, ECM and various sensors.

The ECM memory contains ideal EGR valve lifts for varying operating conditions. The EGR valve lift sensor detects the amount of EGR valve lift and sends the information to the ECM. The ECM then compares it with the ideal EGR valve lift which is determined by signals sent from the other sensors. If there is any difference between the two, the ECM varies current to the EGR control solenoid valve to further regulate vacuum applied to the EGR valve.

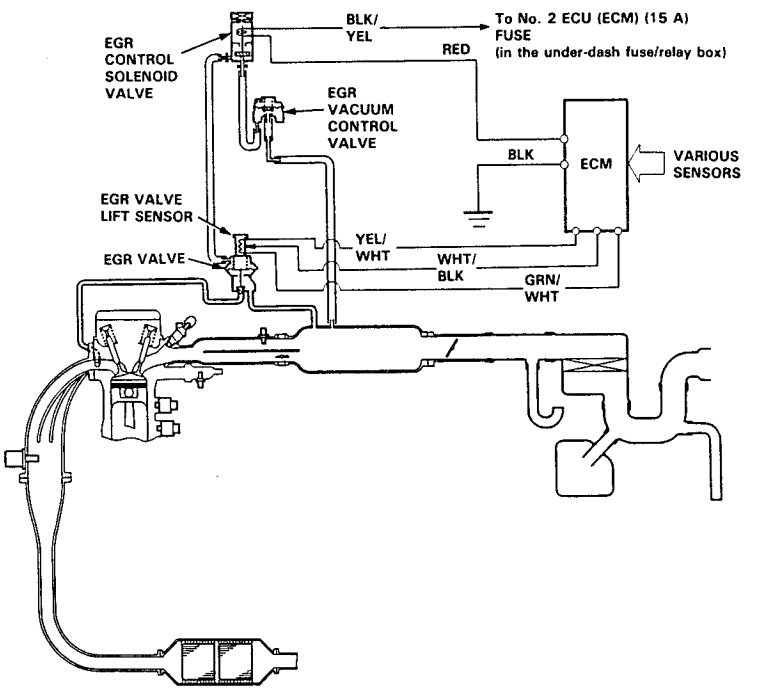

(cont'd)

Exhaust Gas Recirculation (EGR) System (cont'd)

12

- The MIL has been reported on.
- With service check connector jumped (see page 11-36), code 12 is indicated.

Do the ECM Reset Procedure (see page 11-37).

Road test necessary: Warm up the engine to normal operating temperature (the radiator fan comes on).
Drive the car on the road for approx. 10 minutes. Keep the engine speed in the 1,700–2,500 rpm range.

Is the MIL on and does it indicate code 12?

NO → Intermittent failure, system is OK at this time.
Check for poor connections or loose wires at C219 (located under the hood on the front right side of the car), C110 (EGR valve lift sensor), C305 (control box) and ECM.

YES

With the engine at idle, disconnect the #1 hose from the EGR valve and connect a vacuum pump/gauge to the hose.

Is there any vacuum?

YES → Disconnect 4P connector from the control box and check the #1 hose for vacuum again.

NO

Move the vacuum pump/gauge to the EGR valve.

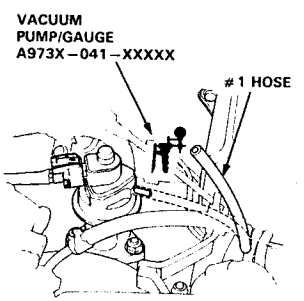

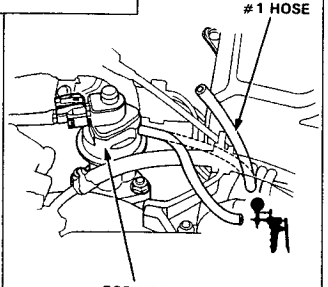

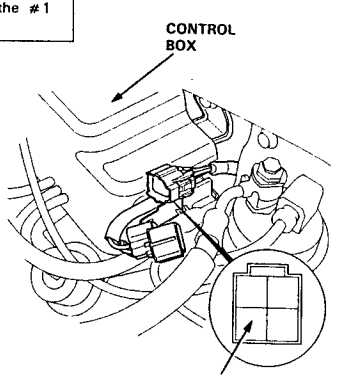

(To page 11-143)

(To page 11-143)

(From page 11-192)

With the engine at idle, apply 150 mm Hg (6 in. Hg) of vacuum to the EGR valve.

Does the engine stall or run rough and does the EGR valve hold vacuum?

NO → Replace the EGR valve.

YES

Turn the ignition switch OFF.

Disconnect the 4P connector from the control box.

Turn the ignition switch ON.

Measure voltage between BLK/YEL (+) terminal on the main wire harness and body ground.

Is there battery voltage?

NO → Repair open in BLK/YEL wire between the EGR control solenoid valve and No. 2 ECU (ECM) (15 A) fuse in the under-dash fuse/relay box.

YES

Reconnect the vacuum pump/gauge to the #1 hose.

Start the engine and allow it to idle.

(To page 11-144)

(From page 11-142)

Is there any vacuum?

YES → Check vacuum hose routing of the entire EGR system. If hose routing is OK, replace EGR control solenoid valve.

NO

Turn the ignition switch OFF and disconnect the "A" connector from the ECM.

Check for continuity to ground on RED wire of 4P connector.

Is there continuity?

YES → Repair short in RED wire between EGR control solenoid valve and ECM (A11).

NO

Substitute a known-good ECM and recheck. If symptom/indication goes away, replace the original ECM.

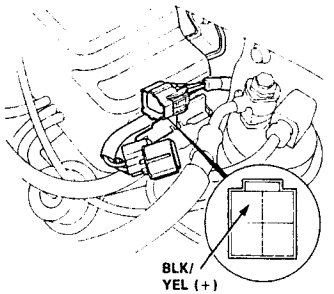

(cont'd)

Exhaust Gas Recirculation (EGR) System (cont'd)

(From page 11-143)

Connect battery power to the B terminal of the 4P connector. While watching the vacuum gauge, ground to the D terminal.

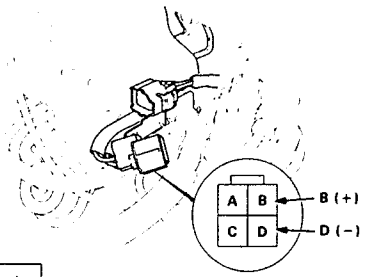

Is there approx. 150 mm Hg (6 in. Hg) within 1 second?

NO → Turn the ignition switch OFF and inspect the #1 and #2 hoses for leaks, restrictions, or misrouting.

YES → Turn the ignition switch OFF and reconnect the 4P connector.

Are the hoses OK?

NO → Correct as necessary.

YES →

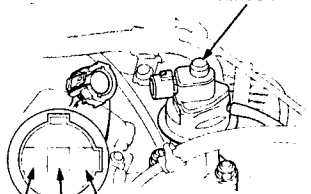

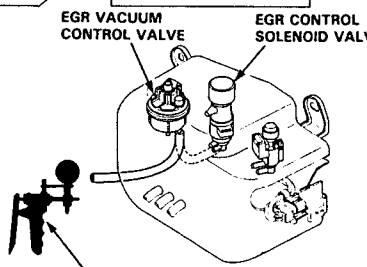

Disconnect the lower hose on EGR control solenoid valve and connect a vacuum gauge to the hose.

VACUUM PUMP/ GAUGE A973X−041−XXXXX

Start the engine and allow it to idle.

Is there approx. 150 mm Hg (6 in. Hg) of vacuum?

NO → Replace the EGR vacuum control valve.

YES → Replace the EGR control solenoid valve.

Disconnect 3P connector from the EGR valve lift sensor.

Turn the ignition switch ON.

Measure voltage between YEL/ WHT (+) terminal and GRN/WHT (−) terminal.

Is there approx. 5 V?

NO → Measure voltage between YEL/ WHT (+) terminal and body ground.

YES

(To page 11-145)

(To page 11-145)

(From page 11-144)

Turn the ignition switch OFF.

Reconnect the 3P connector to the EGR valve lift sensor.

Connect the test harness between the ECM and connectors (see page 11-39).

Turn the ignition switch ON.

Measure voltage between D12 (+) terminal and D22 (−) terminal.

Is the voltage approx. 1.2 V with no vacuum applied and approx. 4.3 V with 150 mm Hg (6 in. Hg) of vacuum applied to the EGR valve?

− Repair open or short in WHT/ BLK wire between EGR valve lift sensor and ECM (D12).
− If wire is OK, replace the EGR valve.

(To page 11-146)

(From page 11-144)

Is there approx. 5 V?

YES → Repair open in GRN/ WHT wire between EGR valve lift sensor and ECM (D22).

NO →

Turn the ignition switch OFF.

Connect the test harness "D" connector to the ECM only, not to the main wire harness (see page 11-39).

Turn the ignition switch ON.

Measure voltage between D20 (+) terminal and D22 (−) terminal.

Is there approx. 5 V?

YES → Repair open in YEL/ WHT wire between EGR valve lift sensor and ECM (D20).

NO → Substitute a known-good ECM and recheck. If prescribed voltage is now available, replace the original ECM.

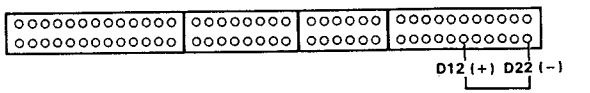

1.2 V with no vacuum applied?
4.3 V with 150 mm Hg (6in. Hg) of vacuum applied?

(cont'd)

Emission Control System

Exhaust Gas Recirculation (EGR) System (cont'd)

(From page 11-145)

Does the voltage consistently increase/decrease as the vacuum increases/decreases?

- NO → Replace the EGR valve.
- YES ↓

Reconnect the #1 hose to the EGR valve.

Start the engine and allow it to idle.

Connect A11 terminal to A26 terminal with a jumper wire.

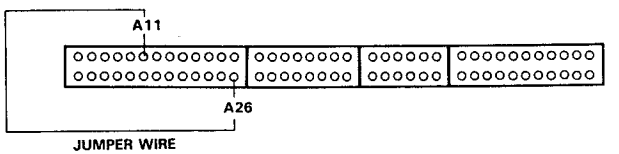

Did the engine stall or run rough?

- NO → Repair open in RED wire between ECM (A11) and EGR control solenoid valve.
- YES ↓

Substitute a known-good ECM and recheck. If symptom/indication goes away, replace the original ECM.

Positive Crankcase Ventilation (PCV) System

Description

The Positive Crankcase Ventilation (PCV) system is designed to prevent blow-by gas from escaping to the atmosphere. The PCV valve contains a spring-loaded plunger. When the engine starts, the plunger in the PCV valve is lifted in proportion to intake manifold vacuum and the blow-by gas is drawn directly into the intake manifold.

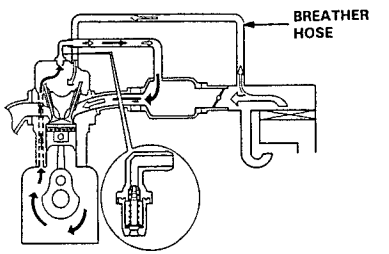

⬅: BLOW-BY VAPOR
⇦: FRESH AIR

Inspection

1. Check the PCV hoses and connections for leaks and clogging.

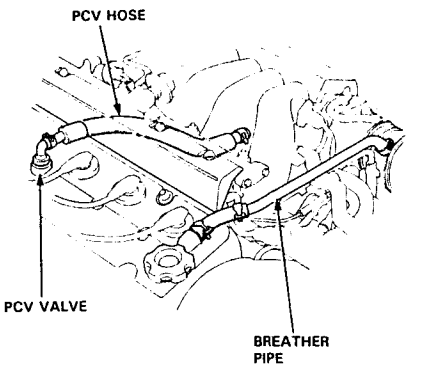

2. At idle, make sure there is a clicking sound from the PCV valve when the hose between PCV valve and intake manifold in lightly pinched with your fingers or pliers.

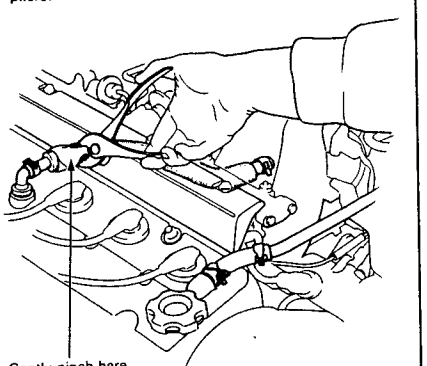

- If there is no clicking sound, check the PCV valve grommet for cracks or damage. If the grommet is OK, replace the PCV valve and recheck.

Emission Control System

Evaporative Emission Controls

Description

The evaporative emission controls are designed to minimize the amount of fuel vapor escaping to the atmosphere. The system consists of the following components:

A. **Evaporative Emission (EVAP) Control Canister**
The EVAP control canister is used for the temporary storage of fuel vapor until the fuel vapor can be purged from the EVAP control canister into the engine and burned.

B. **Vapor Purge Control System**
The EVAP control canister purging is accomplished by drawing fresh air through the EVAP control canister and into a port on the throttle body. The purging vacuum is controlled by the EVAP purge control diaphragm valve and the EVAP purge control solenoid valve.

EVAP PURGE CONTROL SOLENOID VALVE OFF AFTER STARTING ENGINE

↑

ENGINE COOLANT TEMPERATURE ABOVE 158°F (70°C)

C. **Fuel Tank Vapor Control System**
When fuel vapor pressure in the fuel tank is higher than the set value of the EVAP two way valve, the valve opens and regulates the flow of fuel vapor to the EVAP control canister.

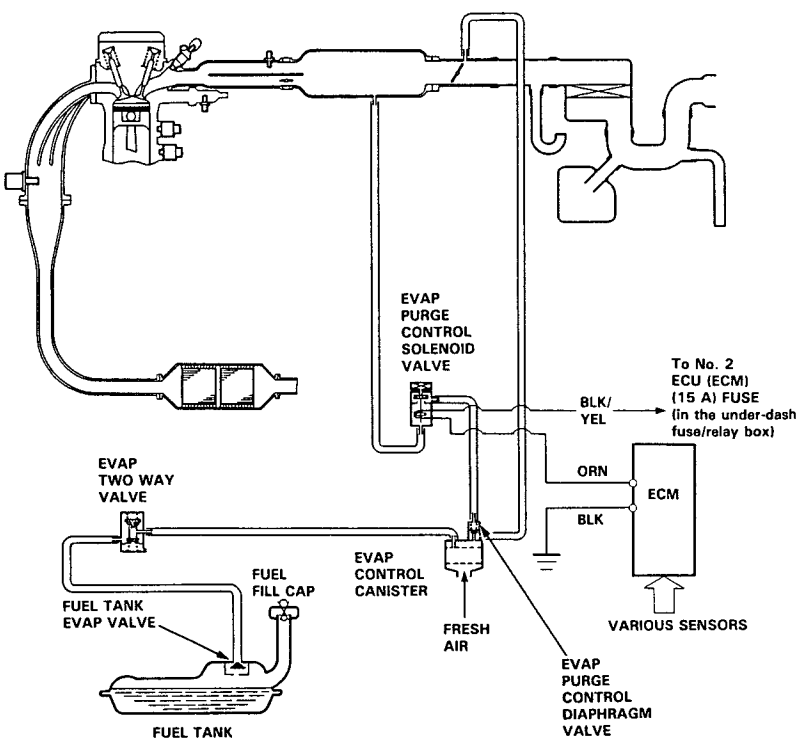

(cont'd)

Evaporative Emission Controls (cont'd)

Troubleshooting Flowchart

Inspection of Evaporative Emission Controls

Disconnect #3 vacuum hose from the EVAP purge control Diaphragm valve (on the EVAP control canister) and connect a vacuum gauge to the hose.

Start the engine and allow it to idle.
NOTE: Engine coolant temperature must be below 158°F (70°C).

Is there vacuum ?
- YES → Disconnect the 2P connector from the EVAP purge control solenoid valve.
- NO → (To page 11-151)

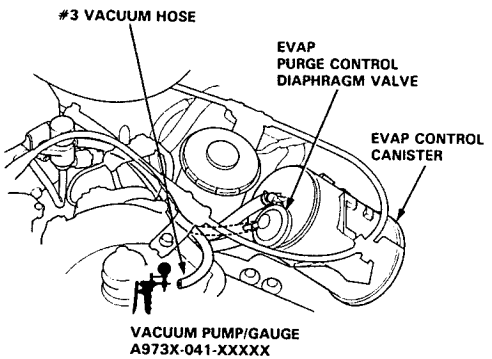

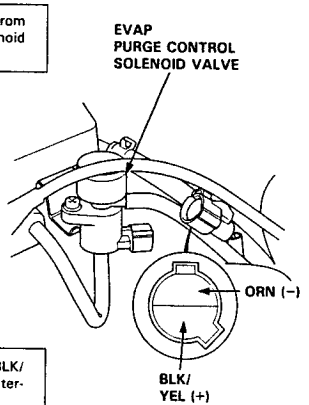

Measure voltage between BLK/YEL (+) terminal and ORN (−) terminal.

Is there battery voltage ?
- YES → Inspect vacuum hose routing. If OK, replace the EVAP purge control solenoid valve.
- NO → Measure voltage between BLK/YEL (+) terminal and body ground.

(To page 11-151)

(From page 11-150)

Warm up the engine to normal operating temperature (the radiator fan comes on).

Check for vacuum at #3 vacuum hose after starting the engine.

Is there manifold vacuum?
- NO → Disconnect the 2P connector.
  - Is there manifold vacuum?
    - NO → Inspect vacuum hose routing. If OK, replace EVAP purge control solenoid valve.
    - YES → Inspect for a short in ORN wire between ECM (A 10) and the 2P connector. If wire is OK, substitute a known-good ECM and recheck. If symptom goes away, replace the original ECM.
- YES → Reconnect the hose.

Remove fuel fill cap

(To page 11-152)

(From page 11-150)

Is there battery voltage ?
- NO → Repair open in BLK/YEL wire between No. 2 ECU (ECM) (15 A) fuse in the under-dash fuse/relay box and the 2P connector.
- YES → Inspect ORN wire for an open to body ground between ECM (A 10) and the connector. If wire is OK, substitute a known-good ECM and recheck. If symptom goes away, replace the original ECM.

(cont'd)

(From page 11-151)

Connect a vacuum gauge to EVAP control canister purge air hose.

Start the engine and raise speed to 3,500 rpm.

Does vacuum appear on gauge within 1 minute ?

NO → Connect a vacuum gauge to the purge hose and raise the engine speed to 3,500 rpm.

YES → **See EVAP two way valve test to complete. Evaporative emission controls are OK.**

Does vacuum appear on the gauge?

NO → **Inspect the purge hose and throttle body port for pinch or blockage.**

YES → **Replace the EVAP control canister.**

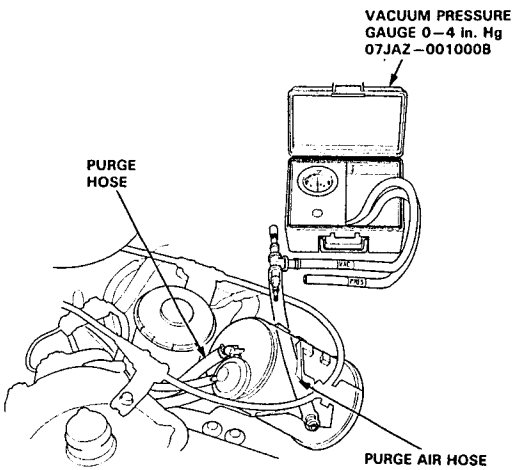

Evaporative Emission (EVAP) Two Way Valve Test

1. Remove the fuel fill cap.
2. Remove vapor line from the fuel tank and connect to T-fitting from vacuum gauge and vacuum pump as shown.

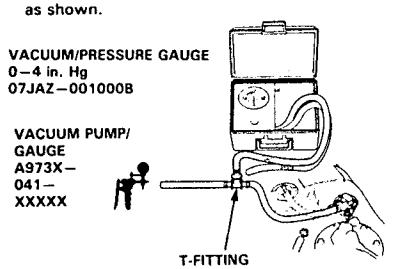

3. Apply vacuum slowly and continuously while watching the gauge.

   Vacuum should stabilize momentarily at 5 to 15 mmHg (0.2 to 0.6 in. Hg).
   - If vacuum stabilizes (valve opens) below 5 mmHg (0.2 in. Hg) or above 15 mmHg (0.6 in. Hg), install new valve and retest.
4. Move vacuum pump hose from vacuum to pressure fitting, and move vacuum gauge hose from vacuum to pressure side as shown.

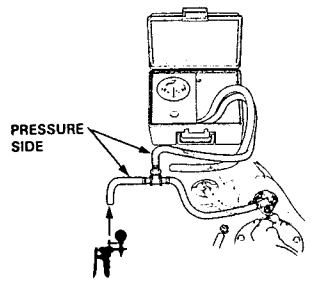

5. Slowly pressurize the vapor line while watching the gauge.

   Pressure should stabilize at 10 to 35 mmHg (0.4 to 1.4 in. Hg).
   - If pressure momentarily stabilizes (valve opens) at 10 to 35 mmHg (0.4 to 1.4 in. Hg), the valve is OK.
   - If pressure stabilizes below 10 mmHg (0.4 in. Hg) or above 35 mmHg (1.4 in. Hg), install a new valve and retest.

Transaxle

Clutch 12–1
Manual Transmission 13–1
Automatic Transmission 14–1
Differential 15–1
Driveshafts 16–1

Clutch

Special Tools 12-2
Illustrated Index 12-3
Clutch Pedal
  Adjustment 12-4
Clutch Master Cylinder
  Removal/Installation 12-5
Slave Cylinder
  Removal 12-6
  Installation 12-6
Pressure Plate, Clutch Disc
  Removal 12-7
Pressure Plate
  Inspection 12-7
Clutch Disc
  Inspection 12-8
Flywheel
  Inspection 12-9
  Replacement 12-9
Release Fork, Release Arm, Release Bearing
  Inspection 12-10
  Replacement 12-10
Pressure Plate, Clutch Disc
  Installation 12-11

Special Tools

Ref. No.	Tool Number	Description	Qty	Page Reference
①	07LAB–PV00100 or 07924–PD20003	Ring Gear Holder	1	12-7, 9, 11
②	07LAF–PT00110	Clutch Alignment Shaft	1	12-11
③	07936–3710100	Handle	1	12-11

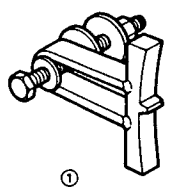

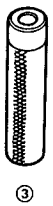

Illustrated Index

NOTE:
- Whenever the transmission is removed, clean and grease the release bearing sliding surface.
- If the parts marked* are removed, the clutch hydraulic system must be bled.
- Bleed the clutch hydraulic system (see page 12-6).
- Inspect the hoses for damage, leaks, interference, and twisting.

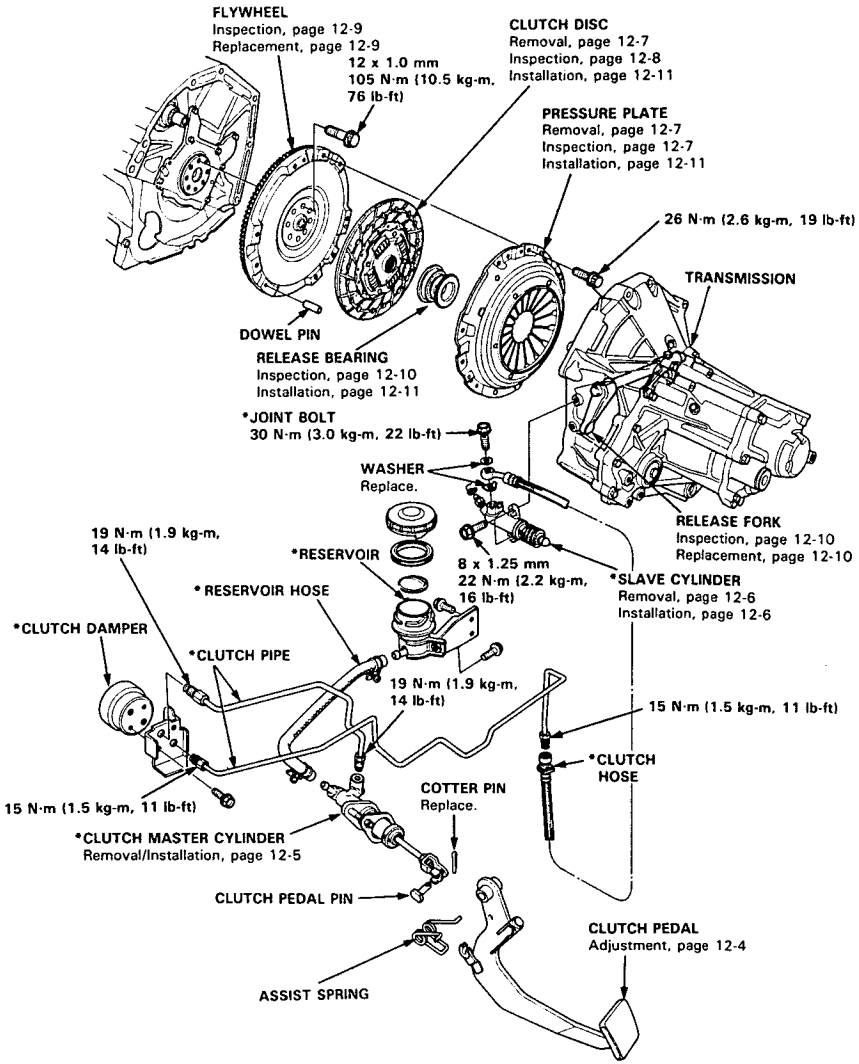

Clutch Pedal

Adjustment

NOTE:
- To test the clutch pedal switch A and B, see section 23.
- The clutch is self-adjusting to compensate for wear.

CAUTION: If there is no clearance between the master cylinder piston and push rod, the release bearing is held against the diaphragm spring, which can result in clutch slippage or other clutch problems.

1. Loosen locknut A, and back off the clutch pedal switch A until it no longer touches the clutch pedal.
2. Loosen locknut C, and turn the push rod in or out to get the specified stroke and height at the clutch pedal.
3. Tighten locknut C.
4. Thread in the clutch pedal switch A in until it contacts the clutch pedal.
5. Turn the clutch pedal switch A in 1/4–1/2 turn further.
6. Tighten locknut A.
7. Loosen locknut B and clutch pedal switch B.
8. Measure the clearance between the floor panel and clutch pedal with the clutch pedal fully depressed.
9. Release the clutch pedal 15–20 mm (0.59–0.79 in) from the fully depressed position and hold it there. Adjust the position of clutch pedal switch B so that the engine will start with the clutch pedal in this position.
10. Thread the clutch pedal switch B in 1/4–1/2 turn further.
11. Tighten locknut B.

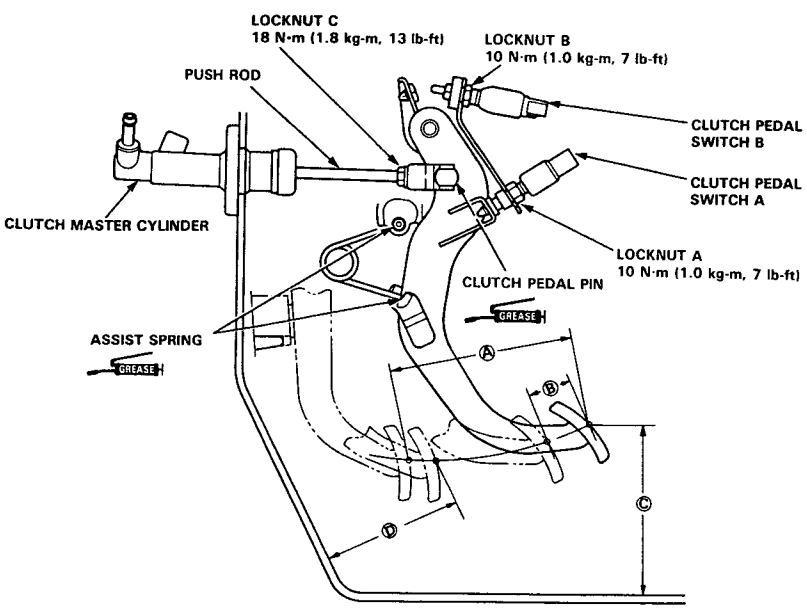

Ⓐ (STROKE at PEDAL): 140–150 mm (5.51–5.91 in)
Ⓑ (TOTAL CLUTCH PEDAL FREE PLAY): 9–15 mm (0.35–0.59 in) including the pedal play 1–7 mm (0.04–0.28 in).
Ⓒ (CLUTCH PEDAL HEIGHT): 207.5 mm (8.17 in) to the floor panel
Ⓓ (CLUTCH PEDAL DISENGAGEMENT HEIGHT): 116 mm (4.57 in) minimum to the floor panel.

Clutch Master Cylinder

Removal/Installation

1. Remove the evaporative emission (EVAP) control canister.

   NOTE: Do not disconnect the hoses from the evaporative emissin (EVAP) control canister.

2. Remove the clutch pipe, and disconnect the reservoir hose from the clutch master cylinder.

   CAUTION:
   - **Do not spill brake fluid on the car; it may damage the paint; if brake fluid does contact the paint, wash it off immediately with water.**
   - **Plug the end of the clutch pipe and reservoir hose with a shop towel to prevent fluid from flowing out of the clutch pipe and reservoir hose after disconnecting.**

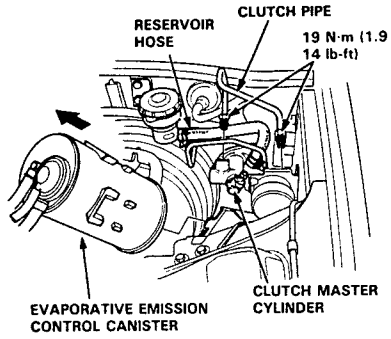

3. Remove the dashboard lower panel.

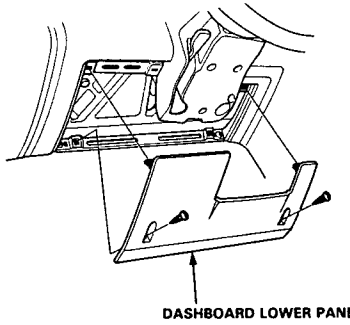

4. Remove the nuts, cotter pin, and clutch pedal pin.

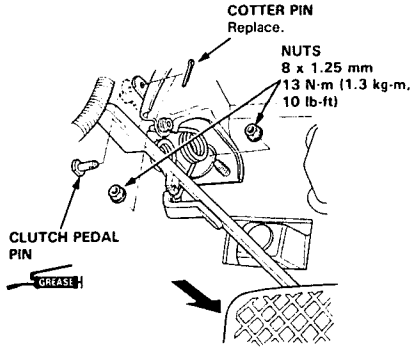

5. Remove the clutch master cylinder.

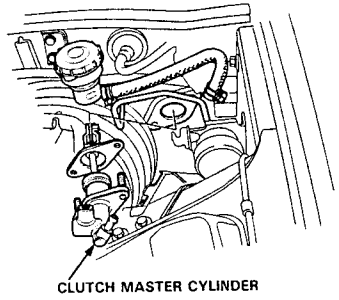

6. Install the clutch master cylinder in the reverse order of removal.

   NOTE: Bleed the clutch hydraulic system (see page 12-6).

Slave Cylinder

Removal

1. Remove the joint bolt, then disconnect the clutch hose.

   CAUTION:
   - **Do not spill brake fluid on the car; it may damage the paint; if brake fluid does contact the paint, wash it off immediately with water.**
   - **Plug the end of the clutch hose with a shop towel to prevent brake fluid from coming out.**

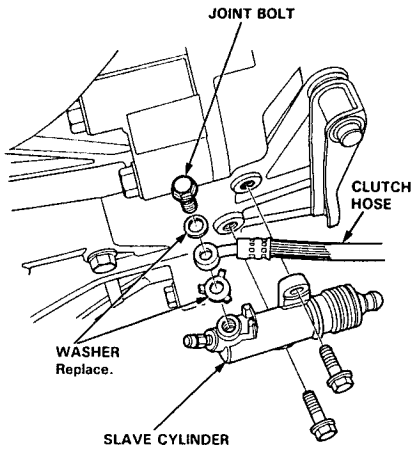

2. Remove the slave cylinder from the clutch housing.

Installation

GREASE : Super High Temp Urea Grease (P/N 08798–9002).
GREASE : Brake Assembly Lube or equivalent rubber grease.

1. Install the slave cylinder on the clutch housing.
2. Connect the clutch hose, then install the joint bolt.

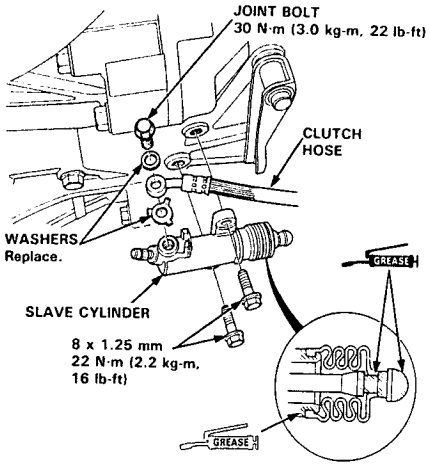

3. Bleed the clutch hydraulic system:
   - Attach a hose to the bleeder screw, and suspend the hose in a container of brake fluid.
   - Make sure there is an adequate supply of fluid at the clutch master cylinder, then slowly pump the clutch pedal until no more bubbles appear at the bleeder hose.
   - Refill the clutch master cylinder fluid when done.
   - Use only DOT 3 or 4 brake fluid.

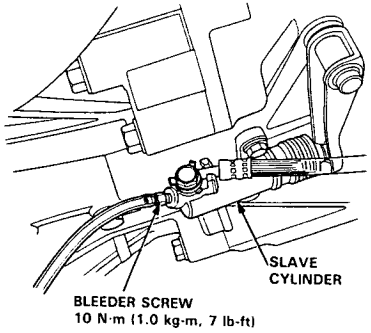

Pressure Plate, Clutch Disc

Removal

1. Install the special tools as shown.

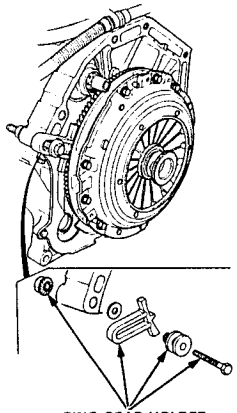

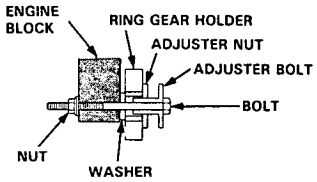

2. To prevent warping, unscrew the pressure plate mounting bolts in a crisscross pattern in several steps, then remove the pressure palte and the clutch disc.
3. Remove the release bearing from the pressure plate.

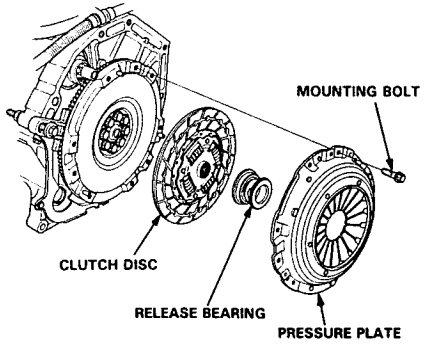

Pressure Plate

Inspection

1. Inspect the pressure plate surface for wear, cracks, and burning.
2. Inspect the fingers of the diaphragm spring for wear at the release bearing contact area.
3. Inspect for warpage using a straight edge and feeler gauge.

   NOTE: Measure across the pressure plate at three points.

   Standard (New): 0.03 mm (0.001 in) max.
   Service Limit: 0.15 mm (0.006 in)

   If the exceeds the service limit, replace the pressure plate.

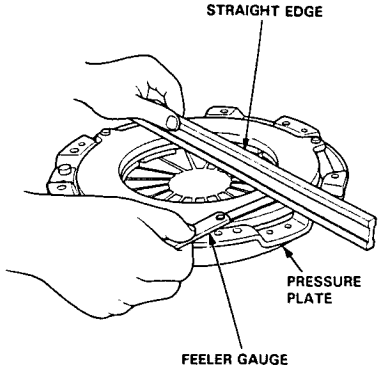

Clutch Disc

Inspection

1. Inspect the lining of the clutch disc for signs of slipping or oil. Replace it if it is burned black and oil soaked.

2. Measure the clutch disc thickness.

   Clutch Disc Thickness:
   Standard (New): 8.6–9.3 mm (0.34–0.37 in)
   Service Limit: 6.2 mm (0.24 in)

   If the thickness is less than the service limit, replace the clutch disc.

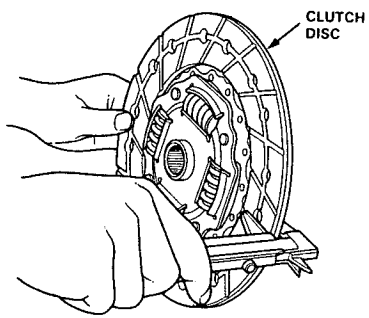

3. Measure the depth from the lining surface to the rivets, on both sides.

   Rivet Depth:
   Standard (New): 1.3 mm (0.05 in) min.
   Service Limit: 0.2 mm (0.01 in)

   If the depth is less than the service limit, replace the clutch disc.

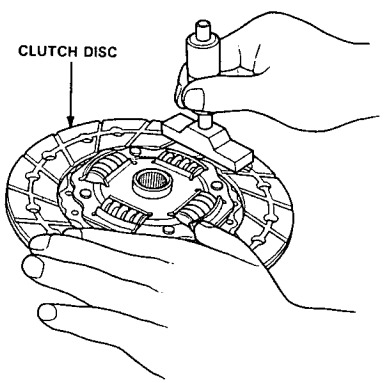

Flywheel

Inspection

1. Inspect the ring gear teeth for wear and damage.

2. Inspect the clutch disc mating surface on the flywheel for wear, cracks, and burning.

3. Measure the flywheel runout using a dial indicator through at least two full turns. Push the flywheel towards the engine to take up the crankshaft thrust washer clearance.

   NOTE: The runout can be measured with engine installed.

   Standard (New): 0.05 mm (0.002 in) max.
   Service Limit: 0.15 mm (0.006 in)

   If the runout exceeds the service limit, replace the flywheel.

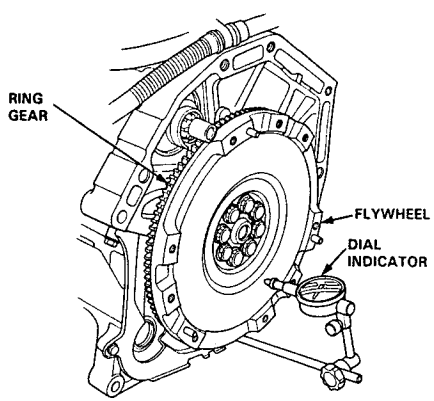

Replacement

1. Install the special tool, then remove the flywheel mounting bolts from the flywheel in a crisscross pattern in several steps.

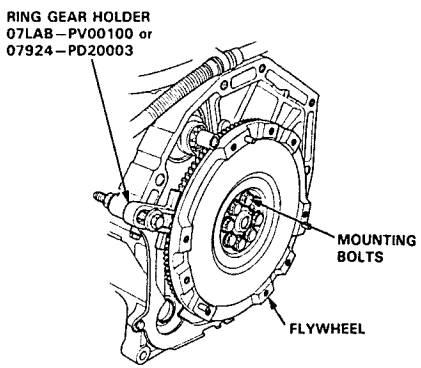

2. Align the hole in the flywheel with the crankshaft dowel pin, and assemble. Install the mounting bolts only finger tight.

3. Torque the flywheel mounting bolts in a crisscorss pattern, in several steps as shown.

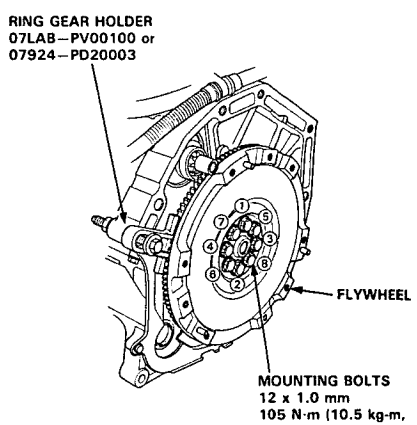

Release Fork, Release Arm, Release Bearing

Inspection

1. Check the release bearing for excessive play by spinning it by hand.

   CAUTION: Do not wash it in solvent.

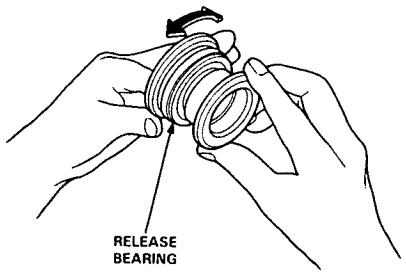

2. If there is excessive play, replace the release bearing with a new one.
3. Inspect the release arm for freedom of movement.
4. Install the release bearing, then recheck the release arm for freedom of movement.

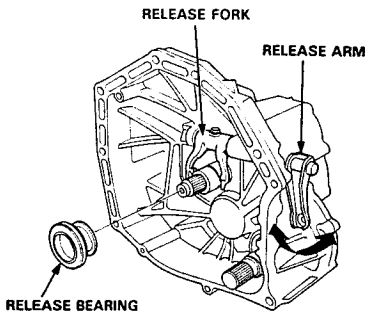

Replacement

1. Remove the bolt and spring washer, then remove the release arm and release fork.
2. Install the release fork and release arm in the reverse order of removal.

   NOTE: Use only Super High Temp Urea Grease (P/N 08798-9002).

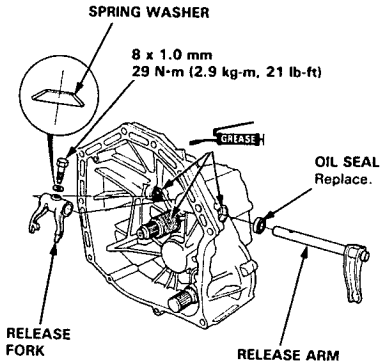

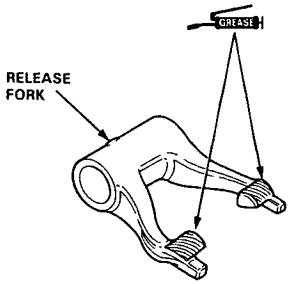

Pressure Plate, Clutch Disc

Installation

1. Install the ring gear holder.
2. Apply Super High Temp Urea Grease (P/N 08798-9002) to the splines of the clutch disk, and install the clutch disc using the special tools as shown.

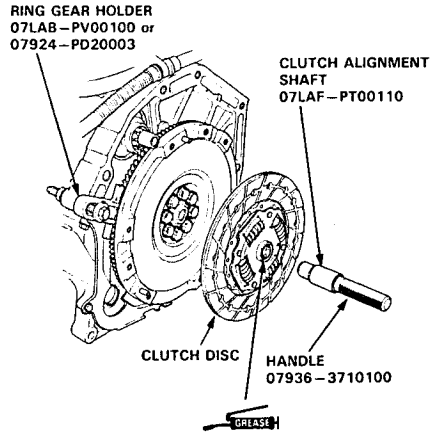

3. Install the release bearing on the pressure plate.
4. Install the pressure plate.

   NOTE: After installing the pressure plate, make sure the release bearing did not come off.

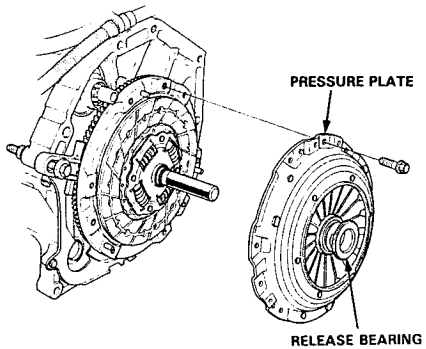

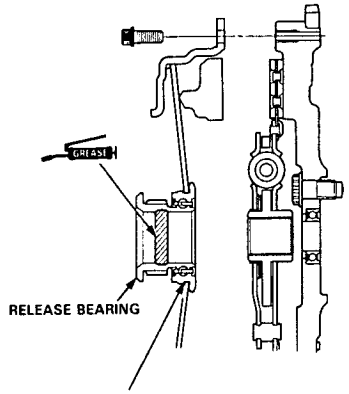

Place the diaphragm spring fingers in the groove of the release bearing.

5. Torque the mounting bolts in a crisscross pattern as shown. Tighten the bolts in several steps to prevent warping the diaphragm spring.

   NOTE: After installing the pressure plate, make sure the release bearing does not come off.

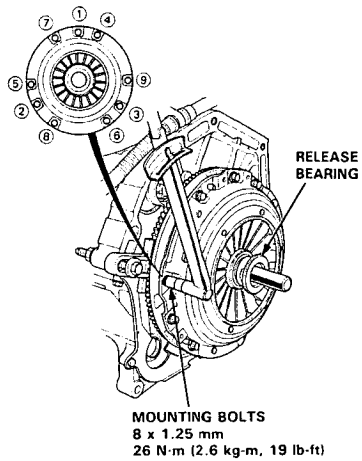

6. Remove the special tools.

SUPPLEMENTAL RESTRAINT SYSTEM (SRS)
(If manual transmission maintenance is required)

The VIGOR SRS includes a driver's side airbag, located in the steering wheel hub. In addition, the GS model has a front passenger's airbag located in the dashboard above the glove box. Information necessary to safely service the SRS is included in this Service Manual. Items marked with an asterisk (*) on the contents page include, or are located near, SRS components. Servicing, disassembling or replacing these items will require special precautions and tools, and should therefore be done by an authorized Acura dealer.

⚠WARNING

- **To avoid rendering the SRS inoperative, which could lead to personal injury or death in the event of a severe frontal collision, all maintenance must be performed by an authorized Acura dealer.**
- **Improper maintenance, including incorrect removal and installation of the SRS, could lead to personal injury caused by unintentional activation of the airbag (s).**
- **All SRS electrical wiring harnesses are covered with yellow outer insulation. Related components are located in the steering column, center console, dash, and dashboard lower panel, and in the dashboard above the glove box. Do not use electrical test equipment on these circuits.**

NOTE: The radio may have a coded theft protection circuit. Be sure to get the customer's code number before
— Disconnecting the battery.
— Removing the No. 39 (10 A) fuse in the under-hood fuse/relay box.
— Removing the radio.
After service, reconnect power to the radio and turn it on. When the word "CODE" is displayed, enter the customer's 5-digit code to restore radio operation.

Manual Transmission

Special Tools 13-2
Maintenance
  Transmission oil 13-3
Back-up Light Switch
  Replacement 13-3
Transmission Assembly
  Removal 13-4
Gearshift Mechanism
  Overhaul 13-7
Illustrated Index 13-8
Transmission Cover
  Removal 13-10
5th Gear
  Removal 13-11
Transmission Housing
  Removal 13-12
Reverse Shift Holder
  Clearance Inspection 13-14
Change Holder
  Clearance Inspection 13-15
Mainshaft, Countershaft, Assemblies
  Removal 13-17
Mainshaft
  Disassembly 13-18
  Inspection 13-19
  Reassembly/Clearance
  Inspection 13-20
Countershaft
  Disassembly 13-24
  Inspection 13-25
  Reassembly/Clearance
  Inspection 13-26
Mainshaft Bearing (Clutch Housing)
  Replacement 13-29
Countershaft Bearing
(Clutch Housing)
  Replacement 13-30
Mainshaft Oil Seal (Clutch Housing)
  Replacement 13-31
Oil Pump
  Index 13-32
  Clearance Inspection 13-33
Shift Fork
  Clearance Inspection 13-34
Synchro Sleeve, Synchro Hub
  Inspection 13-35
  Installation 13-35
Synchro Ring, Gear
  Inspection 13-36
Secondary Gear Assembly
  Index 13-37
Extension Shaft
  Removal 13-38
Oil Seal (Secondary Gear)
  Replacement 13-38
Tapered Roller Bearing
  Replacement 13-39
Oil Seal
  Removal 13-40
Bearing Outer Race
  Replacement 13-40
Tapered Roller Bearing Preload
  Adjustment 13-42
Oil Seal
  Installation 13-43
Mainshaft, Countershaft Assemblies
  Reassembly 13-44
Transmission Housing
  Reassembly 13-46
  Bearing Installation 13-48
5th Gear
  Installation 13-49
Transmission Cover
  Installation 13-50
Transmission Assembly
  Installation 13-52

Special Tools

Ref. No.	Tool Number	Description	Qty	Page Reference
①	07GAD–SD40101	Attachment, 78 x 90 mm	1	13-41
②	07924–PJ4010A	Mainshaft Holder	1	13-11, 22, 27, 49
③	07LAC–PW50101	Extension Shaft Puller	1	13-5
④	07LAD–PW50500	Pinion Cover Driver Attachment	1	13-43
⑤	07LAD–PW50601	Attachment, 40 x 50 mm	1	13-49, 43
⑥	*07736–A01000A	Adjustable Bearing Puller, 25–40 mm	1	13-29, 30
⑦	07746–0010200	Attachment, 37 x 40 mm	1	13-31
⑧	07746–0010300	Attachment, 42 x 47 mm	1	13-13, 38, 48
⑨	07746–0010400	Attachment, 52 x 55 mm	1	13-29, 30
⑩	07746–0010600	Attachment, 72 x 75 mm	1	13-13, 41, 48
⑪	07749–0010000	Driver	1	13-13, 29, 30, 31, 38, 41, 43, 48
⑫	07965–SD90100	Support Base	1	13-13, 48

*Must be used with commercially avasilable 3/8"-16 Slide Hammer.

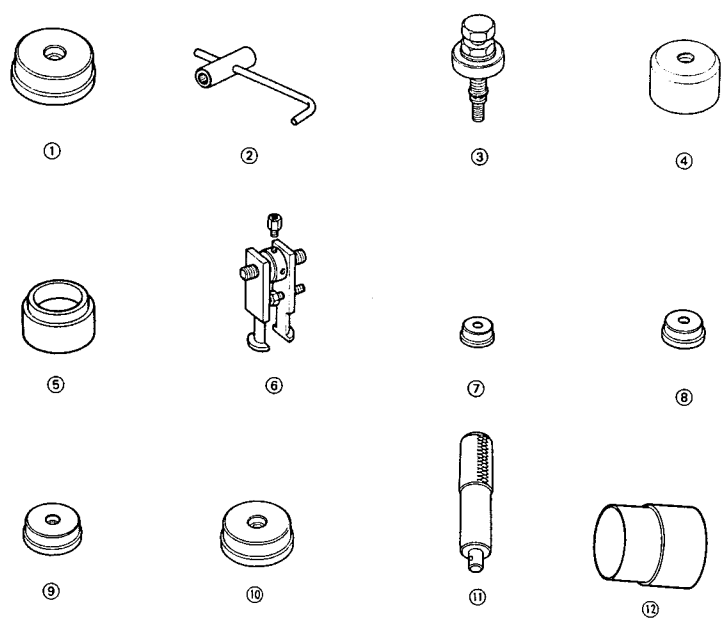

Maintenance

Transmission Oil

NOTE: Check the oil with the engine OFF, and the car on level ground.

1. Remove the oil filler plug, then check the level and condition of the oil.

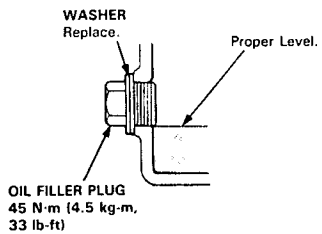

2. The oil level must be up to the fill hole. If it is below the hole, add oil until it runs out, then reinstall the oil filler plug with a new washer.
3. If the transmission oil is dirty, remove the drain plug and drain the oil.
4. Reinstall the drain plug with a new washer, and refill the transmission oil to the proper level.

   NOTE: The drain plug washer should be replaced at every oil change.

5. Reinstall the oil filler plug with a new washer.

   Oil Capacity
   1.8 ℓ (1.9 Us qt, 1.6 Imp qt) at oil change.
   2.0 ℓ (2.1 Us qt, 1.8 Imp qt) at overhaul.

Use only API Service SAE10 W–30 or 10 W–40, SF or SG grade.

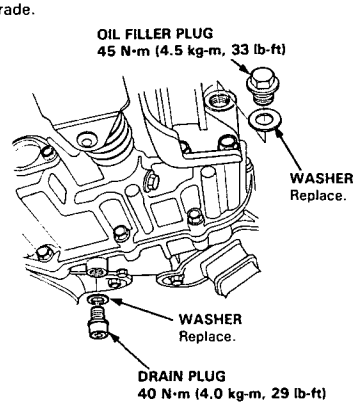

Back-up Light Switch

Replacement

NOTE: To test the back-up light switch, see section 23.

1. Disconnect the connector, then remove the connector from the connector clamp.
2. Remove the back-up light switch.
3. Install a new washer and switch.

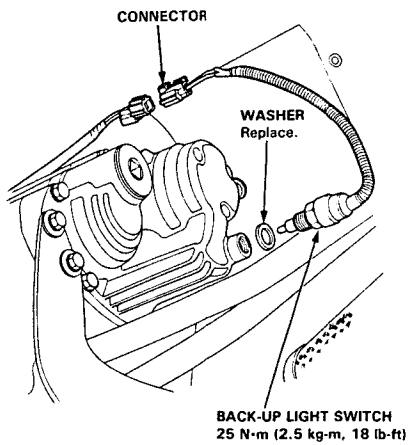

Transmission Assembly

Removal

⚠ WARNING

- **Make sure jacks and safety stands are placed properly, and hoist brackets are attached to correct positions on the engine.**
- **Apply parking brake and block rear wheels so car will not roll off stands and fall on you while working under it.**

CAUTION: Use fender covers to avoid damaging painted surfaces.

NOTE: The radio may have a coded theft protection circuit. Be sure to get the customer's code number before
- Disconnecting the battery.
- Removing the No. 39 (10 A) fuse in the under-hood fuse/relay box
- Removing the radio.

After service, reconnect power to the radio and turn it on. When the word "CODE" is displayed, enter the customer's 5-digit code to restore radio operation.

1. Disconncect the battery negative (−) and positive (+) cables from the battery.
2. Remove the battery and battery base (see section 5).
3. Remove the ABS relay box (see section 5).

   NOTE: Do not disconnect the connector.
4. Remove the heat shield (see section 5).
5. Remove the distributor (see section 23).

   NOTE: Do not disconnect the connector.

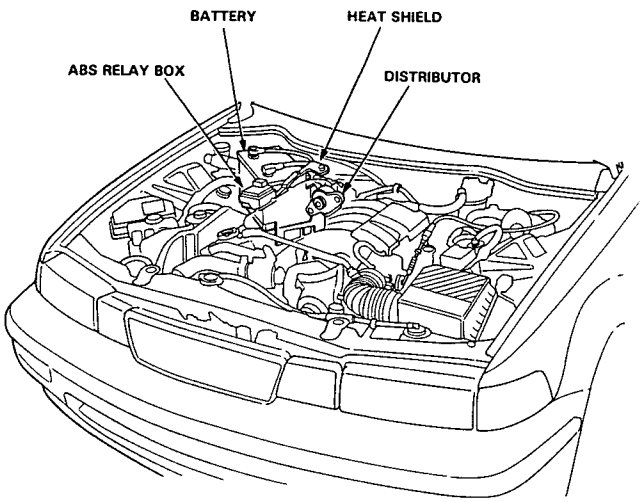

6. Remove the control box.

   NOTE: Do not remove the vacuum tubes from the control box.

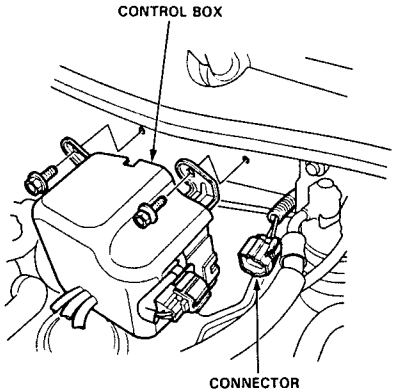

7. Disconnect the transmission ground wire and back-up light switch connector.
8. Remove the slave cylinder.

   NOTE: Do not operate the clutch pedal once the slave cylinder has been removed.
9. Remove the transmission housing mounting bolts and 26 mm shim.

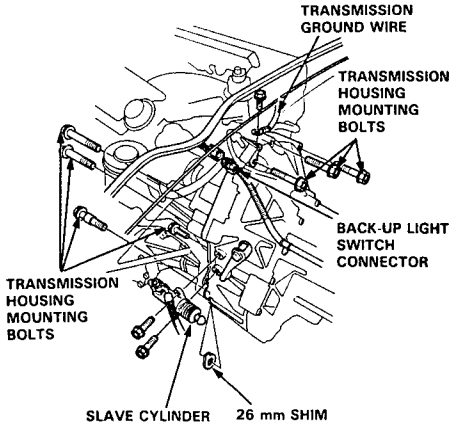

10. Remove the transmission mount beam and transmission mount bracket.

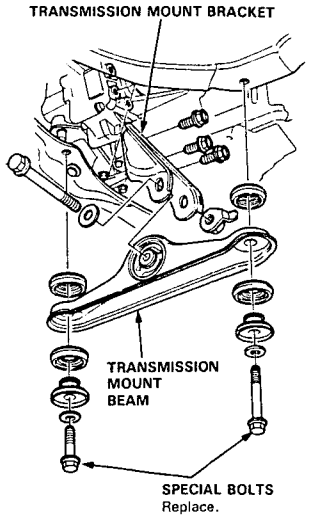

11. Remove the secondary cover and 33 mm sealing bolt.

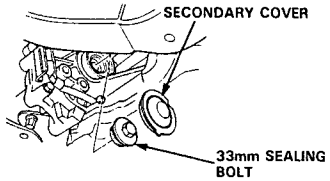

12. Disconnect the extension shaft from the differential using the special tool as shown.

    NOTE: Shift the lever into low gear to lock the secondary gear.

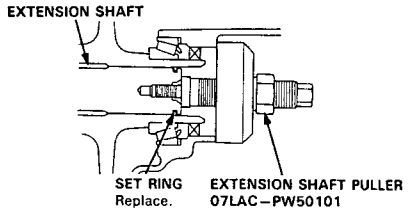

(cont'd)

Transmission Assembly

Removal (cont'd)

13. Remove the exhaust pipe A and exhaust stay.

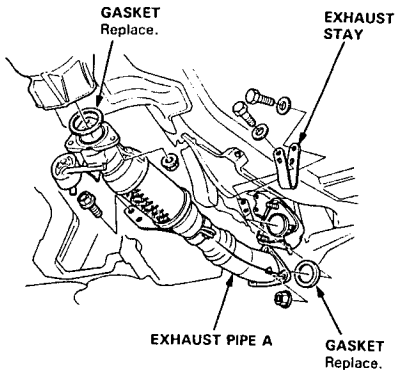

14. Remove the shift rod and extension rod.

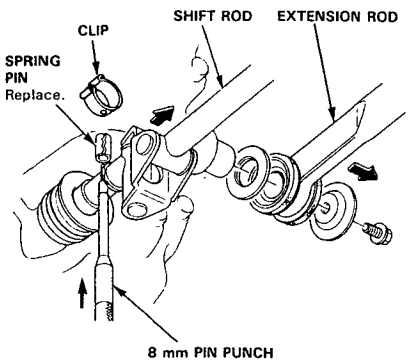

15. Remove the nuts of the transmission mounts.

16. Place a jack under the transmission.

17. Remove the transmission mounts.

18. Remove the transmission housing mounting bolt.

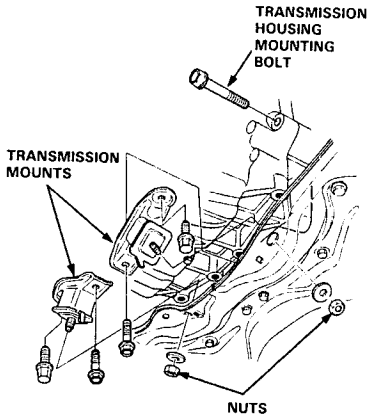

19. Remove the attaching bolt and the clutch cover.

20. Remove the transmission housing mounting bolt.

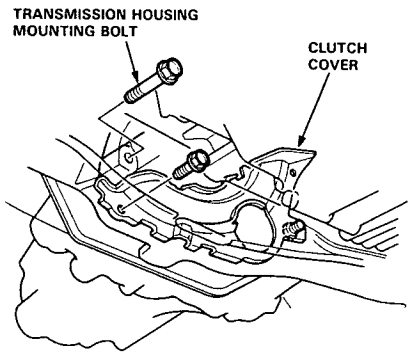

21. Pull the transmission away from the engine until it clears the mainshaft.

Gearshift Mechanism

Overhaul

NOTE:
- Inspect rubber parts for wear and damage when disassembling.
- Install the clip and the spring pin on the change joint as shown.
- Turn the boot so the hole is facing down as shown.
- Make sure the boot is installed on the change joint.

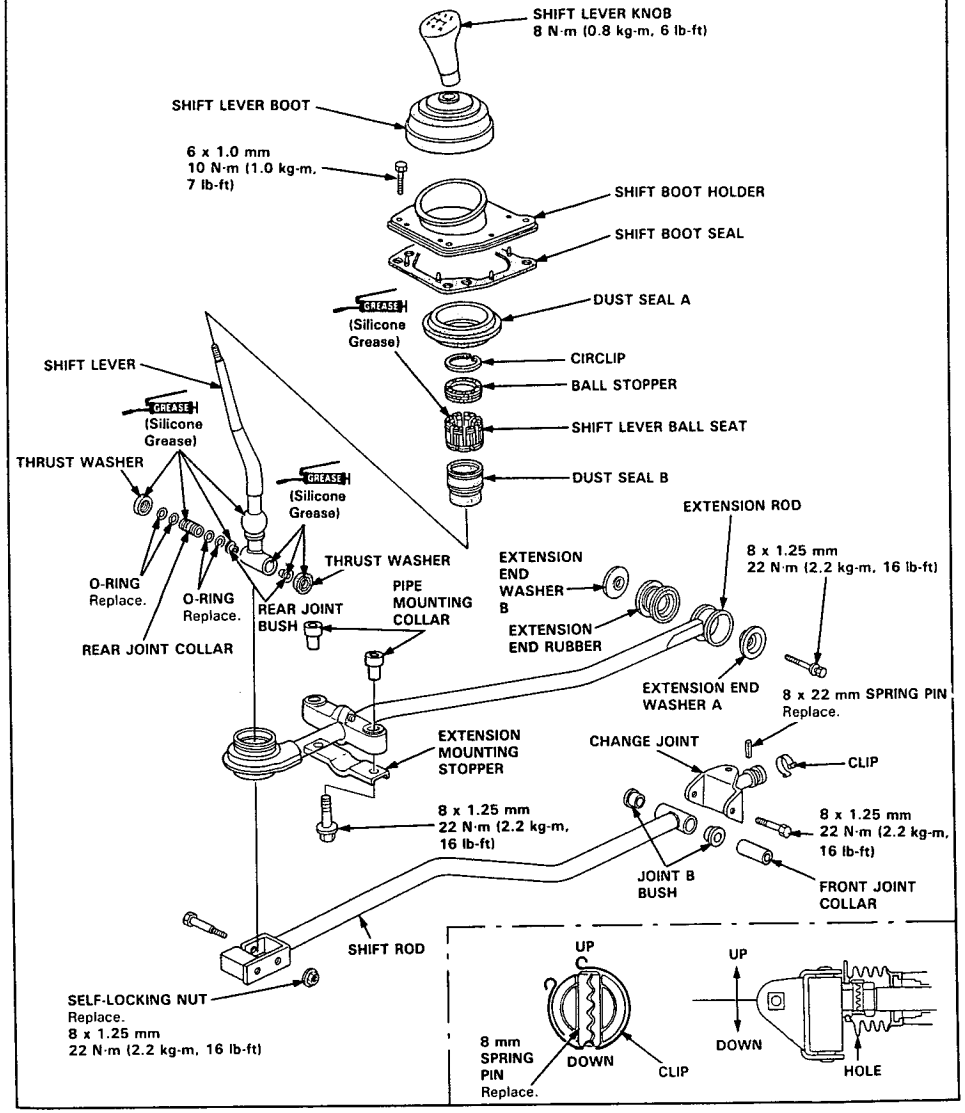

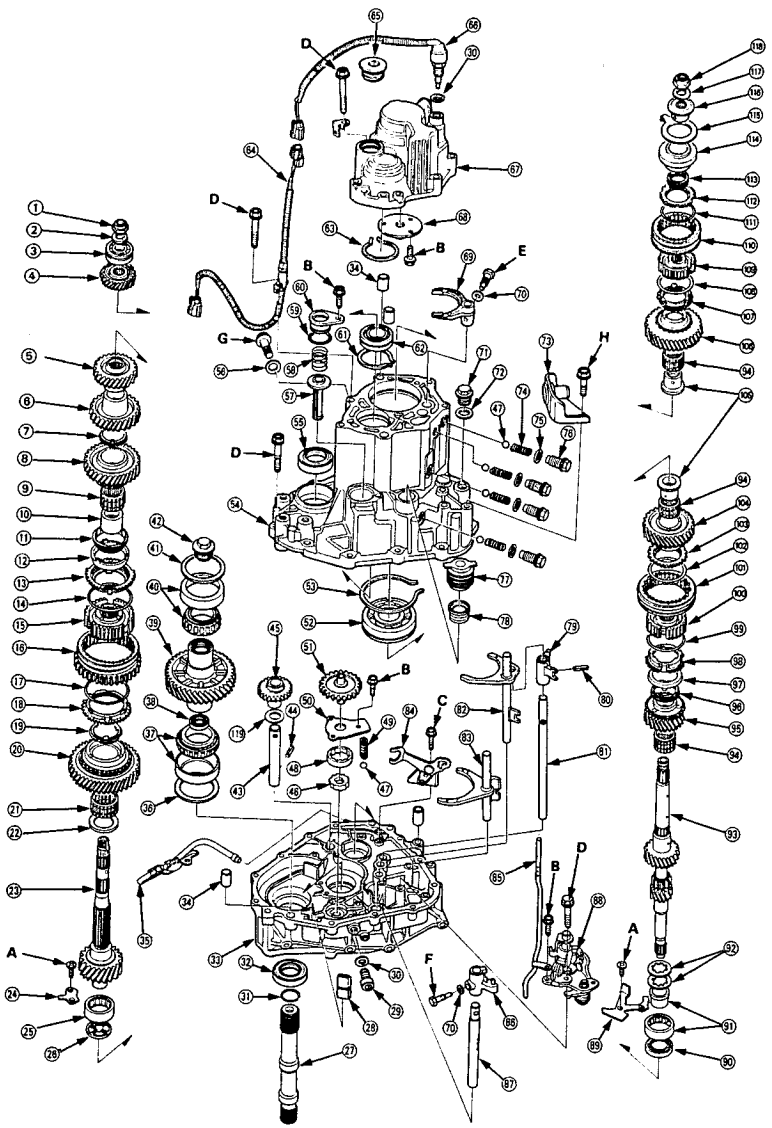

NOTE:
- Always clean the magnet (28) and oil pump strainer (75) whenever the transmission housing is disassembled.
- Inspect the all bearings for wear and operation.

	Torque Value	Bolt Size
A	10 N·m (1.0 kg-m, 7 lb-ft)	6 x1.0 mm
B	12 N·m (1.2 kg-m, 9 lb-ft)	6 x 1.0mm
C	15 N·m (1.5 kg-m, 11 lb-ft)	6 x 1.0mm
D	28 N·m (2.8 kg-m, 21 lb-ft)	8 x 1.25mm
E	30 N·m (3.0 kg-m, 22 lb-ft)	8 x 1.0mm
F	31 N·m (3.1 kg-m, 23 lb-ft)	8 x 1.0mm
G	55 N·m (5.5 kg-m, 40 lb-ft)	10 x 1.25 mm
H	28 N·m (2.8 kg-m, 21 lb-ft)	8 x 1.25 mm

(1) LOCKNUT Replace.
130 → 0 → 130 N·m
(13 → 0 → 13 kg-m,
94 → 0 → 94 lb-ft)
(2) SPRING WASHER
(3) BALL BEARING
(4) 5TH GEAR
(5) 4TH GEAR
(6) 3RD GEAR
(7) FRICTION DAMPER
(8) 2ND GEAR
(9) 41 x 46 x 28 mm NEEDLE BEARING
(10) DISTANCE COLLAR
(11) INNER SYNCHRO RING
(12) SYNCHRO CONE
(13) OUTER SYNCHRO RING
(14) SYNCHRO SPRING
(15) 1ST/2ND SYNCHRO HUB
(16) 1ST/2ND SYNCHRO SLEEVE
(17) SYNCHRO SPRING
(18) SYNCHRO RING
(19) FRICTION DAMPER
(20) 1ST GEAR
(21) 44 x 50 x 29 mm NEEDLE BEARING
(22) THRUST SHIM
Selection, page 13-28
(23) COUNTERSHAFT
(24) NEEDLE SET PLATE C
(25) 33 x 55 x 19 mm NEEDLE BEARING
(26) OIL GUIDE PLATE
(27) EXTENSION SHAFT
(28) MAGNET
(29) DRAIN PLUG
40 N·m (4.0 kg-m, 29 lb-ft)
(30) WASHER Replace.
(31) SET RING Replace.
(32) 49.7 x 70 x 11 mm OIL SEAL Replace.
(33) CLUTCH HOUSING
(34) 14 x 20 mm DOWEL PIN
(35) BREATHER TUBE ASSEMBLY
(36) 80 mm THRUST WASHER
(37) TAPERED ROLLER BEARING
(38) 32.5 x 42 x 7 mm OIL SEAL Replace.
(39) SECONDARY GEAR
(40) TAPERED ROLLER BEARING
(41) 68 mm THRUST SHIM
Selection, page 13-42
(42) 33 mm SEALING BOLT
80 N·m (8.0 kg-m, 58 lb-ft)
(43) REVERSE GEAR SHAFT
(44) SPRING PIN 4 x 8 mm Replace.
(45) REVERSE IDLE GEAR
(46) INNER ROTOR
(47) STEEL BALL D. 5/16 in
(48) OUTER ROTOR
(49) RELIEF VALVE SPRING
L. 19.09 mm (0.75 in)
(50) OIL PUMP PLATE
(51) OIL PUMP SHAFT
(52) 29 x 89 x 24 mm BALL BEARING
(53) 89 mm SNAP RING
(54) TRANSMISSION HOUSING
(55) 39.8 x 56 x 8 mm OIL SEAL Replace.
(56) WASHER Replace.
(57) OIL PUMP STRAINER
(58) STRAINER SET SPRING
L. 37.2 mm (1.46 in)
(59) 29.7 x 2.4 mm O-RING Replace.
(60) STRAINER COVER
(61) 50 mm SNAP RING
(62) 28 x 50 x 21 mm NEEDLE BEARING
(63) 56 mm SNAP RING
(64) BACK-UP LIGHT SWITCH SUB CORD
(65) 36 mm SEALING BOLT
25 N·m (2.5 kg-m, 18 lb-ft)
(66) BACK-UP LIGHT SWITCH
25 N·m (2.5 kg-m, 18 lb-ft)
(67) TRANSMISSION COVER
(68) OIL COLLECT PLATE
(69) 5TH/REVERSE SHIFT FORK
(70) SPRING WASHER
(71) OIL FILLER PLUG
45 N·m (4.5 kg-m, 33 lb-ft)
(72) WASHER Replace.
(73) EXTENSION STAY
(74) SPRING L. 27.9 mm (1.10 in)
(75) WASHER Replace.
(76) SEALING BOLT
(77) SHIFT ROD BOOT
(78) 16 x 27 x 16 mm OIL SEAL Replace.
(79) 5TH/REVERSE SHIFT PIECE
(80) SPRING PIN 5 x 22 mm Replace.
(81) 5TH/REVERSE SHIFT FORK SHAFT
(82) 3RD/4TH SHIFT FORK
(83) 1ST/2ND SHIFT FORK
(84) REVERSE SHIFT HOLDER
(85) OIL GUIDE PIPE
(86) CHANGE PIECE
(87) SHIFT ROD
(88) CHANGE HOLDER
(89) NEEDLE SET PLATE M
(90) 28 x 41 x 7 mm OIL SEAL Replace.
(91) 28 x 53 x 19 mm NEEDLE BEARING
(92) MAINSHAFT WASHER
(93) MAINSHAFT
(94) 36 x 41 x 27 mm NEEDLE BEARING
(95) 3RD GEAR
(96) INNER SYNCHRO RING
(97) SYNCHRO CONE
(98) OUTER SYNCHRO RING
(99) SYNCHRO SPRING
(100) 3RD/4TH SYNCHRO HUB
(101) 3RD/4TH SYNCHRO SLEEVE
(102) SYNCHRO SPRING
(103) SYNCHRO RING
(104) 4TH GEAR
(105) DISTANCE COLLAR
(106) 5TH GEAR
(107) SYNCHRO RING
(108) SYNCHRO SPRING
(109) 5TH/REVERSE SYNCHRO HUB
(110) 5TH/REVERSE SYNCHRO SLEEVE
(111) SYNCHRO SPRING
(112) SYNCHRO RING
(113) 37 x 42 x 15 mm NEEDLE BEARING
(114) TAPERED CONE RING
(115) RING BRAKE STOPPER
(116) DISTANCE COLLAR
(117) SPRING WASHER
(118) LOCKNUT Replace.
150 → 0 → 150 N·m
(15 → 0 → 15 kg-m,
108 → 0 → 108 lb-ft)
(119) WASHER

Transmission Cover

Removal

1. Remove the transmission cover follwoing the numbered sequence.

   NOTE: Loosen the bolts ③ in a crisscross pattern in several steps.

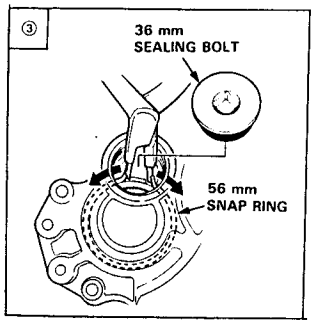

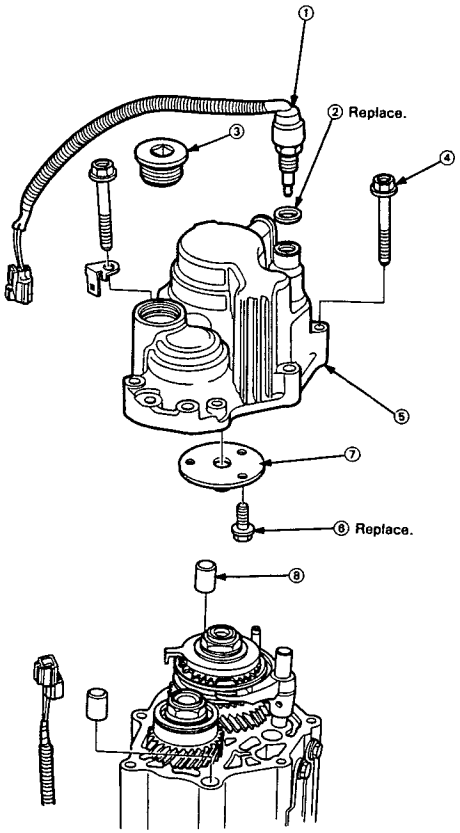

5th Gear

Removal

NOTE:
- Replace all locknuts.
- To check the synchro hub and synchro sleeve, see page 13-35.
- To check the gears, see page 13-36.
- Inspect the bearings for wear and operation.

1. Remove 5th gear following the numbered sequence.

   NOTE: Mainshaft locknut has left-hand threads.

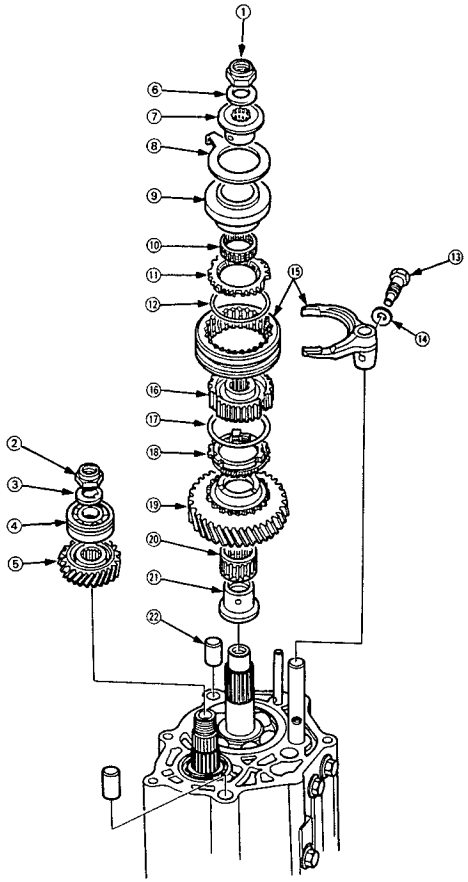

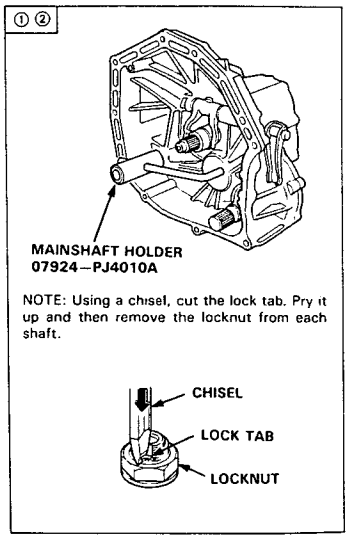

Transmission Housing

Removal

NOTE:
- Replace all sealing washers, O-rings, and oil seals.
- Inspect the bearings for wear and operation.
- The steel ball are all the same size (5/16 in).

1. Remove the transmission housing following the numbered sequence.

   NOTE: Loosen the bolts ⑦ in a crisscross pattern in several steps.

	Free length
A	37.2 mm (1.46 in)
B	27.9 mm (1.10 in)
C	20.4 mm (0.80 in)
D	23.5 mm (0.93 in)

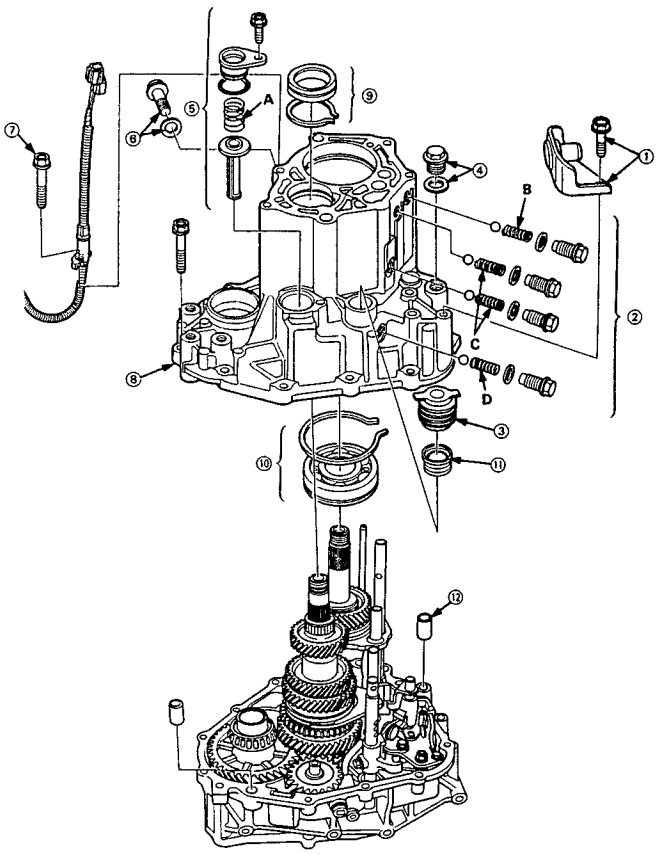

—1. Remove the mainshaft ball bearing using the special tools and a press as shown.

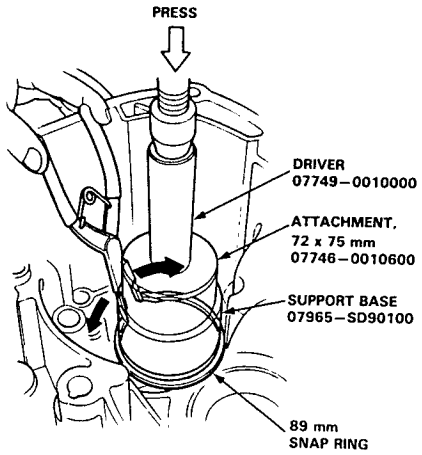

—2. Remove the countershaft needle bearing outer race using the special tools and a press as shown.

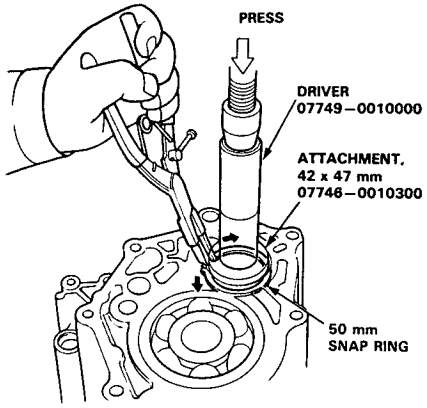

—3. Remove the oil seal.

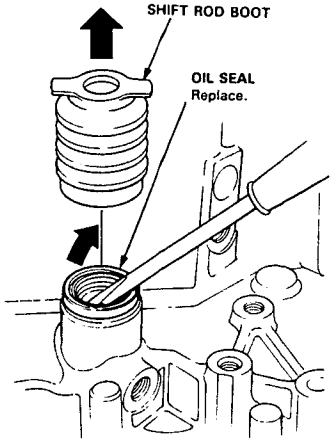

Reverse Shift Holder

Clearance Inspection

1. Measure the clearance between the 5th/reverse shift piece pin and the reverse shift holder.

   Standard: A: 0.05–0.35 mm (0.002–0.014 in)
   B: 0.4–0.8 mm (0.02–0.03 in)

   Service Limit: A: 0.5 mm (0.02 in)
   B: 1.0 mm (0.04 in)

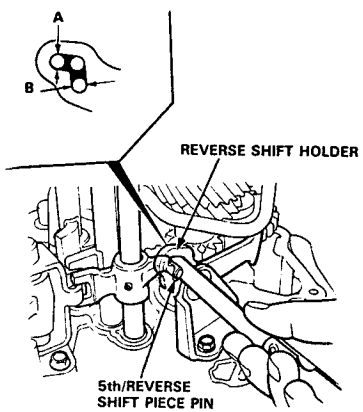

2. If the clearance exceeds the service limit, measure the grooves of the reverse shift holder.

   Standard: A: 7.05–7.25 mm (0.278–0.285 in)
   B: 7.4–7.7 mm (0.29–0.30 in)

   If the grooves exceeds the standard, replace the reverse shift holder.
   If the grooves are within the standard, replace the 5th/reverse shift piece pin.

3. Measure the clearance between the reverse idle gear and the reverse shift holder.

   Standard: 0.5–1.1 mm (0.02–0.04 in)
   Service Limit: 1.7 mm (0.07 in)

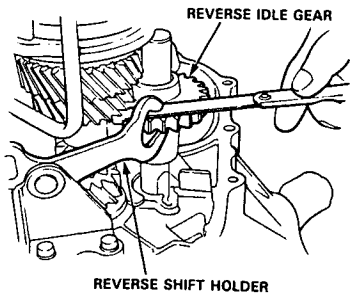

4. If the clearance exceeds the service limit, measure the groove of the reverse shift holder.

   Standard: 14.0–14.3 mm (0.55–0.56 in)

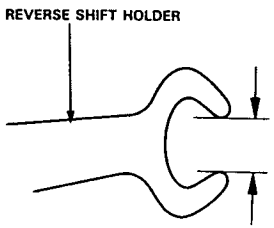

   If the groove exceeds the standard, replcae the reverse shift holder.
   If the groove is within the standard, replcae the reverse idle gear.

Change Holder

Clearance Inspection

1. Measure the clearance between the change piece and the select arm.

   Standard: 0.05–0.35 mm (0.002–0.014 in)
   Service Limit: 0.5 mm (0.02 in)

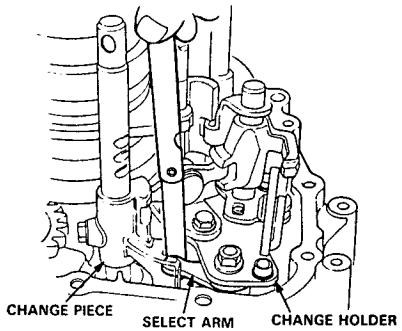

2. If the clearance exceeds the service limit, measure the width of the select arm.

   Standard: 11.8–12.0 mm (0.46–0.47 in)

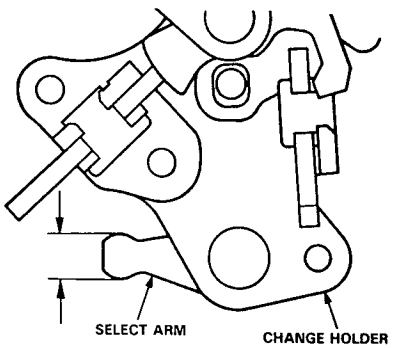

   If the width is less than the standard, replace the change holder.
   If the width is within the standard, replace the change piece.

3. Measure the clearance between the change piece and the shift arm.

   Standard: 0.10–0.40 mm (0.004–0.016 in)
   Service Limit: 0.5 mm (0.02 in)

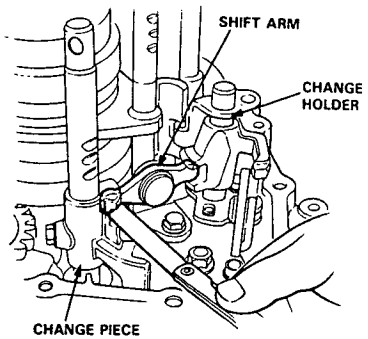

4. If the clearance exceeds the service limit, measure the width of the shift arm.

   Standard: 12.8–13.0 mm (0.50–0.51 in)

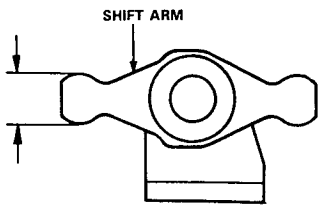

   If the width is less than the standard, replace the change holder.
   If the width is within the standard, replcae the change piece.

(cont'd)

Change Holder

Clearance Inspection (cont'd)

5. Measure the clearance between the shift forks and the shift piece, then measure the clearance between the 5th/reverse shift piece and the shift piece.

   Standard: 0.2–0.5 mm (0.01–0.02 in)
   Service Limit: 0.7 mm (0.03 in)

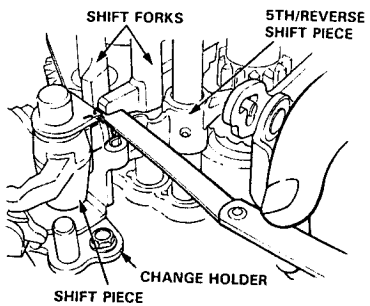

6. If either clearance exceeds the service limit, measure the width of the shift piece.

   Standard: 11.9–12.0 mm (0.469–0.472 in)

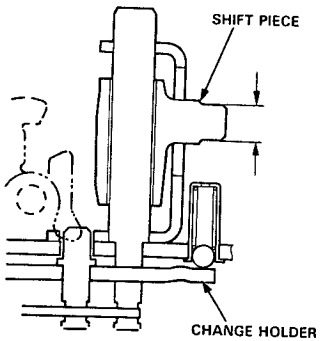

If the width is less than the standard, replace the change holder.
If the width is within the standard, replace the shift forks or the 5th/reverse shift piece as appropriate.

7. Measure the clearance between the shift piece and the shift arm.

   Standard: 0.10–0.40 (0.004–0.016 in)
   Service Limit: 0.6 mm (0.02 in)

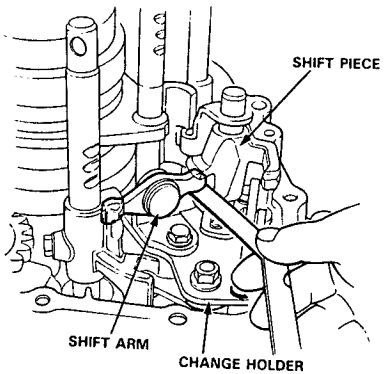

If the clearance exceeds the standard, replace the change holder.

Mainshaft, Countershaft Assemblies

Removal

NOTE:
- Always replace the spring pins when removed.
- Always clean the magnet ⑰.

	Free length
A	19.09 mm (0.75 in)

1. Remove the mainshaft and countershaft assemblies following the numbered sequence.

   NOTE: Remove the reverse idle gear and reverse gear shat ⑥, then shift the 3rd/4th shift fork to the 4th gear side.

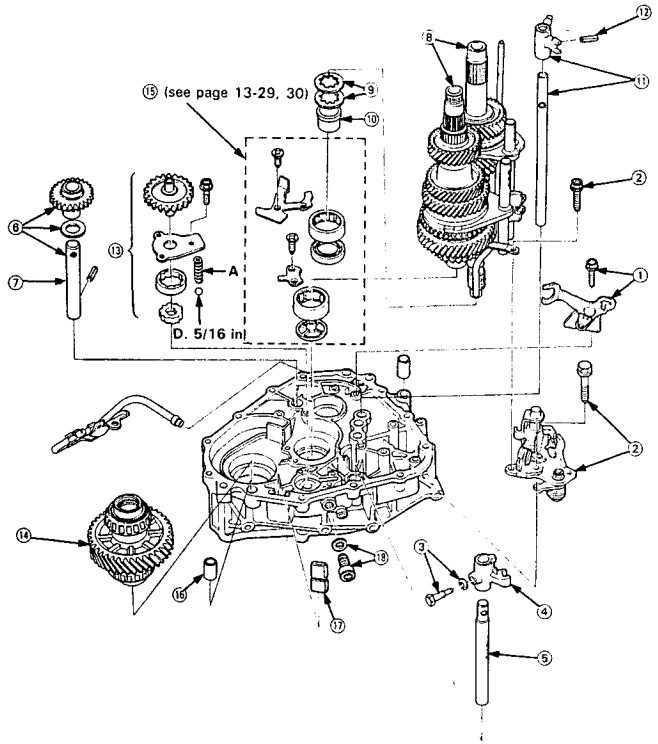

Mainshaft

Disassembly

NOTE: The 3rd/4th synchro hub is installed with a press. Therefore, support 3ed gear on steel blocks and press the mainshaft out of the 3rd/4th synchro hub as shown.

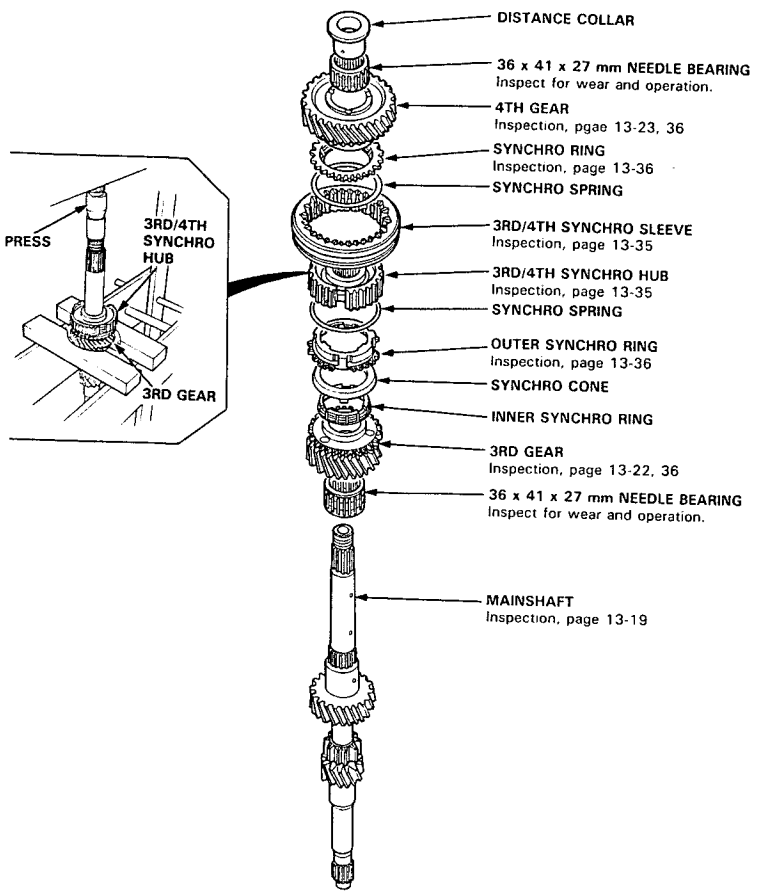

Inspection

1. Inspect the gear and bearing surfaces for wear and damage, then measure the mainshaft at points A, B, and C.

   Standard: A (Needle bearing surface): 27.977–27.990 mm (1.1015–1.1020 in)
   B (Needle bearing surface): 35.984–36.000 mm (1.4167–1.4173 in)
   C (Ball bearing surface): 28.987–29.000 mm (1.1412–1.1417 in)
   Service Limit: A: 27.930 mm (1.0996 in)
   B: 35.930 mm (1.4146 in)
   C: 28.940 mm (1.1394 in)

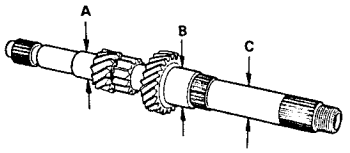

If any part of the mainshaft is less than the service limit, replace it with a new one.

2. Inspect for runout.

   Standard: 0.02 mm (0.001 in) max.
   Service Limit: 0.05 mm (0.002 in)

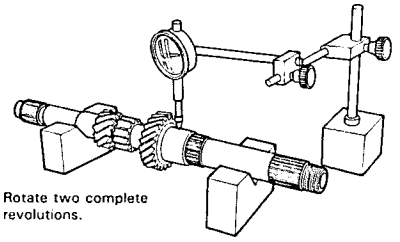

If the runout exceeds the service limit, replace the mainshaft with a new one.

Mainshaft

Reassembly/Clearance Inspection

1. Install the needle bearing and 3rd gear.

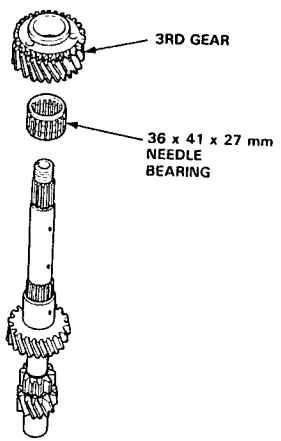

2. Install the inner synchro ring, synchro cone, and outer synchro ring by aligning the grooves with the fingers.

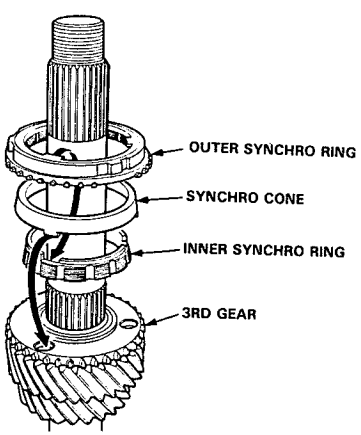

3. Support 2nd gear on steel blocks as shown, then install the 3rd/4th synchro hub using a press as shown.

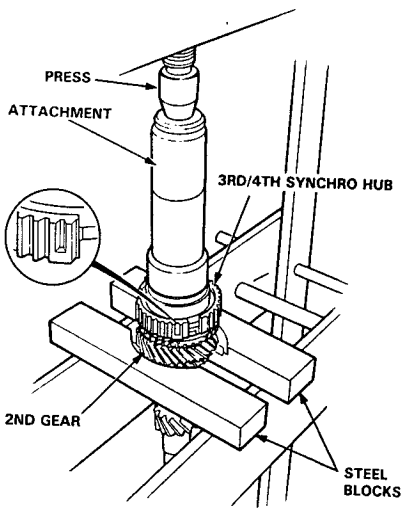

4. Reassemble the mainshaft as shown.

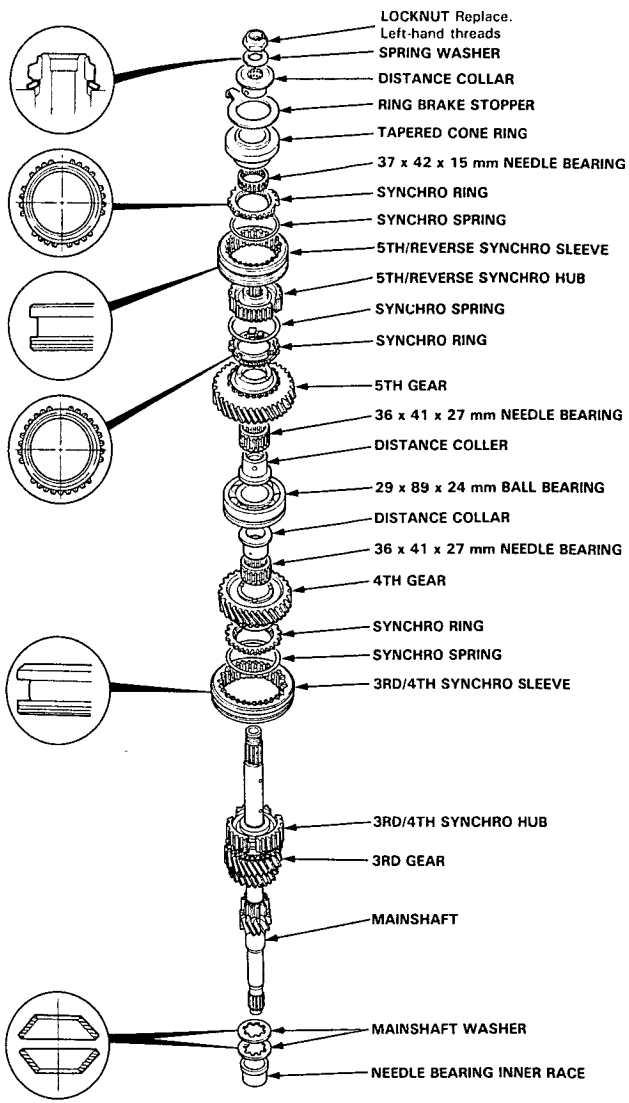

(cont'd)

Mainshaft

Reassembly/Clearance Inspection (cont'd)

5. Install the mainshaft assembly on the clutch housing.

6. Install the special tool, then shift the 1st/2nd synchro sleeve to the 1st gear side.

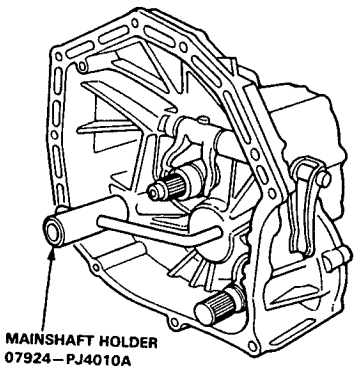

7. Tighten the locknut.

   NOTE: Locknut have left-hand threads.

   LOCKNUT
   150→0→150 N·m
   (15→0→15 kg-m, 108→0→108 lb-ft)

8. Measure the clearance using a feeler gauge as shown.

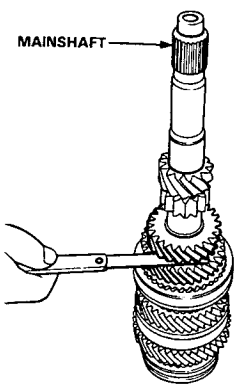

NOTE: If replacement is required, always replace the synchro sleeve set.

–1. Measure the clearance between the 3rd gear and the mainshaft.

Standard: 0.05–0.20 mm (0.002–0.008 in)
Service Limit: 0.3 mm (0.01 in)

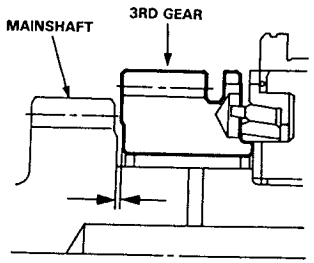

–2. If the clearance exceeds the service limit, measure the thickness of 3rd gear.

Standard: 27.92–27.97 mm (1.099–1.101 in)
Service Limit: 27.85 mm (1.097 in)

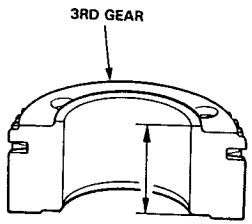

If the thickness is less than the service limit, replace 3rd gear.
If the thickness is more than the service limit, replace the 3rd/4th synchro hub.

–3. Meausre the clearance between the 4th gear and distance collar.

Standard: 0.05–0.17 mm (0.002–0.007 in)
Service Limit: 0.3 mm (0.01 in)

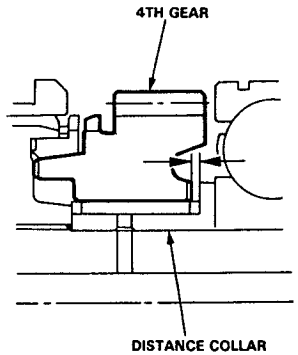

–4. If the clearance exceeds the service limit, measure the thickness of 4th gear.

Standard: 34.92–34.97 mm (1.375–1.377 in)
Service Limit: 34.85 mm (1.372 in)

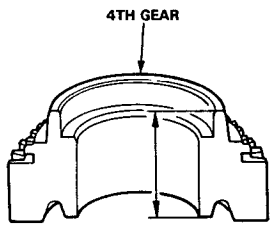

If the thickness is less than the service limit, replace 4th gear.
If the thickness is more than the service limit, replace the 3rd/4th synchro hub.

–5. Measure the clearance between the 5th gear and distance collar.

Standard: 0.05–0.17 mm (0.002–0.007 in)
Service Limit: 0.3 mm (0.01 in)

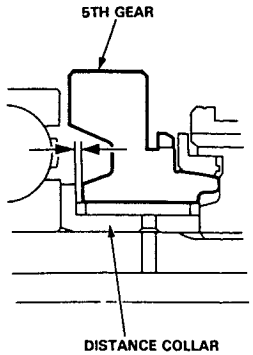

–6. If the clearance exceeds the service limit, measure the thickness of 5th gear.

Standard: 31.42–31.47 mm (1.237–1.239 in)
Service Limit: 31.35 mm (1.234 in)

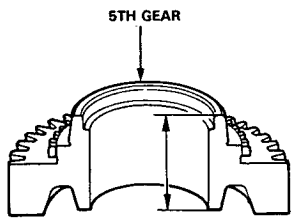

If the thickness is less than the service limit, replace 5th gear.
If the thickness is more than the service limit, replace the 5th/reverse synchro hub.

Countershaft

Disassembly

NOTE: The 4th and 3rd gears are installed with a press. Therefore, remove them as shown.

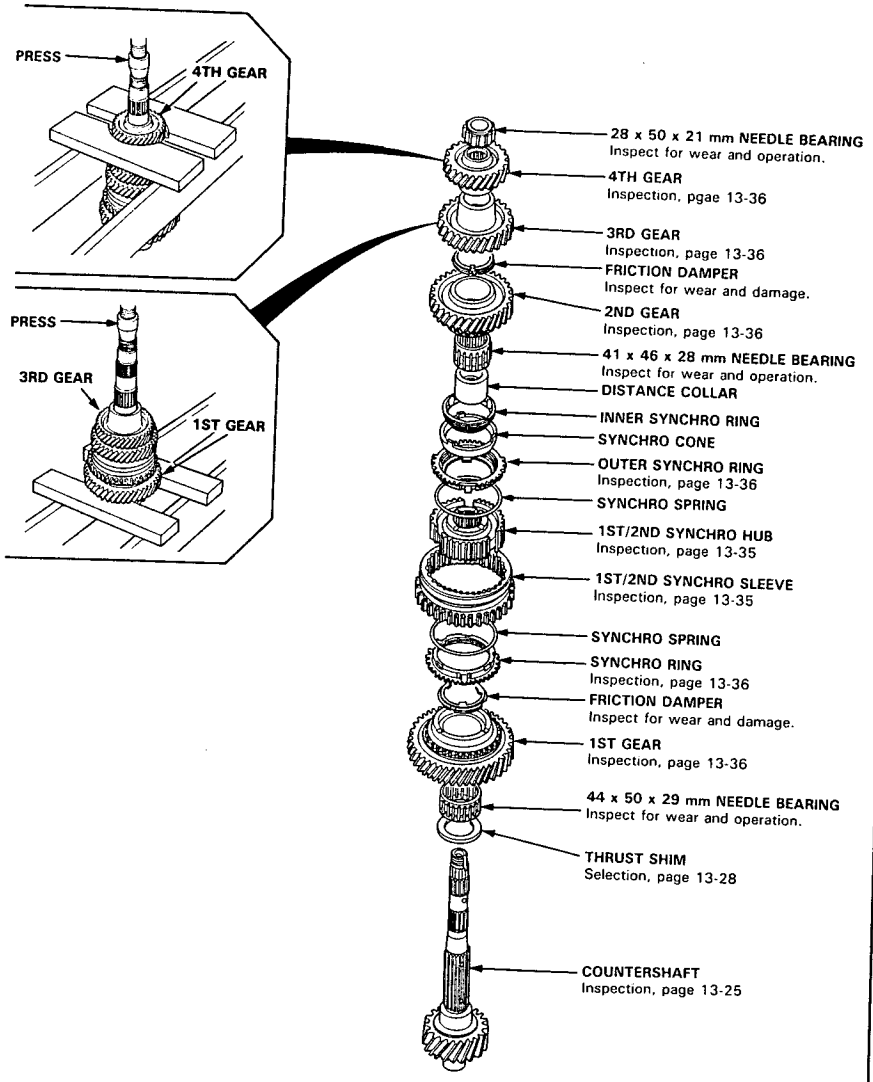

Inspection

1. Inspect the countershaft surface for wear and damage, then measure the countershaft at pints A, B, C, and D.

Standard:
A (Needle bearing surface): 33.000–33.015 mm (1.2992–1.2998 in)
B (Needle bearing surface): 43.984–44.000 mm (1.7317–1.7323 in)
C (Needle bearing surface): 27.977–27.990 mm (1.1015–1.1020 in)
D (Ball bearing surface): 24.980–24.993 mm (0.9835–0.9840 in)

Service Limit:
A: 32.950 mm (1.2972 in)
B: 43.930 mm (1.7295 in)
C: 27.930 mm (1.0996 in)
D: 24.930 mm (0.9815 in)

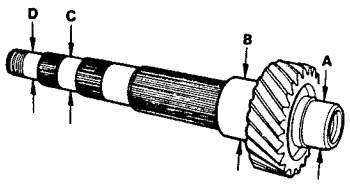

If any part of the countershaft is less than the service limit, replace it with a new one.

2. Inspect for runout.

Standard: 0.02 mm (0.001 in) max.
Service Limit: 0.05 mm (0.002 in)

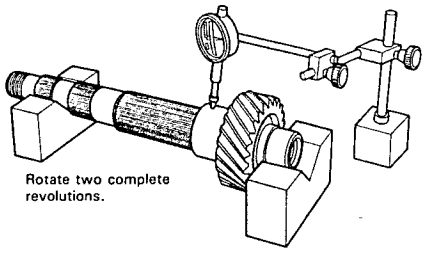

If the runout exceeds the service limit, replace the mainshaft with a new one.

Countershaft

Reassembly/Clearance Inspection

1. Install the thrust shim, needle bearing, 1st gear, friction damper, synchro ring, and synchro spring.

   NOTE: Reassemble the 1st gear and friction damper before installation.

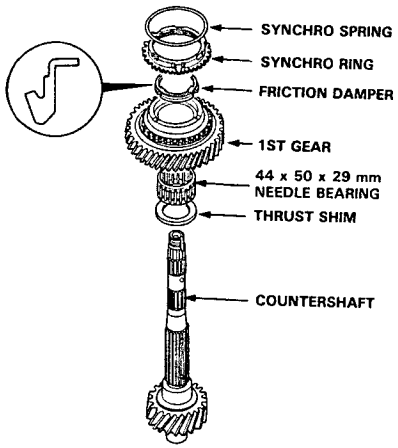

2. Install the 1st/2nd synchro hub by aligning the friction damper fingers with 1st/2nd synchro hub grooves.

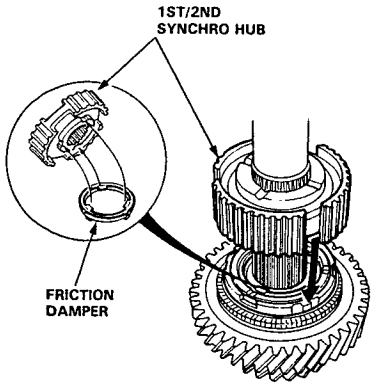

3. Install the 1st/2nd synchro sleeve, synchro spring, outer synchro ring, synchro cone, inner synchro ring, distance collar, and needle bearing.

4. Install the 2nd gear and friction damper.

   NOTE: Reassemble the 2nd gear and firction damper before installation.

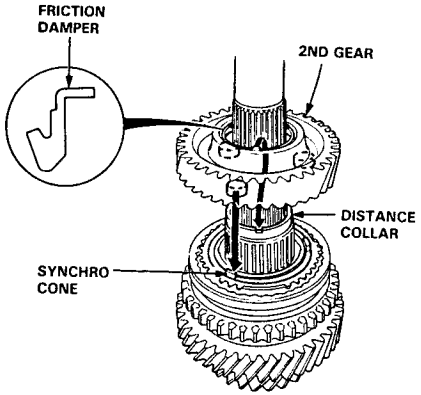

5. Support the countershaft on a steel block as shown, and install 3rd gear using a press.

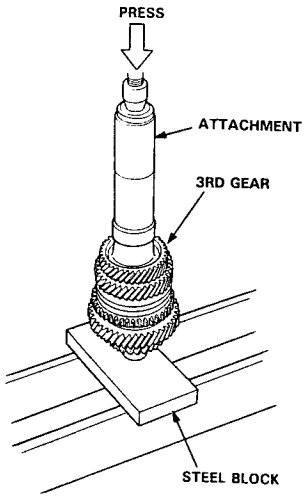

6. Install 4th gear using a press as shown.

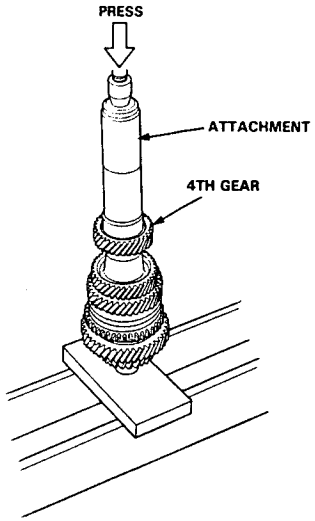

7. Install the needle bearing, spring washer, and locknut.

8. Install the mainshaft and cuntershaft assembly on the clutch housing.

9. Install the special tool, them shift the 1st/2nd cynchro sleeve to the 1st gear side.

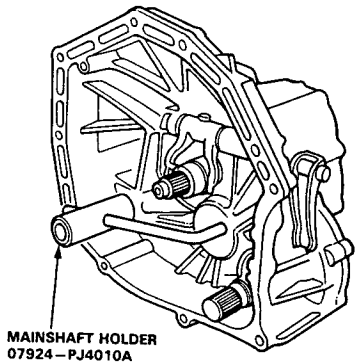

10. Tighten the locknut.

    LOCKNUT
    130→0→130 N·m
    (13→0→13 kg-m, 94→0→94 lb-ft)

11. Measure the clearance as shown.

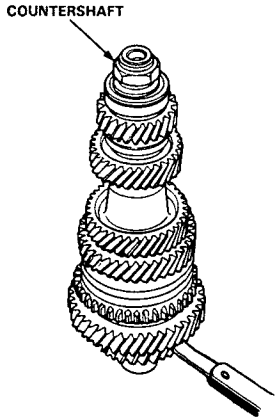

(cont'd)

Countershaft

Reassembly/Clearance Inspection (cont'd)

12. Measure the clearance between the 1st gear and thrust shim.

    Standard: 0.05–0.11 mm (0.002–0.004 in)

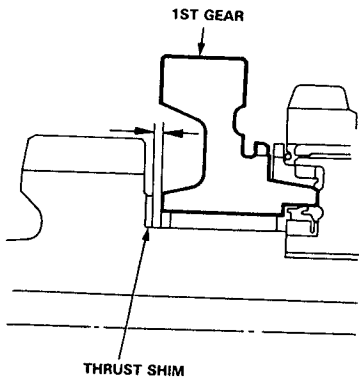

13. If the clearance exceeds the standard, select the appropriate thrust shim for the correct clearance from the chart below.

THRUST SHIM

	Part Number	Thickness
A	23921–PW5–000	1.95–1.97 mm (0.0768–0.0776 in)
B	23922–PW5–000	1.98–2.00 mm (0.0780–0.0787 in)
C	23923–PW5–000	2.01–2.03 mm (0.0791–0.0799 in)
D	23924–PW5–000	2.04–2.06 mm (0.0803–0.0811 in)
E	23925–PW5–000	2.07–2.09 mm (0.0815–0.0823 in)
F	23926–PW5–000	2.10–2.12 mm (0.0827–0.0835 in)

If the clearance exceeds the standard when using the thickest shim, replace the 1st gear.

14. Measure the clearance between 2nd gear and 3rd gear.

    Standard: 0.06–0.135 mm (0.002–0.005 in)
    Service Limit: 0.3 mm (0.01 in)

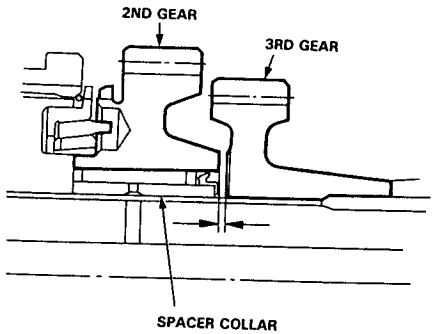

15. If the clearance exceeds the service limit, measure the thickness of 2nd gear.

    Standard: 33.92–33.97 mm (1.335–1.337 in)
    Service Limit: 33.85 mm (1.333 in)

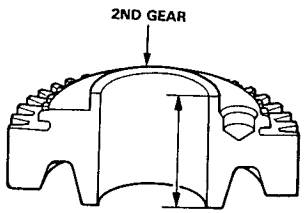

If the thickness is less than the service limit, replace 2nd gear.
If the thickness is more than the service limit, replace the 1st/2nd synchro hub.

NOTE: If replacement is required, always replace the synchro sleeve set.

Mainshaft Bearing (Clutch Housing)

Replacement

NOTE: If replacement is required, always replece the bearing and inner race as an assembly.

1. Remove the needle set plate M.

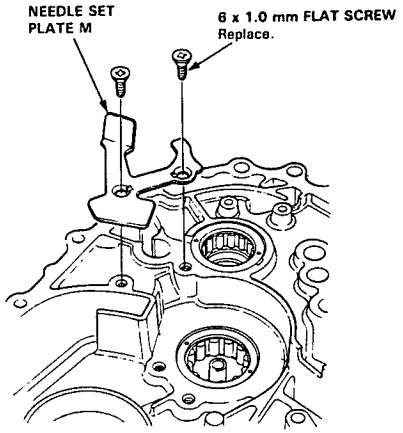

2. Remove the needle bearing using the special tool.

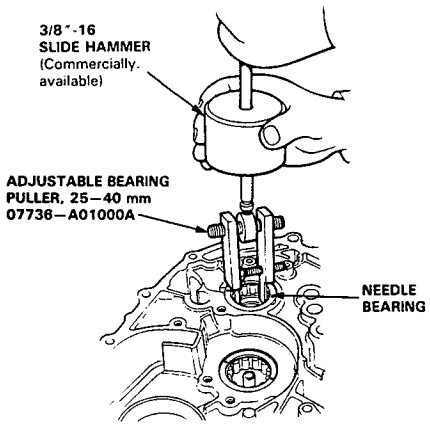

3. Position the new needle bearing in the bore of the clutch housing.

   NOTE: Position the needle bearing with the oil hole facing up.

4. Drive the needle bearing using the special tools as shown.

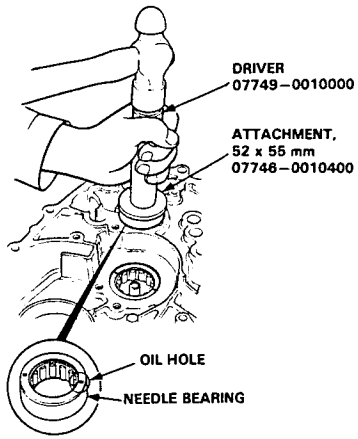

5. Install the needle set plate M, and stake the screw heads in the groove in the needle set plate M.

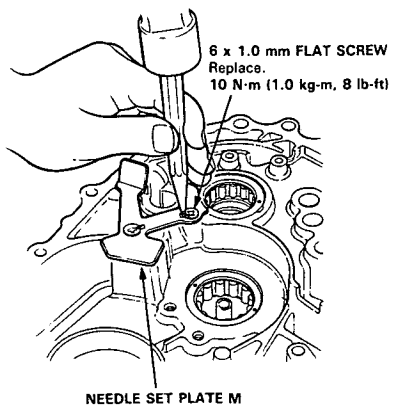

Countershaft Bearing (Clutch Housing)

Replacement

1. Remove the needle set plate C.

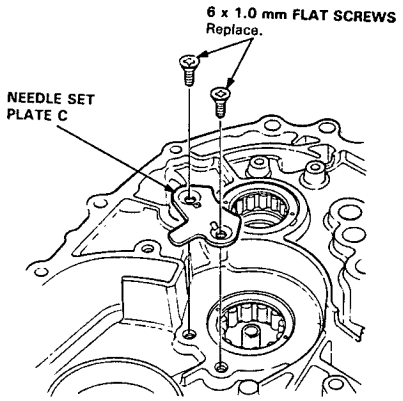

2. Remove the needle bearing using the special tool.

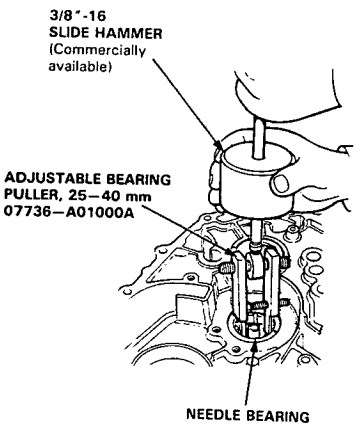

3. Position the new needel bearing in the bore of the clutch housing.

   NOTE: Position the needle bearing with the oil hole facing up.

4. Drive the needle bearing using the special tools as shown.

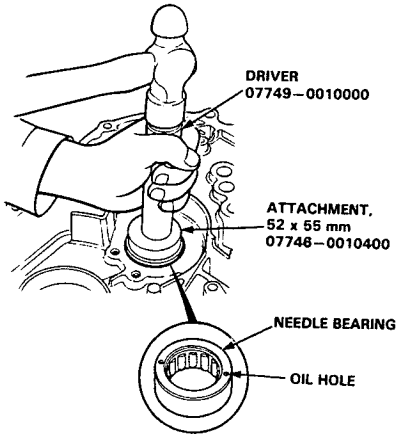

5. Install the needle set plate C, and stake the screw heads in the groove in the needle set plate C.

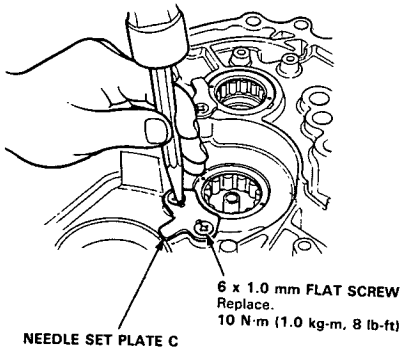

Mainshaft Oil Seal (Clutch Housing)

Replacement

1. Remove the oil seal.

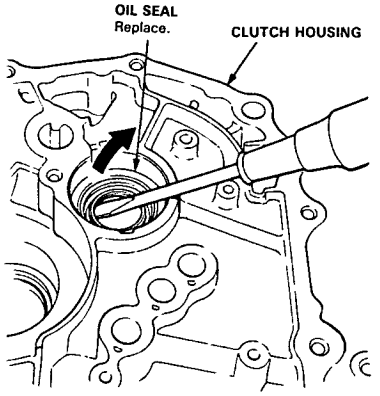

2. Drive a new oil seal using the special tools as shown.

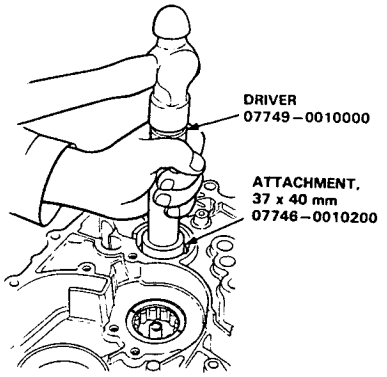

Oil Pump

Index

NOTE: Prior to reassembling, clean all the parts in solvent, dry them and apply lubricant to any contact surfaces.

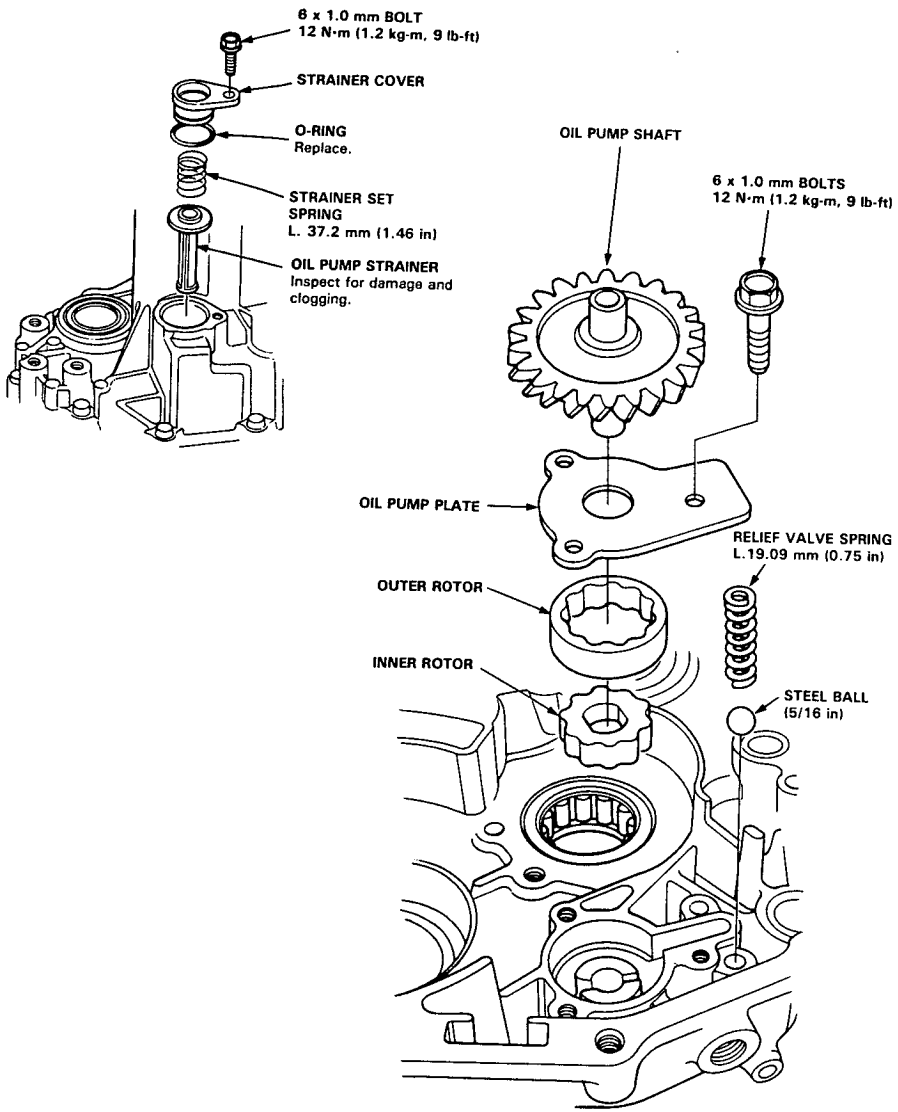

Clearance Inspection

1. Check the clearance on the oil pump rotor as shown.

   Clutch Housing-to-Outer Rotor Clearance
   Standard: 0.1–0.2 mm (0.004–0.008 in)
   Service Limit: 0.22 mm (0.009 in)

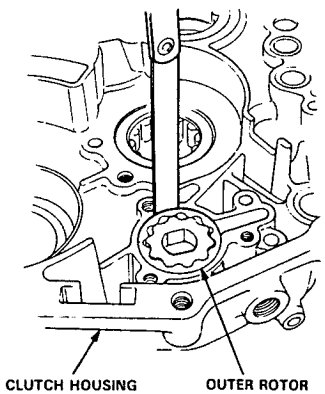

2. Check the clearance on the oil pump rotor as shown.

   Inner Rotor-to-Outer Rotor Tip Clearance
   Standard: 0.14 mm (0.006 in) max.
   Service Limit: 0.20 mm (0.008 in)

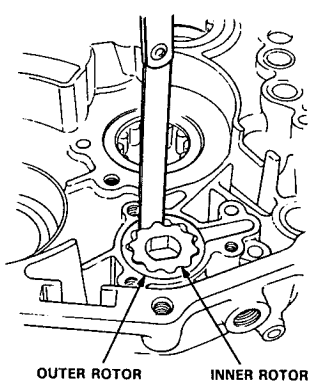

3. Check the clearance between the clutch housing and the oil pump rotor as shown.

   Clutch Housing-to-Rotor Axial Clearance
   Standard: 0.03–0.15 mm (0.001–0.006 in)
   Service Limit: 0.20 mm (0.008 in)

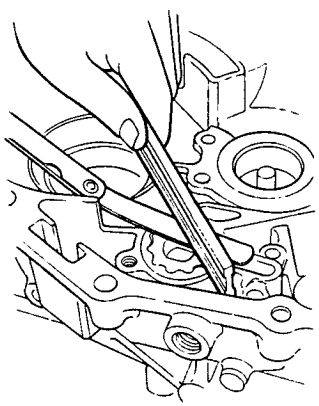

Shift Fork

Clearance Inspection

NOTE: If replacement is required, replace the synchro sleeve set.

1. Check the clearance between each shift fork and its matching synchro sleeve.

   Standard: 0.35–0.65 mm (0.014–0.026 in)
   Service Limit: 1.0 mm (0.04 in)

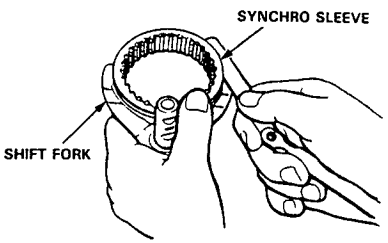

2. If the clearance exceeds the service limit, measure the thickness of the shift fork fingers.

   Standard:
   1st/2nd and 3rd/4th Shift Forks: 7.4–7.6 mm (0.29–0.30 in)

   5th/reverse Shift Fork: 7.4–7.5 mm (0.29–0.30 in)

If the thickness is less than the standard, replace the shift fork.
If the thickness is within the standard, replace the synchro sleeve set.

Synchro Sleeve, Synchro Hub

Inspection

1. Inspect gear teeth on all synchro hubs and synchro sleeves for rounded off corners, which indicates wear.

2. Install each synchro hub in its mating synchro sleeve and check for freedom of movement.

   NOTE: If replacement is required, always replace the synchro sleeve set.

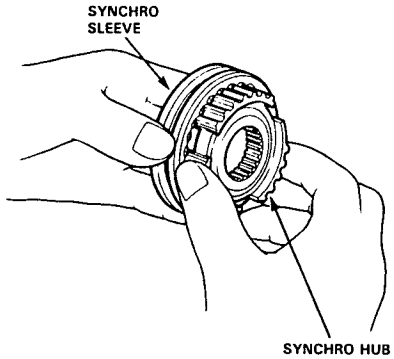

Installation

When assembling the synchro sleeve and synchro hub, be sure to match the three sets of longer teeth (120 degrees apart) on the synchro sleeve with the three sets of deeper grooves in the synchro hub.

CAUTION: Do not install the synchro sleeve with its longer teeth in the 1st/2nd synchro hub slots, because it will damage the spring ring.

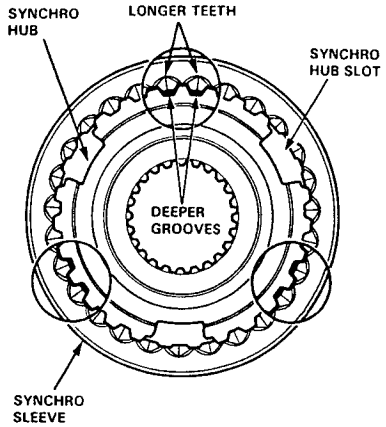

Synchro Ring, Gear

Inspection

1. Inspect the synchro ring and gear.

   A : Inspect the inside of the synchro ring for wear.

   B : Inspect the synchro sleeve teeth and matching teeth on the synchro ring for wear (rounded off).

   GOOD WORN

   C : Inspect the synchro sleeve teeth and matching teeth on the gear for wear (rounded off).

   GOOD WORN

   D : Inspect the gear hub thrust surface for wear.

   E : Inspect the cone surface for wear or roughness.

   F : Inspect the teeth on all gears for uneven wear, scoring, galling cracks.

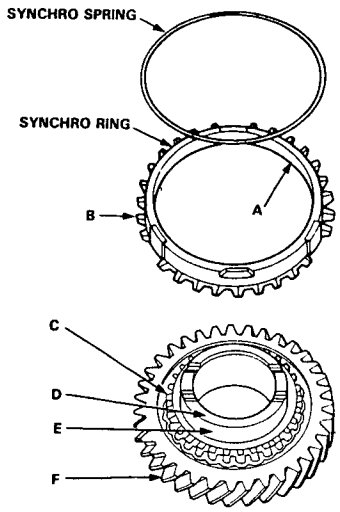

2. Coat the cone surface of the gear with oil and place the synchro ring on the matching gear. Rotate the synchro ring, making sure that it does not slip.

   Measure the clearance between the synchro ring and gear all the way around.

   NOTE: Hold the synchro ring against the gear evenly while measuring the clearance.

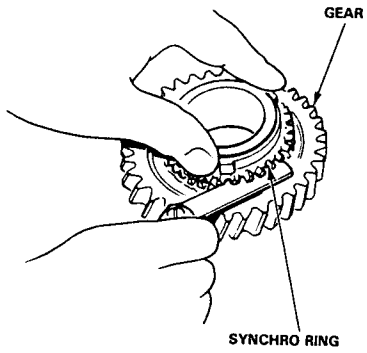

   Synchro Ring-to-Gear Clearance
   Standard: 0.85–1.10 mm (0.034–0.043 in)
   Service Limit: 0.4 mm (0.02 in)

   Double Cone Synchro-to-Gear Clearance
   Standard:
   Ⓐ: (Outer Synchro Ring to Synchro Cone) 0.5–1.0 mm (0.02–0.04 in)
   Ⓑ: (Synchro Cone to Gear) 0.5–1.0 mm (0.02–0.04 in)
   Ⓒ: (Outer Synchro Ring to Gear) 0.95–1.68 mm (0.037–0.066 in)

   Service Limit:
   Ⓐ: 0.3 mm (0.01 in)
   Ⓑ: 0.3 mm (0.01 in)
   Ⓒ: 0.6 mm (0.02 in)

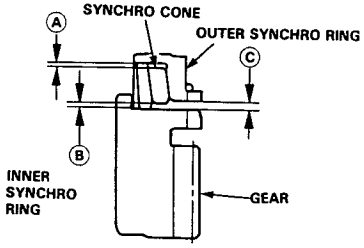

   If the clearance is less than the service limit, replace the synchro ring and synchro cone.

3. Separate the synchro ring and gear, then coat them with oil.

4. Install the synchro spring on the syncrho ring, then set it aside for later reassembly.

Secondary Gear Assembly

Index

NOTE: If the parts marked * are replaced, the bearing preload must be adjusted (see page 13-42).

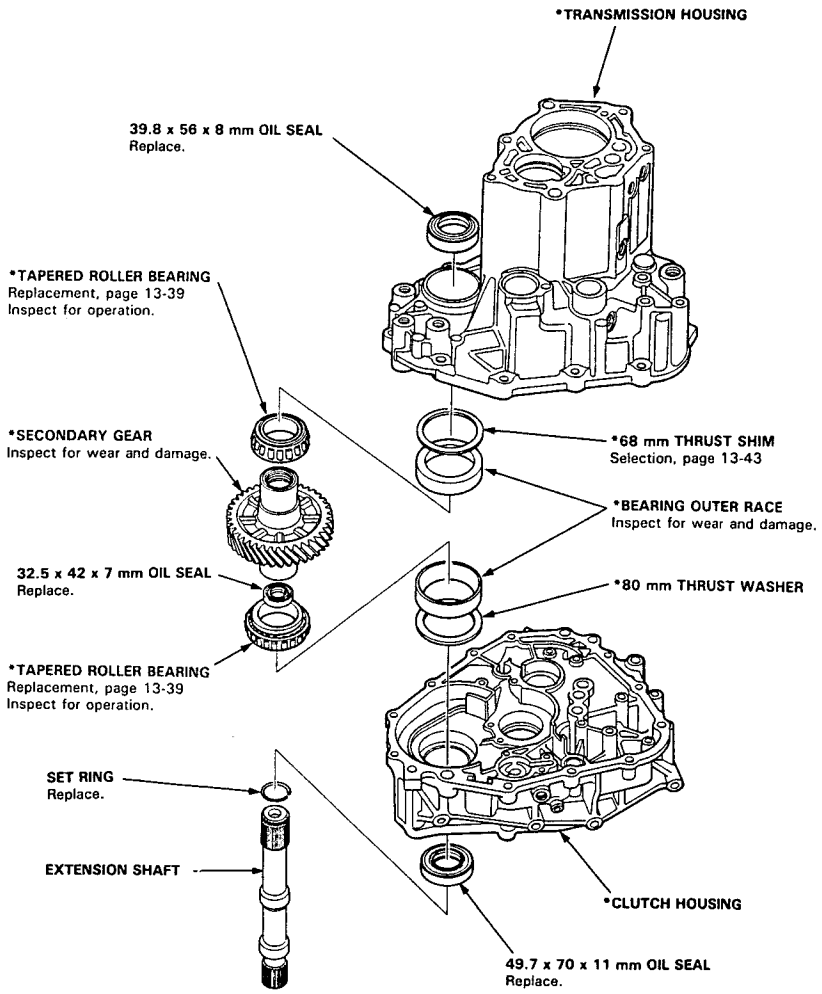

Extension Shaft

Removal

1. Remove the set ring, then remove the extension shaft from the secondary gear.

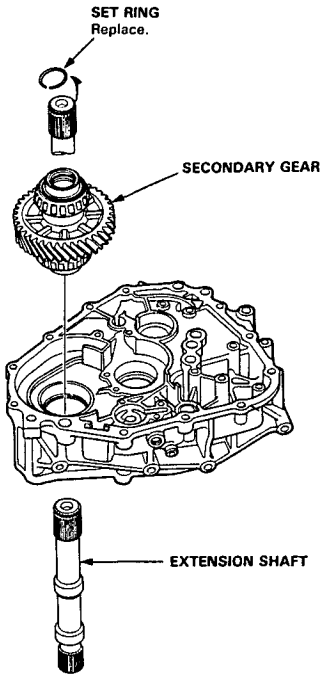

Oil Seal (Secondary Gear)

Replacement

1. Remove the oil seal.

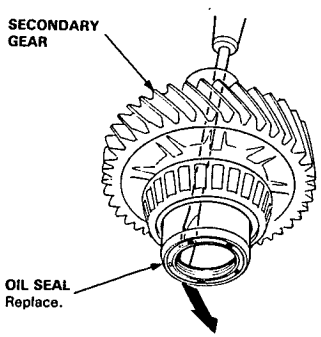

2. Install the oil seal in the secondary gear using the special tools as shown.

   NOTE: Drive the oil seal until the secondary gear surface end.

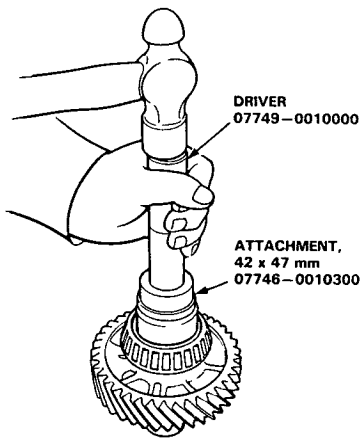

Tapered Roller Bearing

Replacement

NOTE:
- The tapered roller bearing and bearing outer race should be replaced as a set.
- Inspect and adjust the tapered roller bearing preload whenever the tapered roller bearing is replaced (see page 13-42).

1. Remove the tapered roller bearing using a press and bearing separator as shown.

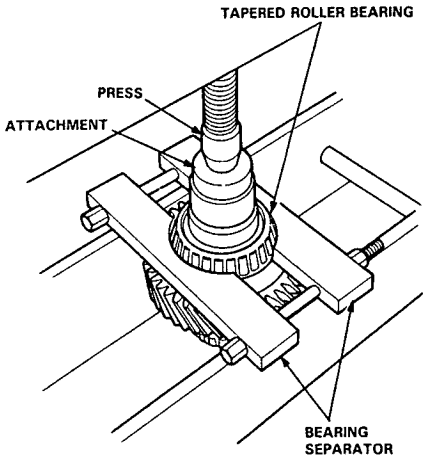

2. Install the tapered roller bearings using the special tool and a press as shown.

   NOTE: Press the tapered roller bearings squarely until they bottom against the case.

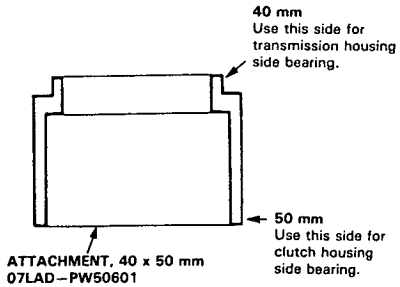

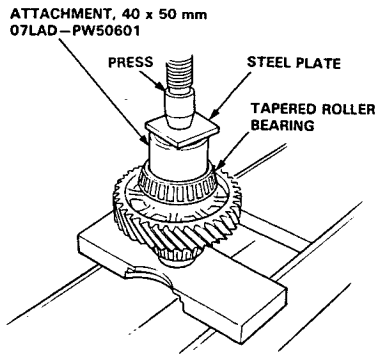

Oil Seal

Removal

Transmission Housing Side:

1. Remove the oil seal from the transmission housing.

   NOTE: For oil seal installation, see page 13-43.

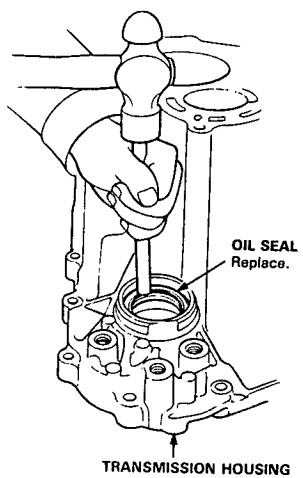

Clutch Housing Side:

1. Remove the oil seal from the clutch housing.

   NOTE: For oil seal installation, see page 13-43.

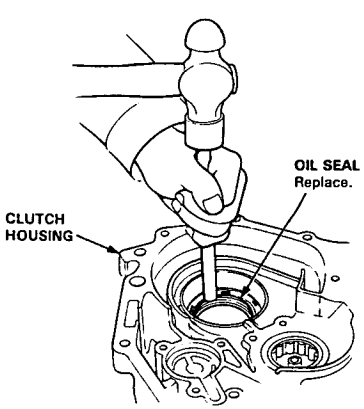

Bearing Outer Race

Replacement

NOTE:
- The tapered roller bearing and bearing outer race should be replaced as a set.
- If the tapered roller bearings, 68 mm thrust shim and/or 80 mm thrust washer are replaced, inspect and adjust the tapered roller bearing preload (see page 13-42).

1. Remove the bearing outer race by heating the housings to 212°F (100°C) with a heat gun, then tap the housing until the bearing outer race falls out.

   CAUTION: Do not heat the housings in excess of 212°F (100°C).

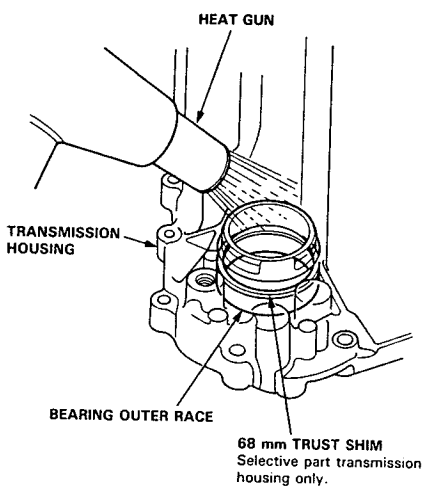

2. Install the 68 mm thrust shim and bearing outer race.

3. Drive the bearing outer race into the transmission housing using the special tools as shown.

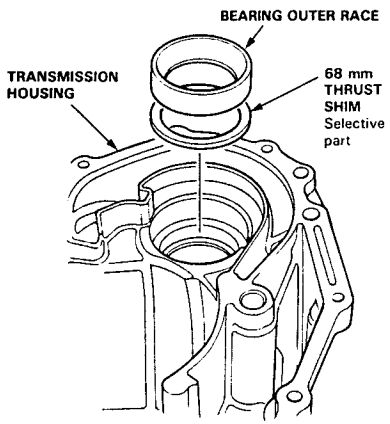

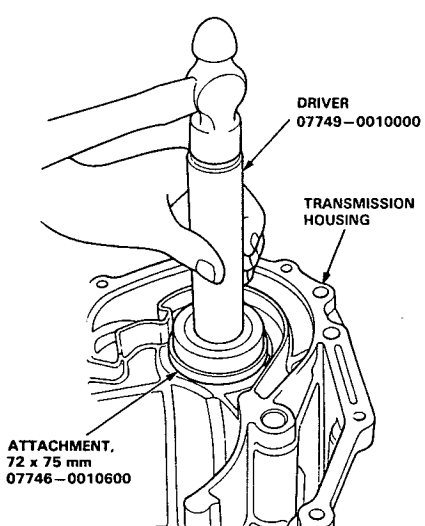

4. Install the 80 mm thrust washer and bearing outer race.

5. Drive the bearing outer race into the clutch housing using the special tools as shown.

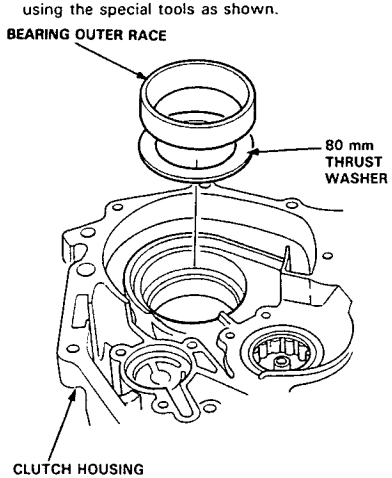

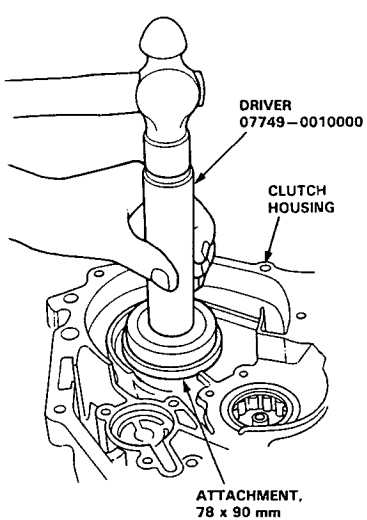

Tapered Roller Bearing Preload

Adjustment

NOTE: If any of the items listed below are replaced, the tapered roller bearing preload must be adjusted.
- TRANSMISSION HOUSING
- CLUTCH HOUSING
- SECONDARY GEAR
- TAPERED ROLLER BEARING and BEARING OUTER RACE
- 68 mm THRUST SHIM
- 80 mm THRUST WASHER

1. Install the secondary gear assembly in the clutch housing, then install the transmission housing.

   NOTE:
   - Do not install the mainshaft, countershaft and reverse idle gear shaft assembly.
   - Tighten the bolts in a crisscross pattern in several steps.

2. Install the 33 mm sealing bolt on the secondary gear assembly.

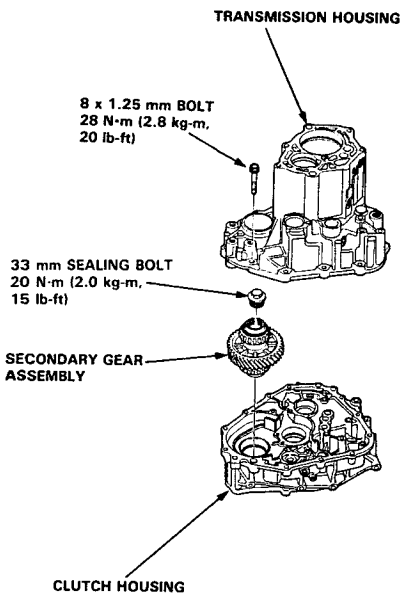

3. Rotate the secondary gear assembly in both directions to seat the bearings.

4. Measure the starting torque of the secondary gear assembly using a torque wrench.

   NOTE: Measure the tapered roller bearing preload at normal room temperature in both directions.

   Standard: 1.8–3.0 N·m (18–30 kg-cm, 16–26 lb-in)

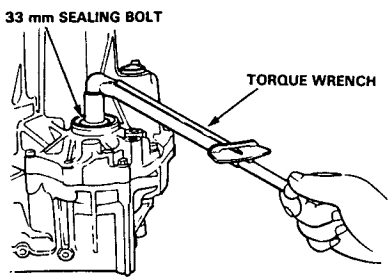

5. If the tapered roller bearing preload is not within the standard, select the 68 mm thrust shim from the following table that will give you the correct preload and recheck.

   NOTE: Changing one of the 68 mm thrust shims to the next size will increase or decrease preload about 0.4–0.5 N·m (4–5 kg-cm, 3.47–4.34 lb-in).

68 mm THRUST SHIM

	Part Number	Thickness
A	23941–PW5–000	1.56 mm (0.0614 in)
B	23942–PW5–000	1.59 mm (0.0626 in)
C	23943–PW5–000	1.62 mm (0.0638 in)
D	23944–PW5–000	1.65 mm (0.0650 in)
E	23945–PW5–000	1.68 mm (0.0661 in)
F	23946–PW5–000	1.71 mm (0.0673 in)
G	23947–PW5–000	1.74 mm (0.0685 in)
H	23948–PW5–000	1.77 mm (0.0697 in)
I	23949–PW5–000	1.80 mm (0.0709 in)
J	23950–PW5–000	1.83 mm (0.0720 in)
K	23951–PW5–000	1.86 mm (0.0732 in)
L	23952–PW5–000	1.89 mm (0.0744 in)
M	23953–PW5–000	1.92 mm (0.0756 in)
N	23954–PW5–000	1.95 mm (0.0768 in)
O	23955–PW5–000	1.98 mm (0.0780 in)
P	23956–PW5–000	2.01 mm (0.0791 in)
Q	23957–PW5–000	2.04 mm (0.0803 in)
R	23958–PW5–000	2.07 mm (0.0815 in)
S	23959–PW5–000	2.10 mm (0.0827 in)
T	23960–PW5–000	2.13 mm (0.0839 in)
U	23961–PW5–000	2.16 mm (0.0850 in)
V	23962–PW5–000	2.19 mm (0.0862 in)
W	23963–PW5–000	2.22 mm (0.0874 in)
X	23964–PW5–000	2.25 mm (0.0886 in)
Y	23965–PW5–000	2.28 mm (0.0898 in)
Z	23966–PW5–000	2.31 mm (0.0909 in)
AA	23967–PW5–000	2.34 mm (0.0921 in)
AB	23968–PW5–000	2.37 mm (0.0933 in)
AC	23969–PW5–000	2.40 mm (0.0945 in)
AD	23970–PW5–000	2.43 mm (0.0957 in)
AZ	23941–PW8–000	2.46 mm (0.0968 in)
BZ	23942–PW8–000	2.49 mm (0.0980 in)
CZ	23943–PW8–000	2.52 mm (0.0992 in)
DZ	23944–PW8–000	2.55 mm (0.1004 in)
EZ	23945–PW8–000	2.58 mm (0.1016 in)

Oil Seal

Installation

1. Install the oil seal in the transmission housing using the special tools as shown.

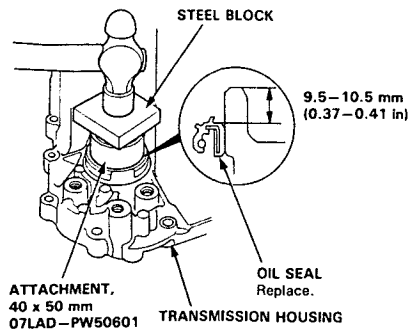

2. Install the oil seal in the clutch housing using the special tools as shown.

   NOTE: Drive the oil seal in until it is flush with the clutch housing as shown.

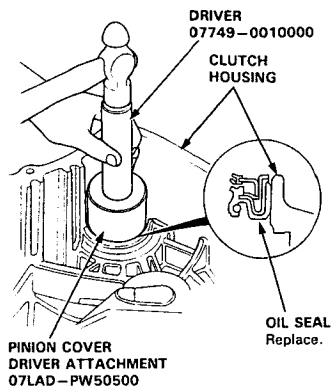

Mainshaft, Countershaft Assemblies

Reassembly

NOTE: Replace all spring pins.

1. Reassemble the parts following the numbered sequence.

   NOTE: Install the reverse idle gear and reverse gear shaft ⑮, then shift the 3rd/4th shift fork to the 4th gear side.

Bolt Size	Torque Value	
6 x 1.0 mm	10 N·m (1.0 kg-m, 7 lb-ft)	①
Drain Plug	40 N·m (4.0 kg-m, 29 lb-ft)	②
6 x 1.0 mm	12 N·m (1.2 kg-m, 9 lb-ft)	⑥
8 x 1.0 mm	31 N·m (3.1 kg-m, 23 lb-ft)	⑭
6 x 1.0 mm	15 N·m (1.5 kg-m, 11lb-ft)	⑯

	Free length
A	19.09 mm (0.75 in)

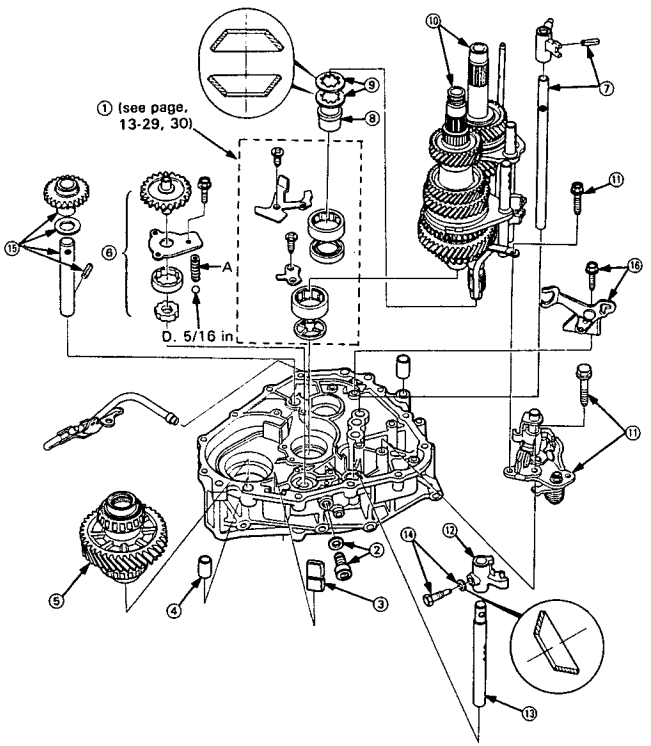

—1. Install the change holder.

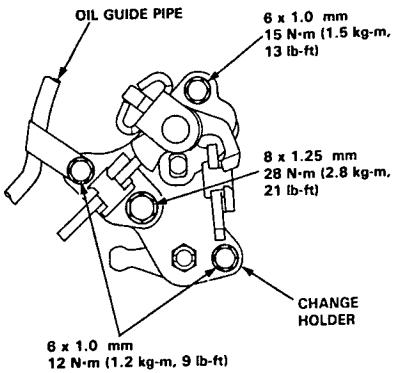

—2. Apply light hand pressure to the shift piece shaft, and measure distance Ⓐ.
If the distance is not correct, check installation.

Distance Ⓐ: 11.3—11.7 mm (0.44—0.46 in)

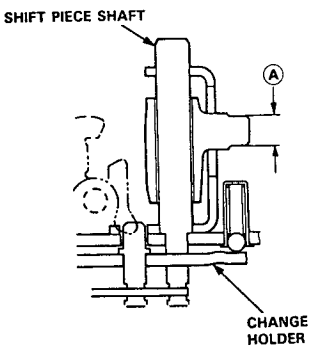

—3. Reassemble the 5th/reverse shift fork shaft and 5th/reverse shift piece.

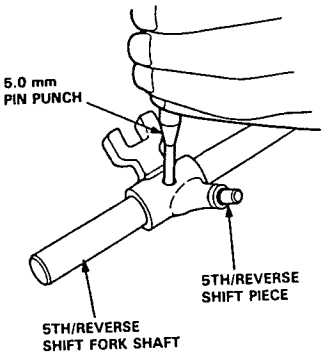

Transmission Housing

Reassembly

NOTE: Replace all sealing washers, oil seal, and O-ring.

1. Reassemble the parts following the numbered sequence.

	Free length
A	37.2 mm (1.46 in)

Bolt Size	Torque Value	
8 x 1.25 mm	28 N·m (2.8 kg-m, 21 lb-ft)	⑥
10 x 1.25 mm	55 N·m (5.5 kg-m, 40 lb-ft)	⑦
SEALING BOLT	22 N·m (2.2 kg-m, 16 lb-ft)	⑧
DRAIN PLUG	45 N·m (4.5 kg-m, 33 lb-ft)	⑨
6 x 1.0 mm	12 N·m (1.2 kg-m, 9 lb-ft)	⑩
8 x 1.25 mm	28 N·m (2.8 kg-m, 21lb-ft)	⑫

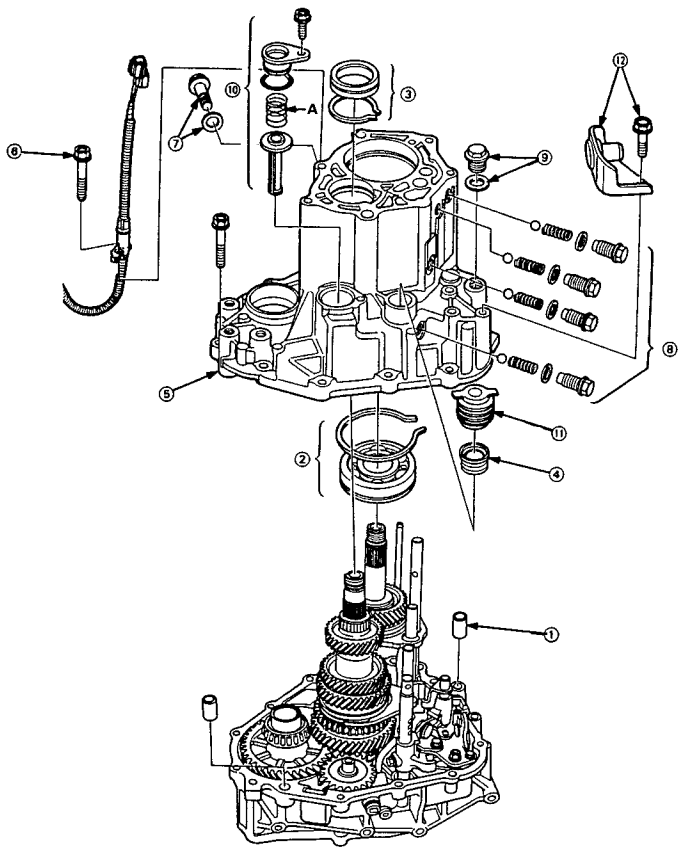

– 1. Apply liquid gasket to the transmission housing mating surface as shown.

NOTE:
- Use liquid gasket (P/N 08718–0001).
- Remove the dirt and oil from the sealing surface.
- If 20 minutes have passed after applying liquid gasket, reapply it and assemble the housings, and allow it to cure at least 30 minutes after assembly before filling the transmission with oil.

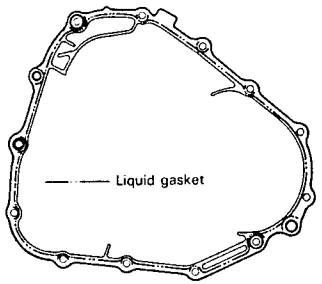

– 2. Install the steel balls, springs, washers, and sealing bolts.

Sealing Bolt Torque: 22 N·m (2.2 kg-m, 16 lb-ft)

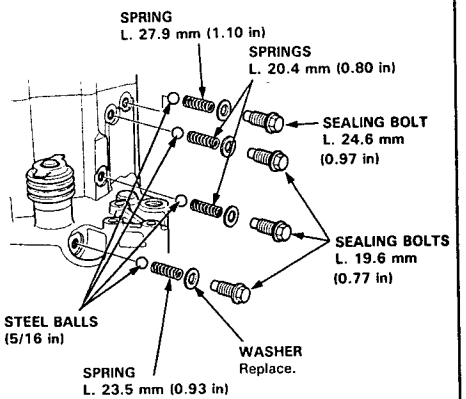

– 3. Tighten the transmission housing attaching bolts in a crisscross pattern in several steps, as shown below.

Torque: 28 N·m (2.8 kg-m, 21lb-ft)

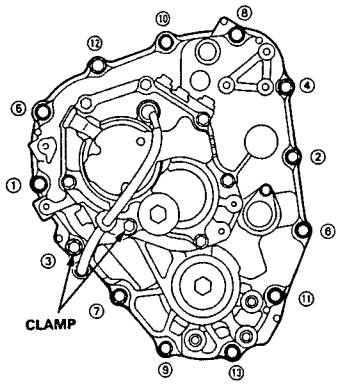

Transmission Housing

Bearing Installation

Mainshaft Side:

1. Expand the 89 mm snap ring, then press the ball bearing using the special tools and a press as shown.

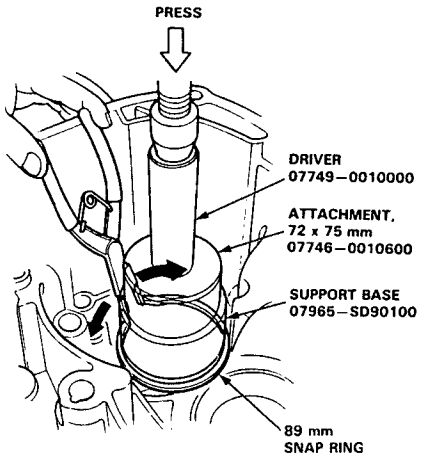

2. Check that the snap ring is securely seated in the groove of the ball bearing.

   Dimension A as installed: 3.0–8.0 mm (0.12–0.32 in)

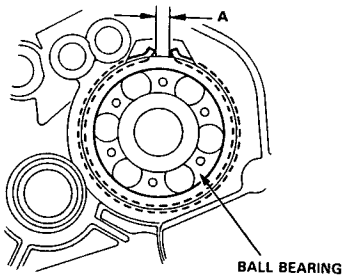

Countershaft Side:

1. Expand the 50 mm snap ring, then press the needle bearing outer race using the special tools and a press as shown.

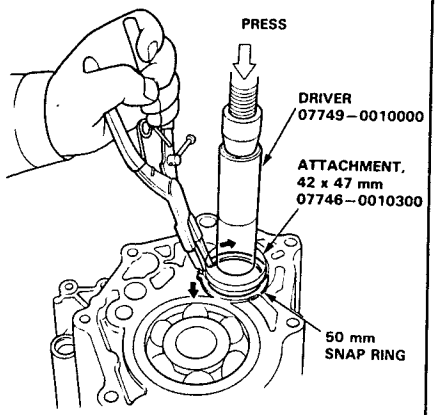

2. Check that the snap ring is securely seated in the groove of the needle bearing outer race.

   Dimension B as installed: 3.0–8.0 mm (0.12–0.32 in)

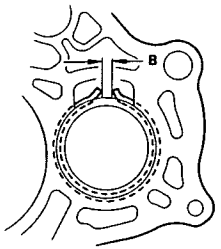

5th Gear

Installation

NOTE: Replace all locknuts.

1. Reassemble the parts following the numbered sequence.

	Bolt Size	Torque Value	
A	8 x 1.0 mm	30 N·m (3.0 kg-m, 22lb-ft)	⑨

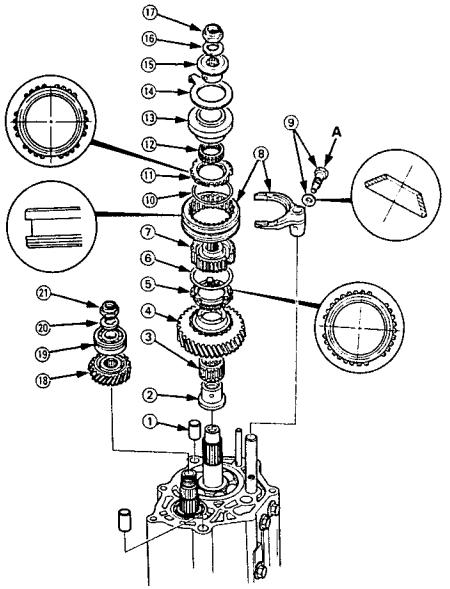

⑰ ㉑

–1. Install the special tool.

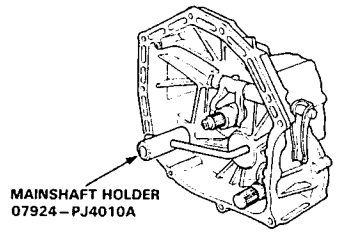

–2. Tighten the locknut, then stake the locknut tab into the groove.

NOTE: Mainshaft locknut has left-hand threads.

MAINSHAFT LOCKNUT
150 → 0 → 150 N·m
(15 → 0 → 15 kg-m, 108 → 0 → 108 lb-ft)

COUNTERSHAFT LOCKNUT
130 → 0 → 130 N·m
(13 → 0 → 13 kg-m, 94 → 0 → 94 lb-ft)

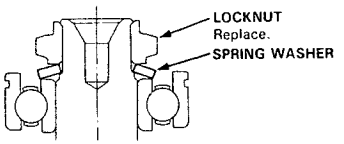

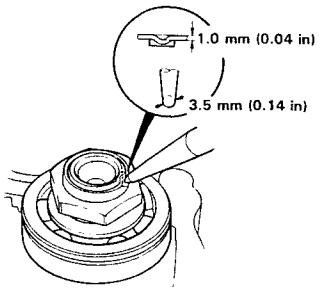

Transmission Cover

Installation

1. Reassemble the parts following the numbered sequence.

Bolt Size	Torque Value	
6 x 1.0 mm	12 N·m (1.2 kg-m, 9 lb-ft)	③
36 mm SEALING BOLT	25 N·m (2.5 kgm, 18 lb-ft)	⑥
8 x 1.25 mm	28 N·m (2.8 kg-m, 21 lb-ft)	⑤
BACK-UP LIGHT SWITCH	25 N·m (2.5 kg-m, 18 lb-ft)	⑧

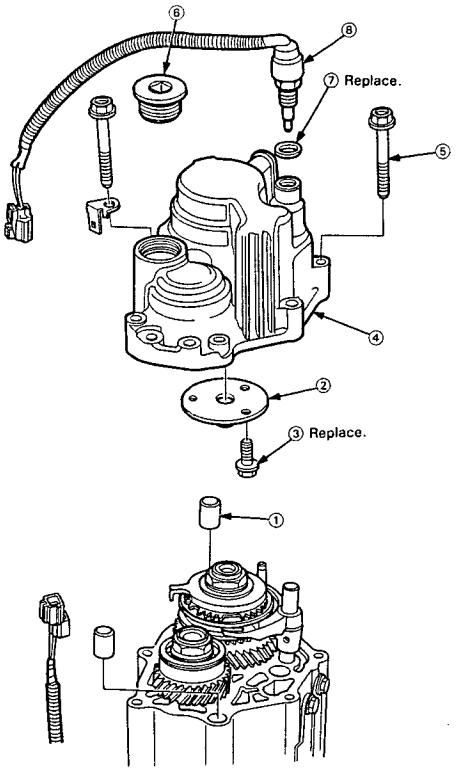

—1. Install the oil collect plate, then stake the bolt tab into the groove.

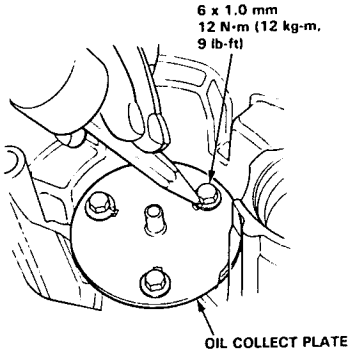

—2. Apply liquid gasket to the transmission cover mating surface as shown.

NOTE:
- Use liquid gasket (P/N 08718—0001).
- Remove the dirt and oil from the sealing surface.
- If 20 minutes have passed after applying liquid gasket, reapply it and assemble the housings, and allow it to cure at least 30 minutes after assembly before filling the transmission with oil.

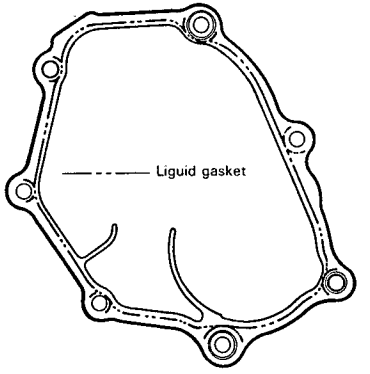

—3. Install the transmission cover by aligning the groove in the transmission cover with the fingre on the ring brake stopper.

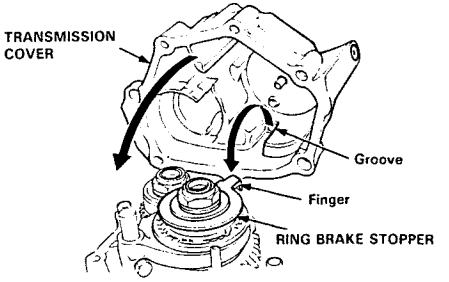

—4. Lower the transmission housing with the snap ring pliers, and set the snap ring in the groove in the countershaft bearing.

NOTE: Apply liquid gasket (P/N 08718—0001) to the threads of the 36 mm sealing bolt.

A : 4.6—9.7 mm (0.18—0.38 in)

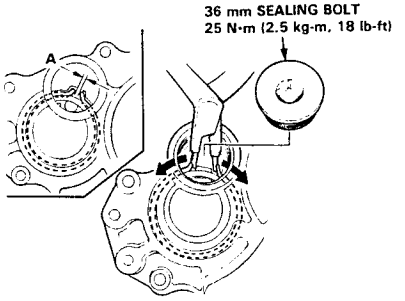

—5. Tighten the transmission cover attaching bolts in a crisscross pattern in several steps, as shown below.

Torque: 28 N·m (2.8 kg-m, 21 lb-ft)

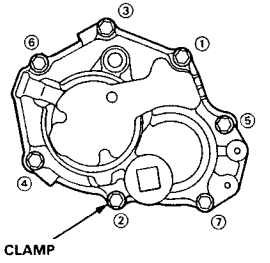

Transmission Assembly

Installation

1. Fill the clutch release bearing, release fork, and release guide with Super High Temp Urea Grease (P/N 08798 – 9002) (see page 12-10, 11).

2. Fill the extension shaft with Super High Temp Urea Grease (P/N 08798 – 9002).

   NOTE:
   - Check that the two dowel pins are installed in the clutch housing.
   - If the clutch housing is replace, the 26 mm shim must be adjusted (see page 15-27).

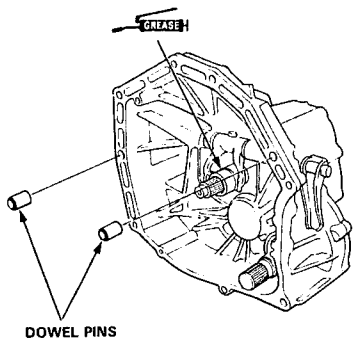

3. Fill the drive pinion with grease.
   If Pinion collar oil seal is replaced:
   A :19 – 20 g (0.67 – 0.71 oz)
   If pinion collar oil seal is not replaced:
   A : 3.5 – 4.5 g (0.12 – 0.16 oz)

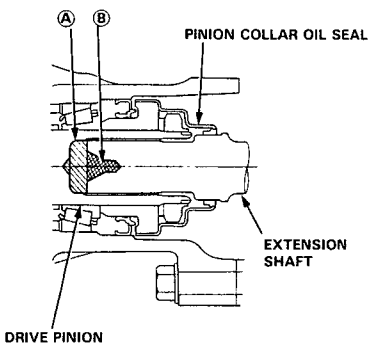

4. Place the transmission on the transmission jack, and raise it to the engine level.

5. Turn the release fork up, then, as you install the transmission, place the release fork in the groove of the release bearing by turing the release arm down.

   NOTE: Make sure the release fork engages the release bearing properly.

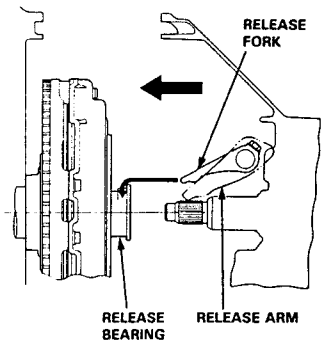

6. Install the transmission housing mounting bolt and the clutch cover.

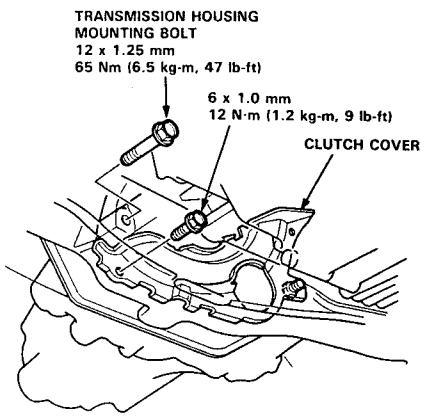

7. Install the transmission mounts.

8. Install the transmission housing mounting bolt.

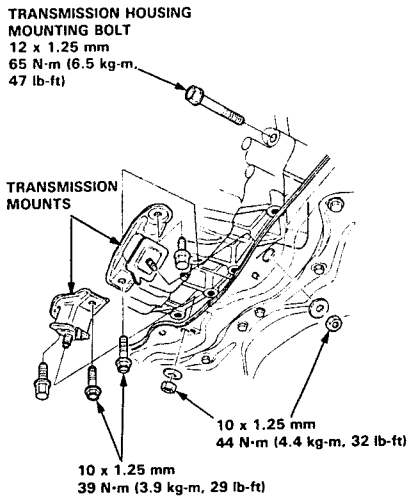

9. Install the set ring, then install the extension shaft.

   NOTE: Apply Super High Temp Urea Grease (P/N 08798 – 9002) to the extension shaft spline.

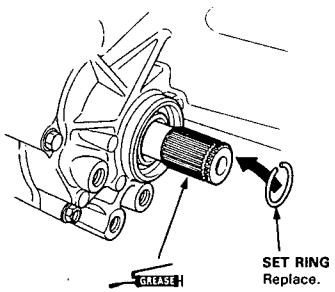

10. Fill the secondary gear and extension shaft with Super High Temp Urea Grease (P/N 08798 – 9002).

11. Install the 33 mm sealing bolt and secondary cover.

    NOTE:
    - Shift to low gear to lock the secondary gear.
    - Apply liquid gasket (P/N 08718 – 0001) to the threads.
    - Turn the secondary cover so the finger is facing down.

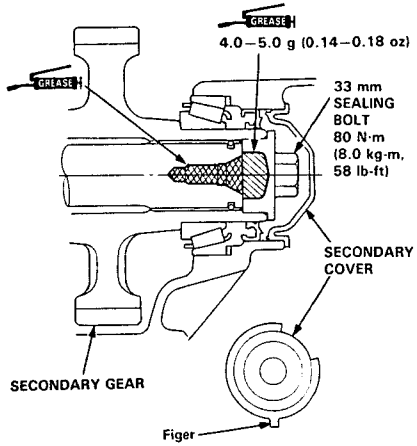

12. Install the shift rod and the extension rod.

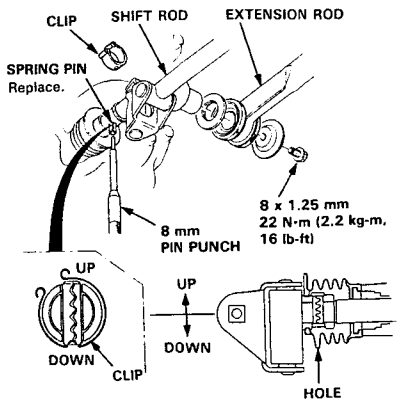

(cont'd)

Transmission Assembly

Installation (cont'd)

13. Install the exhaust pipe A and the exhaust stay.

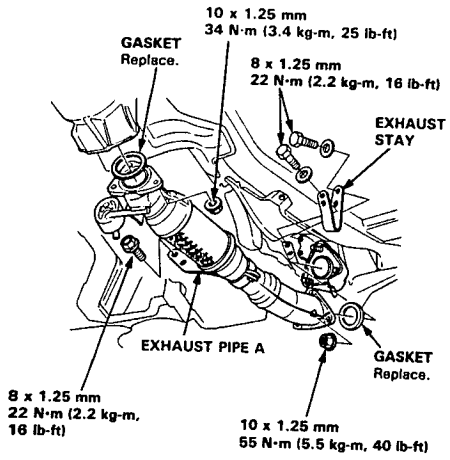

14. Install the transmission mount bracket and the transmission mount beam.

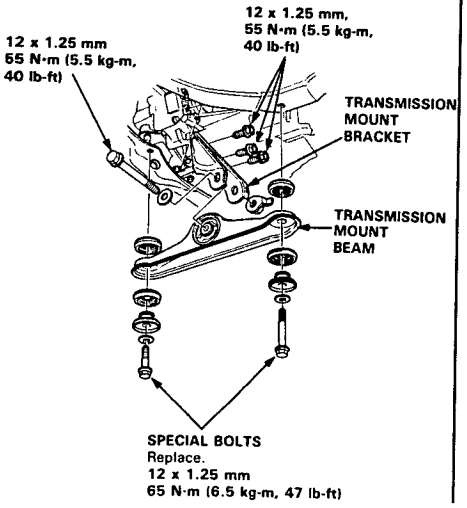

15. Install the 26 mm shim and the transmission housing munting bolts.

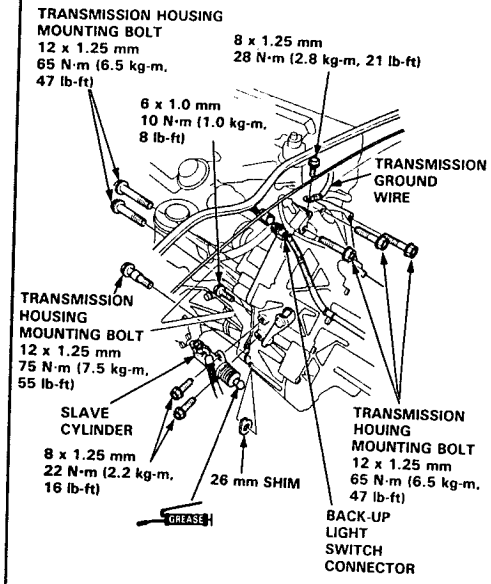

16. Install the slave cylinder.

17. Connect the back-up light switch connector and the transmission ground wire.

18. Install the control box.

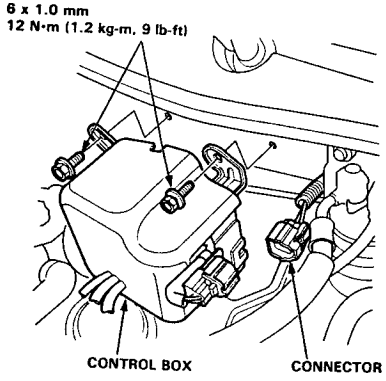

19. Install the distributor (see section 23).

20. Install the heat shield (see section 5).

21. Install the ABS relay box (see section 5).

22. Install the battery base and battery (see section 5).

23. Refill the transmission with oil (see page 13-3).

24. Connect the battery positive (+) and negative (−) cables to the battery.

25. Check the clutch operation.

26. Shift the transmission and check for smooth operation.

27. Check the ignition timing (see section 23).

    Ignition Timing
    - All models: 15 ± 2° BTDC (RED) at 700 ± 50 rpm
      in neutral (M/T)
      in N or P (A/T)

28. After service, reconnect power to the radio and turn it on.
    When the word "CODE" is displayed, enter the customer's 5-digit code to restore radio operation.

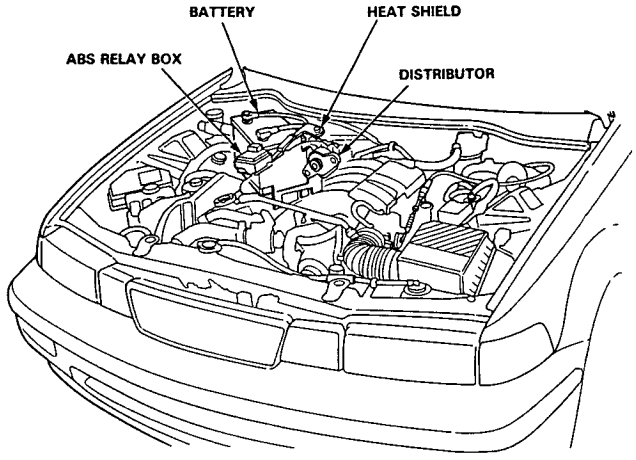

SUPPLEMENTAL RESTRAINT SYSTEM (SRS)
(If automatic transmission maintenance is required)

The VIGOR SRS includes a driver's side airbag, located in the steering wheel hub. In addition, the GS model has a front passenger's airbag located in the dashboard above the glove box. Information necessary to safely service the SRS is included in this Service Manual. Items marked with an asterisk (*) on the contents page include, or are located near, SRS components. Servicing, disassembling or replacing these items will require special precautions and tools, and should therefore be done by an authorized Acura dealer.

⚠WARNING

- **To avoid rendering the SRS inoperative, which could lead to personal injury or death in the event of a severe frontal collision, all maintenance must be performed by an authorized Acura dealer.**
- **Improper maintenance, including incorrect removal and installation of the SRS, could lead to personal injury caused by unintentional activation of the airbag (s).**
- **All SRS electrical wiring harnesses are covered with yellow outer insulation. Related components are located in the steering column, center console, dash, and dashboard lower panel, and in the dashboard above the glove box. Do not use electrical test equipment on these circuits.**

NOTE: The radio may have a coded theft protection circuit. Be sure to get the customer's code number before
– Disconnecting the battery.
– Removing the No. 39 (10 A) fuse in the under-hood fuse/relay box.
– Removing the radio.
After service, reconnect power to the radio and turn it on. When the word "CODE" is displayed, enter the customer's 5-digit code to restore radio operation.

Automatic Transmission

Special Tools 14-2

Description

Description 14-3
- Clutches 14-6
- Power Flow 14-9
- Electronic Control System 14-18
- Hydraulic Control 14-21
- Hydraulic Flow 14-27
- Lock-up System 14-37
- Parking Brake Mechanism 14-43

Electrical System

Circuit Diagram 14-44
Component Location 14-46
*Troubleshooting Procedures 14-47
Electrical Troubleshooting
- Symptom-to-Component Chart 14-50
- Troubleshooting Flowchart 14-52

*Transmission Control Module (TCM) 14-76
Mainshaft/Countershaft Speed Sensors 14-77
Lock-up Control Solenoid Valve A/B 14-78
Shift Control Solenoid Valve 14-80
Linear Solenoid 14-81
A/T Gear Position Switch 14-82

Hydraulic System

Hydraulic System
- Symptom-to-Component Chart 14-84

*Road Test 14-88
Stall Speed 14-90
Fluid Level 14-91
Pressure Testing 14-92
Lower Valve Body Assembly 14-97
Shift Control Solenoid Valve 14-100

Transmission

Transmission
- Removal 14-101

Illustrated Index
- Housing/Lower Valve Body 14-106
- Rear Cover 14-108
- Transmission Housing 14-110
- Torque Converter Housing/Valve Body 14-112

Transmission Housing/Lower Valve Body Assembly
- Removal 14-114

Rear Cover
- Removal 14-116

Transmission Housing
- Removal 14-118

Torque Converter Housing/Valve Body
- Removal 14-120

Lower Valve Body Assembly 14-122
Valve Body 14-123
Valve 14-124
Valve Caps 14-125
Main Valve Body 14-126
Servo Body 14-128
Regulator Valve Body 14-129
Oil Pump Body 14-130
Oil Pump 14-131
2nd Accumulator Body/Throttle Valve Body 14-132
Throttle Valve Body/Linear Solenoid 14-133
1st Accumulator/1st-hold Accumulator 14-134
Mainshaft 14-135
Countershaft 14-138
One-way Clutch/Parking Gear 14-141
Clutch
- Illustrated Index 14-142
- Disassembly 14-145
- Reassembly 14-147

1st-hold Clutch Bearing 14-151
Torque Converter Housing Bearings
- Mainshaft Bearing/Oil Seal Replacement 14-152
- Countershaft Bearing Replacement 14-153

Transmission Housing Bearings 14-153
Extension Shaft 14-154
Secondary Driven Gear Shaft Oil Seal 14-154
Tapered Roller Bearing 14-155
Oil Seal
- Removal 14-156

Bearing Outer Race 14-156
Tapered Roller Bearing Preload 14-158
Oil Seal
- Installation 14-159

Reverse Idler Gear 14-160
Parking Brake Roller Rod 14-161
Control Shaft/Detent Spring 14-162
Transmission
- Reassembly 14-164

Torque Converter 14-172
Transmission
- Installation 14-173
- Cooler Flushing 14-178

*Gearshift Selector 14-180
*Shift Cable
- Removal/Installation 14-181
- Adjustment 14-182

*A/T Gear Position Indicator Panel 14-184

Special Tools

Ref No.	Tool Number	Description	Qty	Page Reference
①	07GAB–PF50100	Mainshaft Holder	1	14-117, 169
②	07GAD–SD40101	Attachment, 78 x 90 mm	1	14-157
③	07GAE–PG40200	Clutch Spring Compressor Bolt Assembly	1	14-145, 148
④	07HAC–PK4010A	Housing Puller	1	14-119
⑤	07HAE–PL50100	Clutch Spring Compressor Attachment	1	14-145, 148
⑥	07LAC–PW50101	Extension Shaft Puller	1	14-102
⑦	07LAD–PW50500	Pinion Cover Driver Attachment	1	14-159
⑧	07LAD–PW50601	Attachment, 40 x 50 mm	1	14-155,159
⑨	07LAE–PX40100	Clutch Spring Compressor Attachment	1	14-145, 148
⑩	07LAJ–PT3010A	Test Harness	1	14-49, 88
⑪	07MAJ–PY4011A	A/T Oil Pressure Hose, 2210 mm	4	14-92
⑫	07MAJ–PY40120	A/T Oil Pressure Hose Adapter	4	14-92
⑬	07406–0020400	A/T Oil Pressure Gauge Set W/Panel	1	14-92
⑭	07406–0070300	A/T Low Pressure Gauge W/Panel	1	14-92
⑮	07736–A01000A	Adjustable Bearing Puller, 25–40 mm	1	14-153
⑯	07746–0010300	Attachment, 42 x 47 mm	1	14-154
⑰	07746–0010500	Attachment, 62 x 68 mm	1	14-152, 153
⑱	07746–0010600	Attachment, 72 x 75 mm	1	14-152, 157
⑲	07746–0030100	Driver I.D. 40 mm	1	14-151
⑳	07749–0010000	Driver	1	14-152, 153, 154, 157
㉑	07947–6340500	Attachment	1	14-152
㉒	J 38405–A	Transmission Cooler Flusher	1	14-178
㉓	KS–AHM–32–003	Digital Multimeter	1	14-49, 88

⑮ must be used with commercially available 3/8 x 16 threads/in slide hammer.

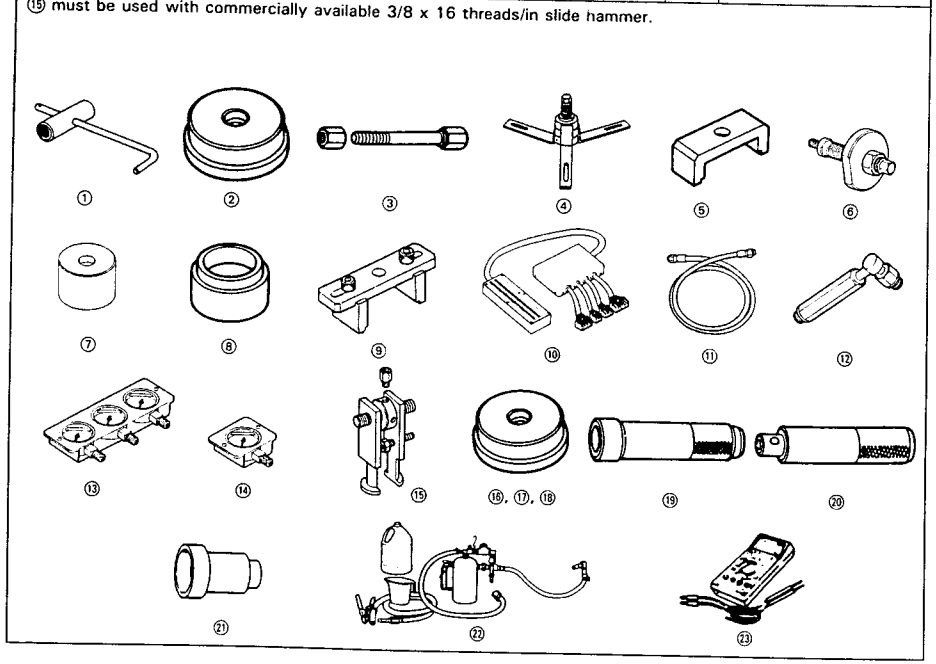

Description

The automatic transmission is a combination of a 3-element torque converter and a dual-shaft electronically controlled automatic transmission which provides 4 speeds forward and 1 reverse. The entire unit is positioned in line with the engine.

Torque Converter, Gears and Clutches

The torque converter consists of a pump, turbine and stator, assembled in a single unit.
They are connected to the engine crankshaft so they turn together as a unit as the engine turns.
Around the outside of the drive plate is a ring gear which meshes with the starter pinion when the engine is being started.
The entire torque converter assembly serves as a flywheel while transmitting power to the transmission mainshaft.
The transmission has two parallel shafts, the mainshaft and the countershaft. The mainshaft is in line with the engine crankshaft.
The mainshaft includes the clutches for 1st, 2nd and 4th, and gears for 4th, 2nd, 1st and reverse (3rd gear is integral with the mainshaft, while the reverse gear is integral with 4th gear).
The countershaft includes the clutches for 3rd, and 1st-hold, and gears for 3rd, 4th, 1st, 2nd, reverse and parking. The secondary drive gear is integrated with the countershaft.
The gears on the mainshaft are in constant mesh with those on the countershaft.
When certain combinations of gears in the transmission are engaged by clutches, power is transmitted from the mainshaft to the countershaft to provide [1], [2], [D3], [D4], and [R] positions.

Electronic Control

The electronic control system consists of the Transmission Control Module (TCM), sensors, a linear solenoid and four solenoid valves. Shifting and lock-up are electronically controlled for comfortable driving under all conditions.
The TCM is located behind the glove box on the passenger's side.

Hydraulic Control

The lower valve body assembly includes the main valve body, servo body and shift control solenoid valves. They are bolted on the lower part of the transmission housing.
Other valve bodies, the regulator valve body, oil pump body, 2nd accumulator body, and throttle valve body, are bolted to the torque converter housing.
The main valve body contains the manual valve, 1–2 shift valve, 2–3 shift valve, 3–4 shift valve, 4th kick-down valve, 3rd kick-down valve, 2–3 orifice control valve, 3–4 orifice control valve, 4th exhaust valve, servo control valve, and Clutch Pressure Control (CPC) valve.
The servo body contains the servo valve, 3rd and 4th accumulator pistons.
The regulator valve body contains the regulator valve, lock-up shift valve, and cooler relief valve.
Fluid from the regulator passes through the manual valve to the various control valves.
The throttle valve body includes the throttle valve which is bolted onto the 2nd accumulator body. The 2nd accumulator piston is assembled in the 2nd accumulator body.
The linear solenoid is joined the throttle valve body.
The oil pump body contains the modulator valve, lock-up control valve, lock-up timing valve, and relief valve.
The torque converter check valve is located in the torque converter hausing under the oil pump body.
The 1st and 1st-hold accumulator pistons are assembled in the rear cover.
The 1st, 1st-hold, 3rd, and 4th clutches receive oil from their respective feed pipes.

Shift Control Mechanism

Input from various sensors located throughout the car determines which shift control solenoid valve the TCM will activate. Activating a shift control solenoid valve changes modulator pressure, causing a shift valve to move. This pressurizes a line to one of the clutches, engaging that clutch and its corresponding gear.

Lock-up Mechanism

In [D4] position, in 2nd, 3rd and 4th, and in [D3] position in 3rd, pressurized fluid is drained from the back of the torque converter through an oil passage, causing the lock-up piston to be held against the torque converter cover. As this takes place, the mainshaft rotates at the same speed as the engine crankshaft. Together with hydraulic control, the TCM optimizes the timing of the lock-up mechanism. The lock-up valves control the range of lock-up according to lock-up control solenoid valves A and B, and throttle valve. When lock-up control solenoid valves A and B activate, modulator pressure changes. The lock-up control solenoid valves A and B are mounted on the torque converter housing, and are controlled by the TCM.

(cont'd)

Description

(cont'd)

Gear Selection

The selector lever has seven positions; [P] PARK, [R] REVERSE, [N] NEUTRAL, [D4] 1st through 4th positions, [D3] 1st through 3rd positions, [2] 2nd gear and [1] 1st gear.

Position	Description
[P] PARK	Front wheels locked; parking pawl engaged with parking gear on countershaft. All clutches released.
[R] REVERSE	Reverse; reverse selector engaged with countershaft reverse gear and 4th clutch locked.
[N] NEUTRAL	All clutches released.
[D4] DRIVE (1st through 4th)	General driving; starts off in 1st, shifts automatically to 2nd, 3rd, then 4th, depending on vehicle speed and throttle position. Downshifts through 3rd, 2nd and 1st on deceleration to stop. The lock-up mechanism comes into operation in 2nd, 3rd and 4th speeds when the transmission in [D4] position.
[D3] DRIVE (1st through 3th)	For rapid acceleration at highway speeds and general driving; starts off in 1st, shifts automatically to 2nd then 3rd, depending on vehicle speed and throttle position. Downshifts through lower gears on deceleration to stop. Under certain conditions, the lock-up mechanism will operate in the [D3] position.
[2] SECOND	Driving in 2nd gear; stays in 2nd gear, does not shift up and down. For engine braking or better traction starting off on loose or slippery surface.
[1] FIRST	Driving in 1st gear; stays in 1st gear, does not shift up. For engine braking.

Starting is possible only in [P] and [N] positions through use of a slide-type, neutral-safety switch.

Automatic Transaxle (A/T) Gear Position Indicator

The A/T gear position indicator in the instrument panel shows what gear has been selected without having to look down at the console.

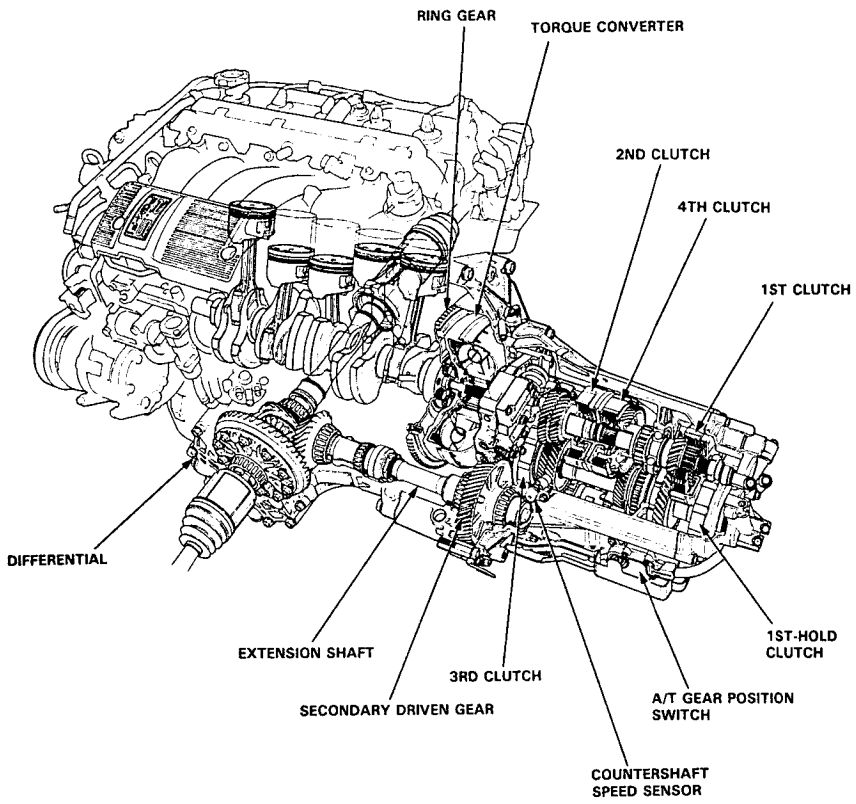

Description

Clutches

The four speed automatic transmission uses hydraulically actuated clutches to engage or disengage the transmission gears. When clutch pressure is introduced into the clutch drum, the clutch piston is applied. This presses the friction discs and steel plates together, locking them so they don't slip. Power is then transmitted through the engaged clutch pack to its hub-mounted gear.

Likewise, when clutch pressure is bled from the clutch pack, the piston releases the friction discs and steel plates, and they are free to slide past each other while disengaged. This allows the gear to spin independently of its shaft, transmitting no power.

1st Clutch
The 1st clutch engages/disengages 1st gear, and is located at the end of the mainshaft, just behind the rear cover. The 1st clutch is supplied clutch pressure by its oil feed pipe within the mainshaft.

1st-hold Clutch
The 1st-hold clutch engages/disengages 1st-hold or [1] position, and is located at the end of the countershaft, just behind the rear cover. The 1st-hold clutch is supplied clutch pressure by its oil feed pipe within the countershaft.

2nd Clutch
The 2nd clutch engages/disengages 2nd gear, and is located at the center of the mainshaft. The 2nd clutch is joined back-to-back to the 4th clutch. The 2nd clutch is supplied clutch pressure through the mainshaft by a circuit connected to the regulator valve body.

3rd Clutch
The 3rd clutch engages/disengages 3rd gear, and is located at the end of the countershaft, opposite the rear cover. The 3rd clutch is supplied clutch pressure by its oil feed pipe within the countershaft.

4th Clutch
The 4th clutch engages/disengages 4th gear, as well as reverse gear, and is located at the center of the mainshaft. The 4th clutch is joined back-to-back to the 2nd clutch. The 4th clutch is supplied clutch pressure by its oil feed pipe within the mainshaft.

One-way Clutch
The one-way clutch is positioned between the parking gear and countershaft 1st gear, with the parking gear splined to the countershaft. Countershaft 1st gear provides the outer race surface, and the parking gear provides the inner race surface. The one-way clutch locks up when power is transmitted from the mainshaft 1st gear to the countershaft 1st gear. The 1st clutch and gears remain engaged in the 1st, 2nd, 3rd, and 4th gear positions in the [D4], [D3] or [2] position. However, the one-way clutch disengages when the 2nd, 3rd, or 4th clutches /gears are applied in the [D4], [D3] or [2] position. This is because the increased rotational speed of the gears on the countershaft over-ride the locking "speed range" of the one-way clutch. Thereafter, the one-way clutch free-wheels with the 1st clutch still engaged.

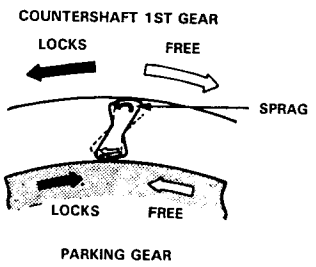

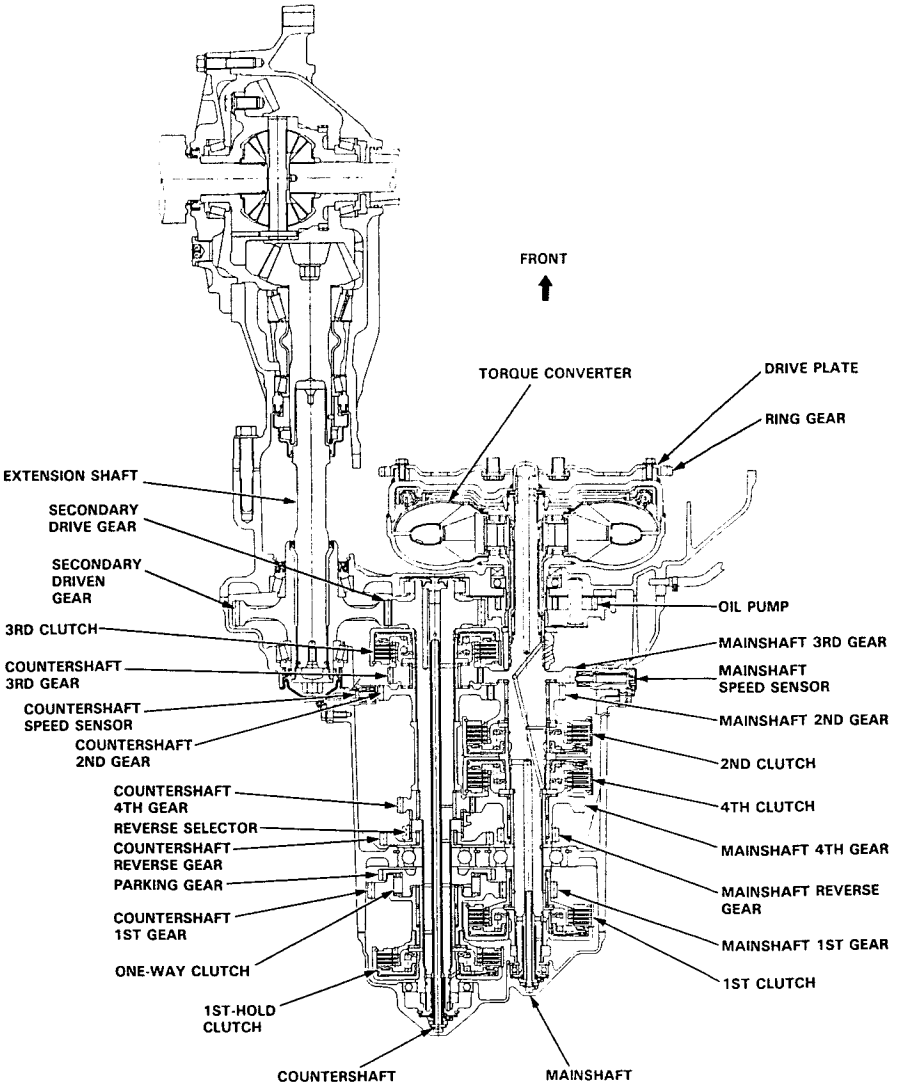

(cont'd)

Description

Clutches (cont'd)

Lock-up Clutch

1. Operation (clutch on)

With the lock-up clutch on, the oil in the chamber between the torque converter cover and lock-up piston is discharged, and the converter oil exerts pressure through the piston against the converter cover. As a result, the converter turbine is locked on the converter cover. The effect is to bypass the converter, thereby placing the car in direct drive.

Power flow

The power flows by way of:

Engine
↓
Drive plate
↓
Torque converter cover
↓
Lock-up piston
↓
Damper spring
↓
Turbine
↓
Mainshaft

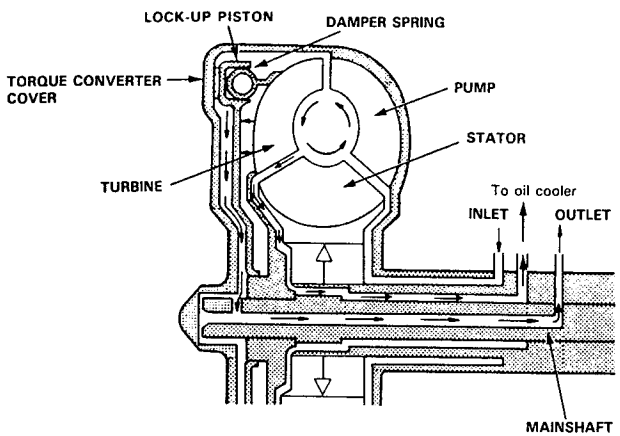

2. Operation (clutch off)

With the lock-up clutch off, the oil flows in the reverse of CLUTCH ON. As a result, the lock-up piston is moved away from the converter cover; that is, the torque converter lock-up is released.

Power flow

Engine
↓
Drive plate
↓
Torque converter cover
↓
Pump
↓
Turbine
↓
Mainshaft

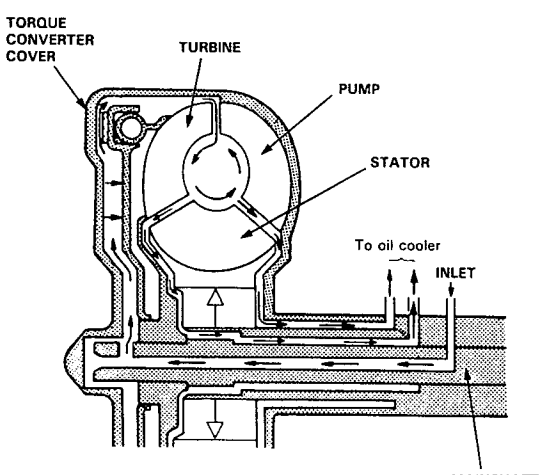

Power Flow

PART / POSITION		TORQUE CONVERTER	1ST-HOLD CLUTCH	1ST GEAR 1ST CLUTCH	2ND GEAR 2ND CLUTCH	3RD GEAR 3RD CLUTCH	4TH		REVERSE GEAR	PARKING GEAR
							GEAR	CLUTCH		
P		O	×	×	×	×	×	×	×	O
R		O	×	×	×	×	×	O	O	×
N		O	×	×	×	×	×	×	×	×
D4	1ST	O	×	O	×	×	×	×	×	×
	2ND	O	×	O*	O	×	×	×	×	×
	3RD	O	×	O*	×	O	×	×	×	×
	4TH	O	×	O*	×	×	O	O	×	×
D3	1ST	O	×	O	×	×	×	×	×	×
	2ND	O	×	O*	O	×	×	×	×	×
	3RD	O	×	O*	×	O	×	×	×	×
2		O	×	O*	O	×	×	×	×	×
1		O	O	O	×	×	×	×	×	×

O: Operates, ×: Doesn't operate, *: Although the 1st clutch engages, driving power is not transmitted because the one-way clutch slips.

N Position

The hydraulic pressure is not applied to the clutches. Power is not transmitted to the countershaft.

P Position

The hydraulic pressure is not applied to the clutches. Power is not transmitted to the countershaft.
The countershaft is locked by the parking pawl interlocking the parking gear.

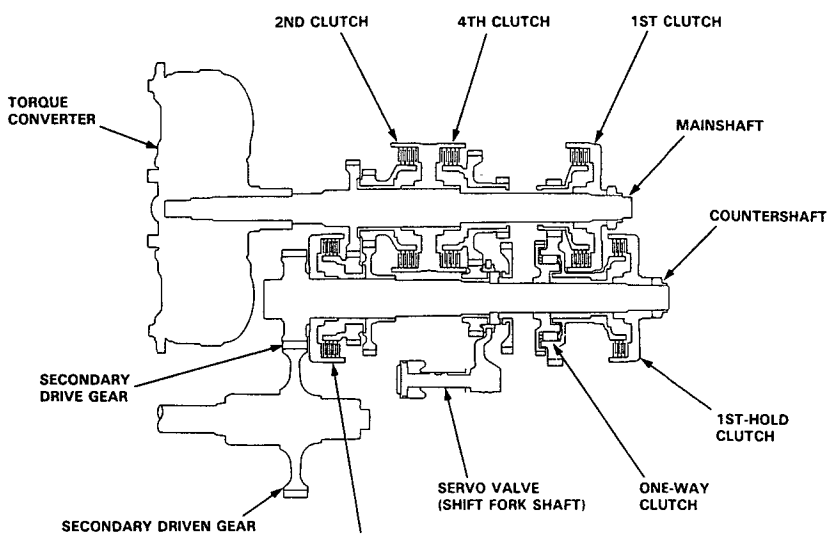

(cont'd)

Description

– Power Flow (cont'd)

[1] Position

At [1] position, hydraulic pressure is applied to the 1st clutch and 1st-hold clutch.

The power flow when accelerating is as follows:

1. The hydraulic pressure is applied to the 1st clutch on the mainshaft and power is transmitted via the 1st clutch to the mainshaft 1st gear.
2. The hydraulic pressure is also applied to the 1st-hold clutch on the countershaft. The power transmitted to the mainshaft 1st gear is conveyed via the countershaft 1st gear to the one-way clutch and the 1st-hold clutch. The one-way clutch is used to drive the countershaft, and the 1st-hold clutch drives the countershaft.
3. The power is transmitted to the secondary drive gear and drives the secondary driven gear.

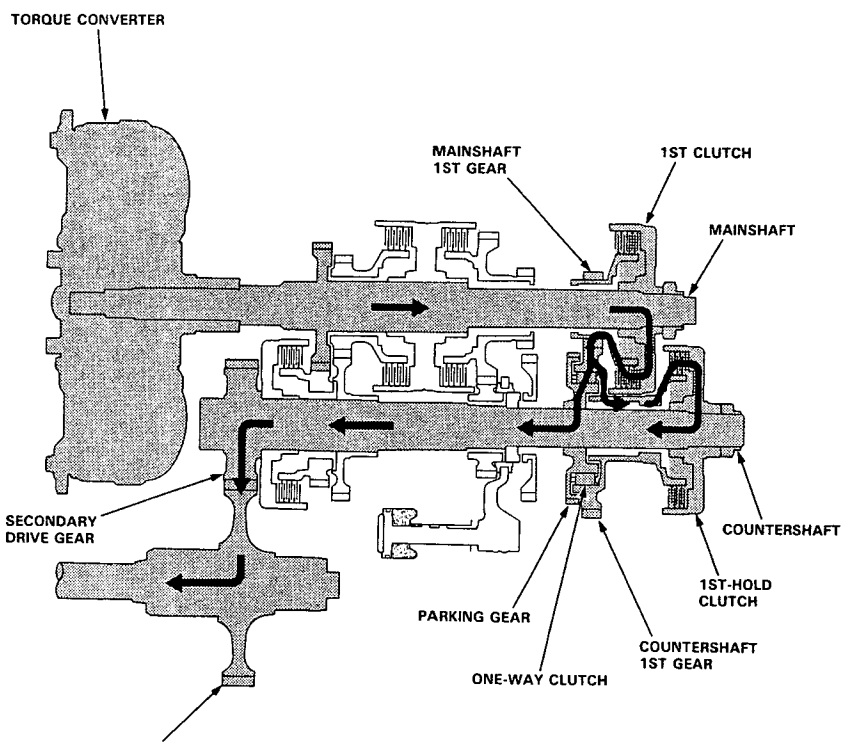

[1] Position

The power flow when decelerating is as follows:

1. Rolling resistance from the road surface goes through the front wheels to the secondary drive gear, then to the countershaft 1st gear via the 1st-hold clutch which is applied during deceleration.
2. The one-way clutch becomes free at this time because the countershaft torque reverses.
3. The counterforce conveyed to the countershaft 1st gear turns the mainshaft 1st gear. At this time, since hydraulic pressure is also applied to the 1st clutch, counterforce is also transmitted to the mainshaft. As a result, engine braking can be obtained with 1st gear.

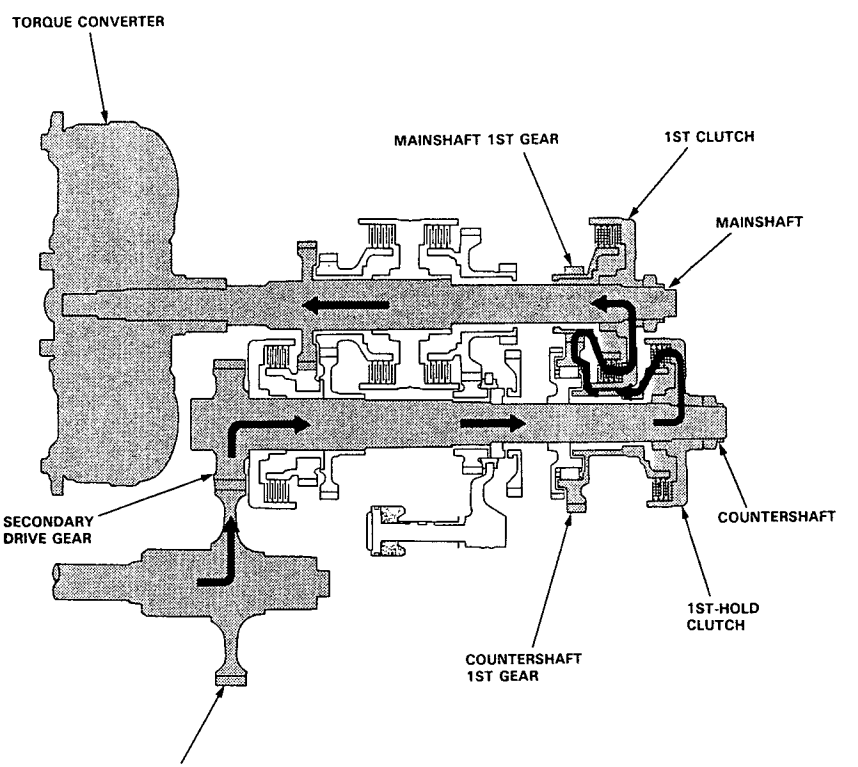

(cont'd)

Description

Power Flow (cont'd)

[2] Position

[2] Position is provided to drive only in 2nd speed.

1. The hydraulic pressure is applied to the 2nd clutch on the mainshaft and power is transmitted via the 2nd clutch to the mainshaft 2nd gear.
2. The power transmitted to the mainshaft 2nd gear is conveyed via the countershaft 2nd gear, and drives the countershaft.
3. The power is transmitted to the secondary drive gear and drives the secondary driven gear.

   NOTE: The hydraulic pressure is also applied to the 1st clutch, but since the rotation speed of the 2nd gear exceeds that of 1st gear, power from 1st gear is cut off at the one-way clutch.

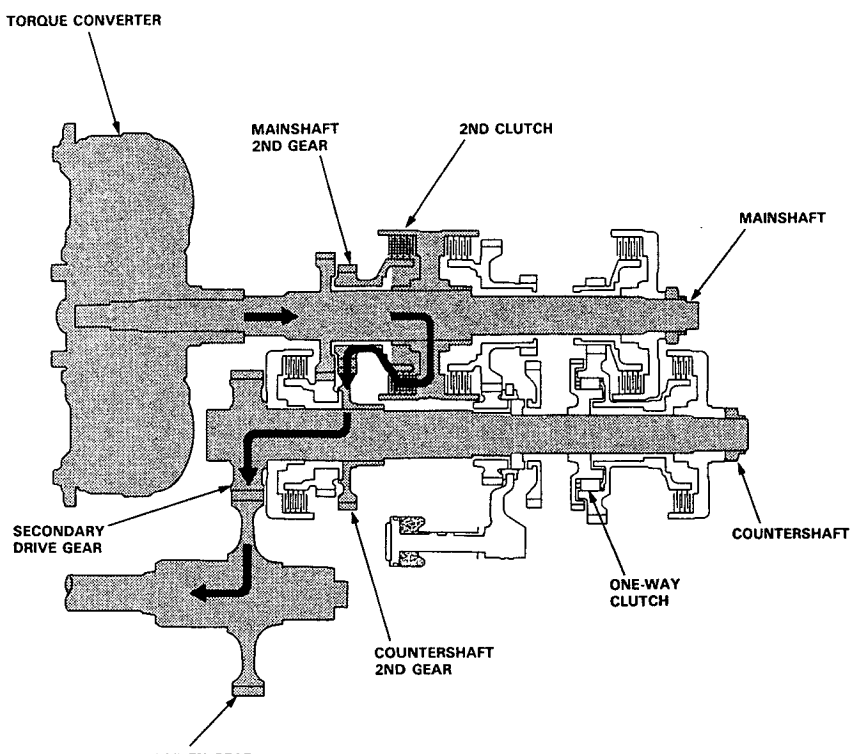

In [D4] or [D3] position, the optimum gear is automatically selected from 1st, 2nd, 3rd and 4th speeds, according to conditions such as the balance between throttle opening (engine load) and vehicle speed.

[D4] or [D3] Position, 1st speed

1. The hydraulic pressure is applied to the 1st clutch, which rotates together with the mainshaft, and the mainshaft 1st gear rotates.
2. The power is transmitted to the countershaft 1st gear, and drives the countershaft via the one-way clutch.
3. The power is transmitted to the secondary drive gear and drives the secondary driven gear.

   NOTE: In [D4] or [D3] position, the hydraulic pressure is not applied to the 1st-hold clutch.

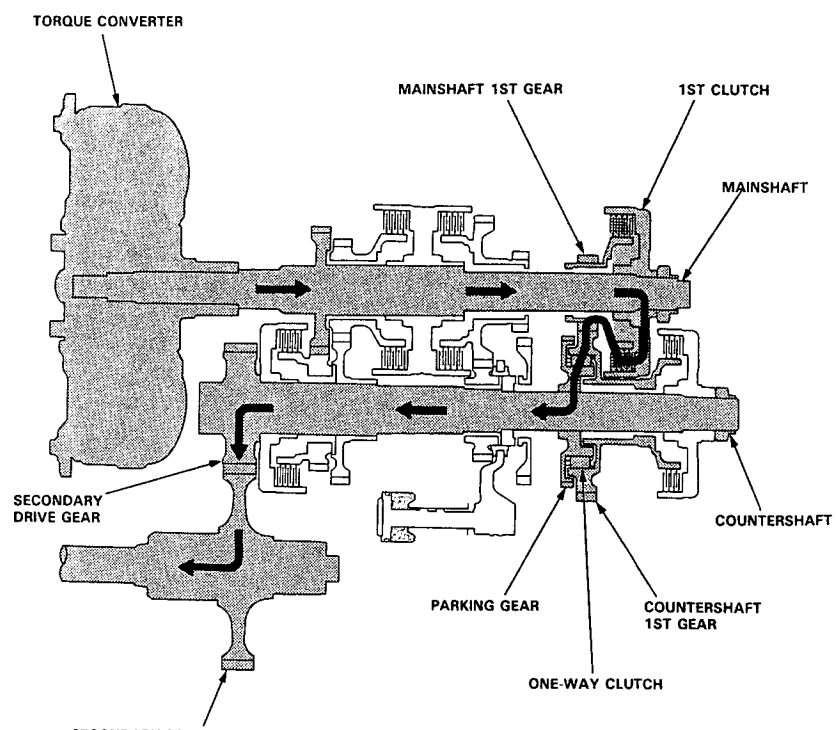

(cont'd)

Description

Power Flow (cont'd)

D4 or D3 Position, 2nd speed

1. The hydraulic pressure is applied to the 2nd clutch, which rotates together with the mainshaft, and the mainshaft 2nd gear rotates.
2. The power is transmitted to the countershaft 2nd gear, and drives the countershaft.
3. The power is transmitted to the secondary drive gear and drives the secondary driven gear.

NOTE: In D4 or D3 position, 2nd speed, the hydraulic pressure is also applied to the 1st clutch, but since the rotation speed of 2nd gear exceeds that of 1st gear, power from 1st gear is cut off at the one-way clutch.

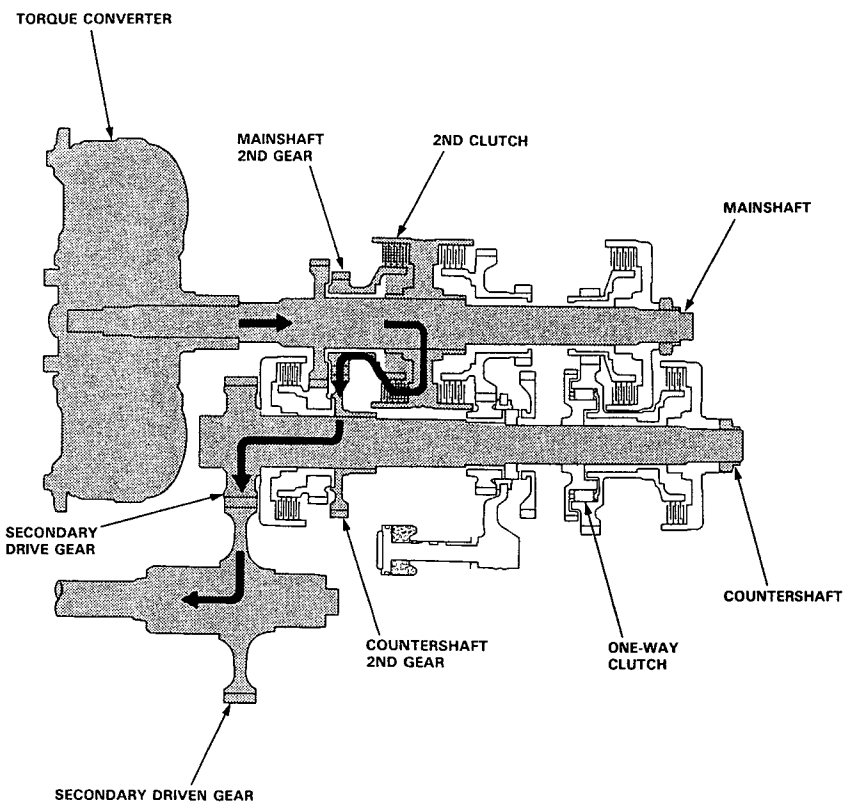

D4 or D3 Position, 3rd speed

1. The hydraulic pressure is applied to the 3rd clutch. The power from mainshaft 3rd gear is transmitted to the countershaft 3rd gear.
2. The power is transmitted to the secondary drive gear and drives the secondary driven gear.

NOTE: In D4 or D3 position, 3rd speed, the hydraulic pressure is also applied to the 1st clutch, but since the rotation speed of 3rd gear exceeds that of 1st gear, power from 1st gear is cut off at the one-way clutch.

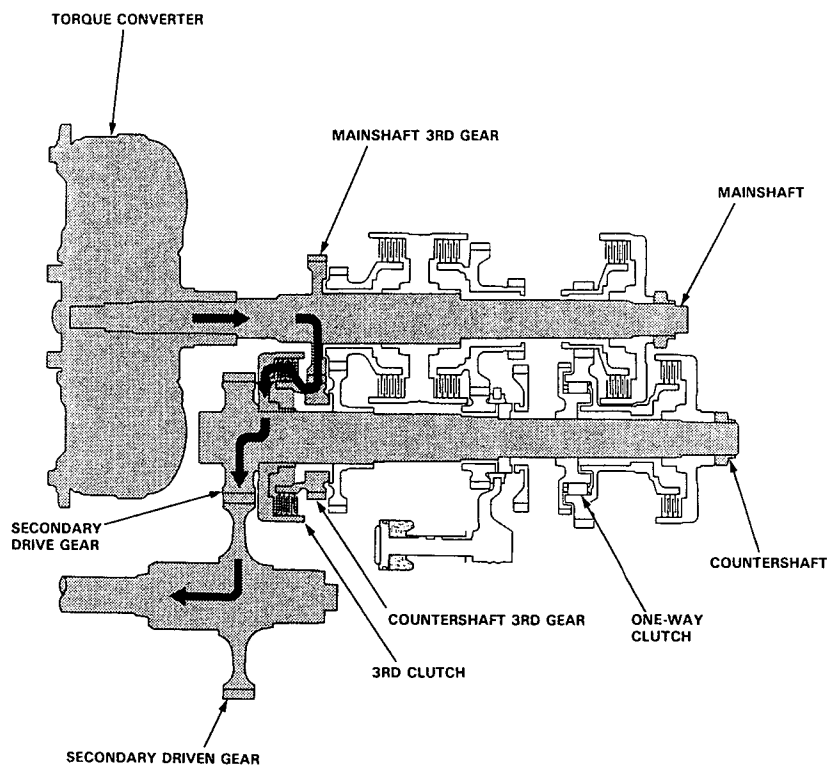

(cont'd)

Description

Power Flow (cont'd)

D4 Position, 4th speed

1. The hydraulic pressure is applied to the 4th clutch, which rotates together with the mainshaft, and the mainshaft 4th gear rotates.
2. The power is transmitted to the countershaft 4th gear, and drives the countershaft.
3. The power is transmitted to the secondary drive gear and drives the secondary driven gear.

NOTE: In D4 position, 4th speed, the hydraulic pressure is also applied to the 1st clutch, but since the rotation speed of 4th gear exceeds that of 1st gear, power from 1st gear is cut off at the one-way clutch.

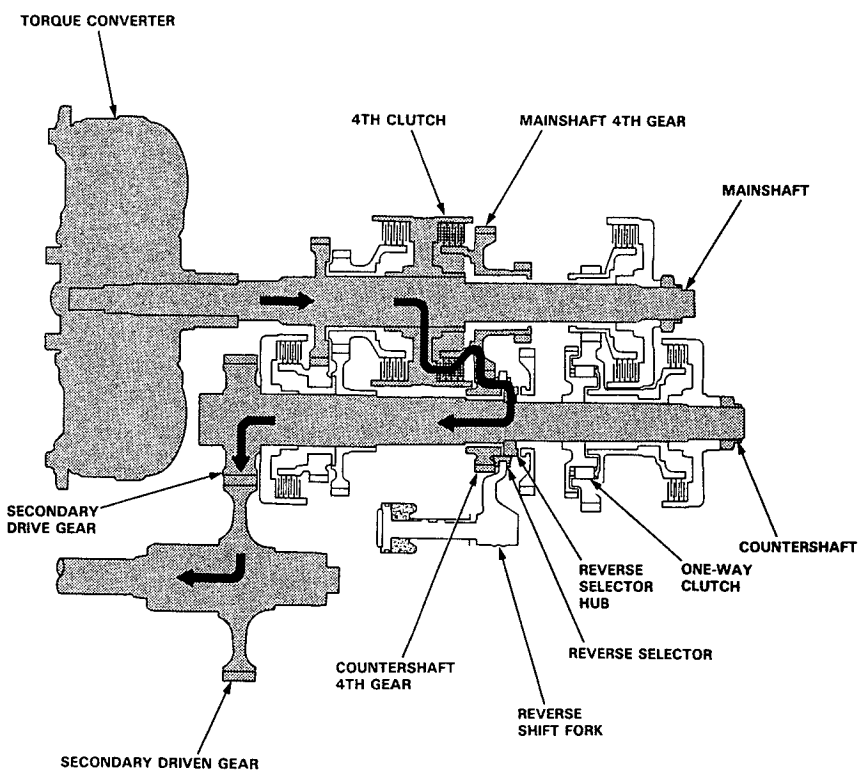

R Position

1. The hydraulic pressure is switched by the manual valve to the servo valve, which moves the reverse shift fork to the reverse position. The reverse shift fork engages with the reverse selector, reverse selector hub and the countershaft reverse gear.
2. The hydraulic pressure is also applied to the 4th clutch. The power is transmitted from the mainshaft reverse gear via the reverse idler gear to the countershaft reverse gear.
3. The rotation direction of the countershaft reverse gear is changed via the reverse idler gear.
4. The power is transmitted to the secondary drive gear and the secondary driven gear.

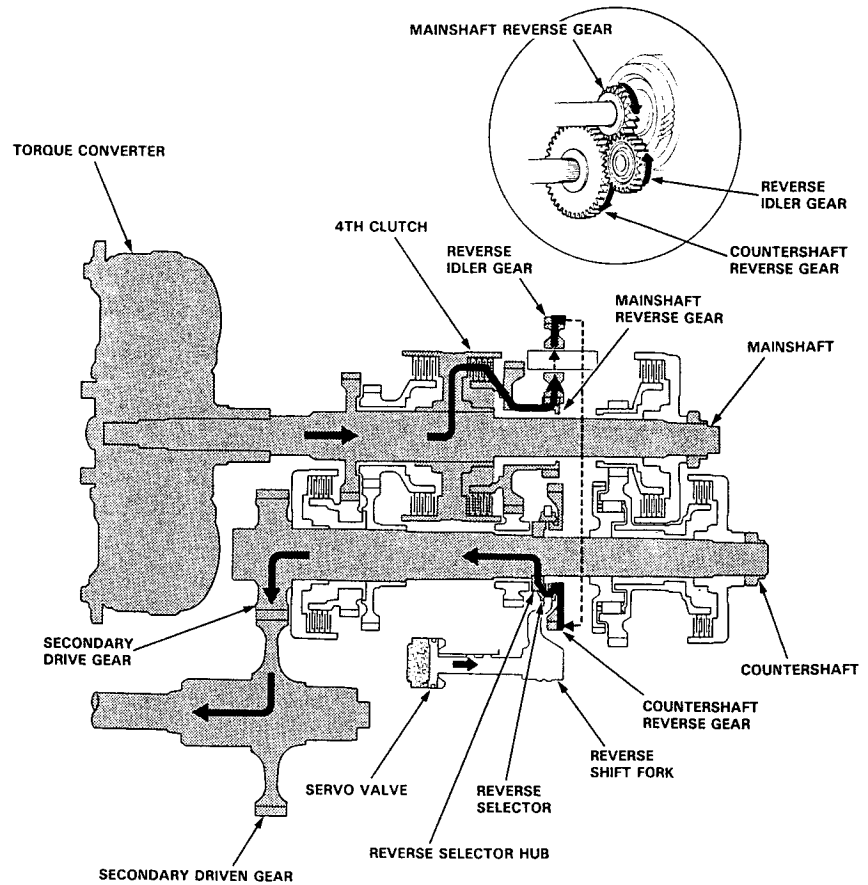

Description

Electronic Control System

Electronic Control System
The electronic control system consists of the Transmission Control Module (TCM), sensors, a linear solenoid and four solenoid valves. Shifting and lock-up are electronically controlled for comfortable driving under all conditions.
The TCM is located behind the glove box on the passenger's side.

Shift control
Shifting is related to engine torque through the linear solenoid used to operate throttle valve which is controlled by the TCM. Getting a signal from each sensor, the TCM determines the appropriate shift point and activates shift control solenoid valves A and/or B.
The combination of driving signals to shift control solenoid valves A and B is shown in the table below.

Shift control solenoid valve / Position (gear)	A	B
1 (1ST)	ON	OFF
2 (2ND)	OFF	OFF
D4 D3 (1ST)	OFF	ON
D4 D3 (2ND)	ON	ON
D4 D3 (3RD)	ON	OFF
D4 (4TH)	OFF	OFF
R (REVERSE)	OFF	OFF

Lock-up control
From sensor input signals, the TCM determines whether to turn the lock-up ON or OFF and activates lock-up control solenoid valve A and/or B accordingly.
The combination of driving signals to lock-up control solenoid valves A and B is shown in the table below.

Lock-up Control Solenoid Valve / Lock-up condition	A	B
Lock-up OFF	OFF	OFF
Lock-up, slight	ON	OFF
Lock-up, half	ON	ON
Lock-up, full	ON	ON
Lock-up during deceleration	ON	Duty operation OFF ⟶ ON

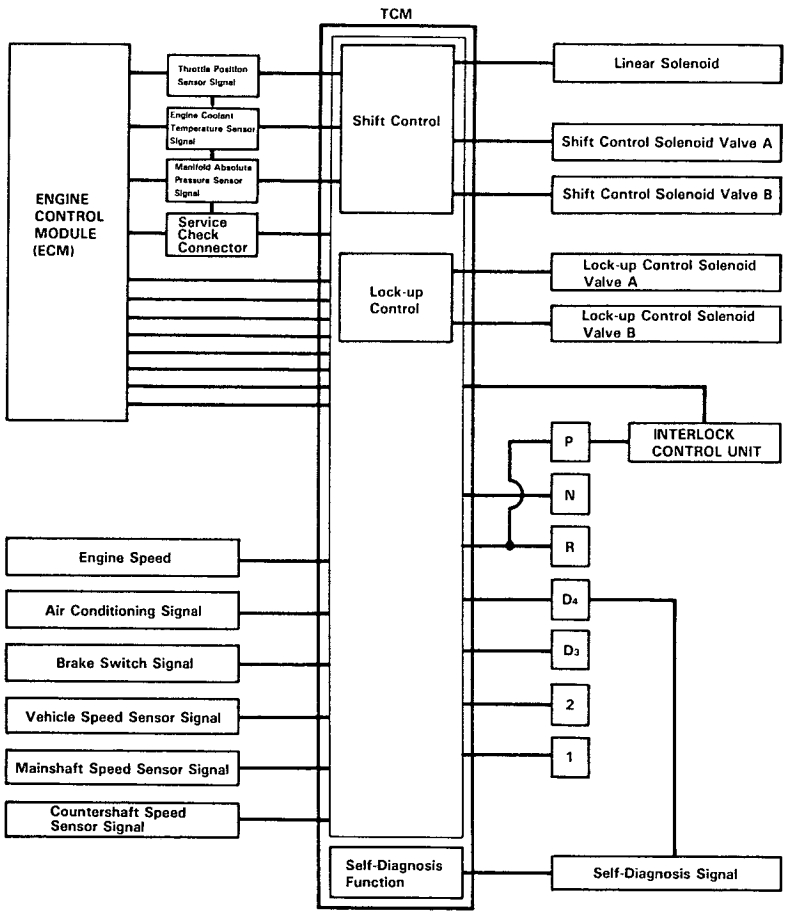

(cont'd)

Description

- Electrical Control System (cont'd)

Circuit Diagram and Terminal Location

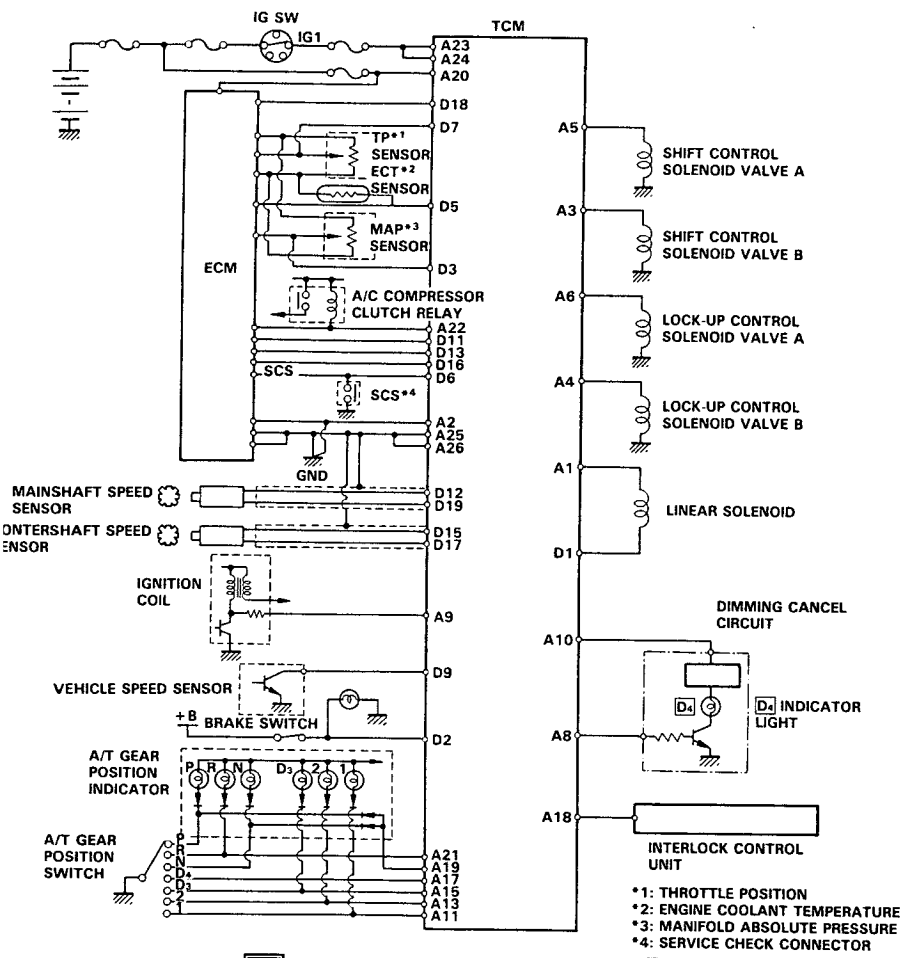

A1	A3	A5		A9	A11	A13	A15	A17	A19	A21	A23	A25
A2	A4	A6	A8	A10				A18	A20	A22	A24	A26

D1	D3	D5	D7	D9	D11	D13	D15	D17	D19	
D2		D6			D12		D16	D18		

TCM Terminal Location

Hydraulic Control

The valve bodies include the main valve body, servo body, oil pump body, regulator valve body, throttle valve body, and 2nd accumulator body.
The oil pump is driven by splines behind the torque converter which is attached to the engine. The oil flows through the regulator valve to maintain specified pressure through the main valve body to the manual valve, directing pressure to each of the clutches.

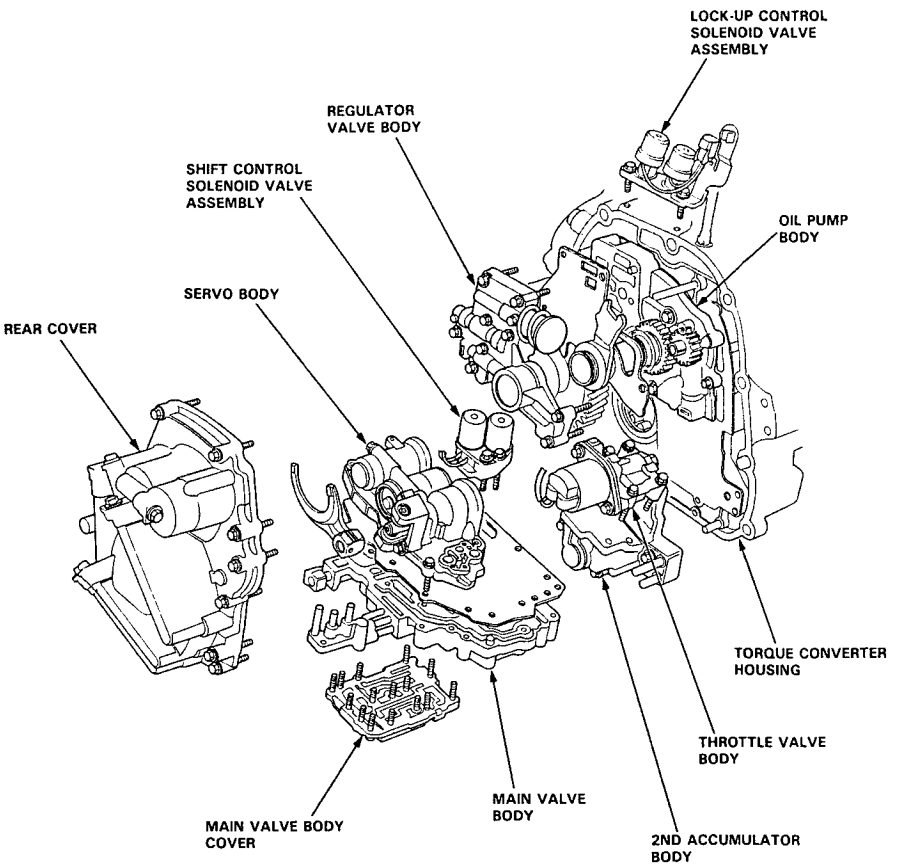

(cont'd)

Description

Hydraulic Control (cont'd)

Rear Cover
The 1st accumulator and 1st-hold accumulator are assembled in the rear cover.

Lower Valve Body Assembly
The lower valve body assembly is located on the bottom of the transmission.
The lower valve body assembly consists of the main valve body, servo body, shift control solenoid valves A/B and ATF strainer.

Servo Body
The servo body is assembled on the main valve body.
The servo valve which is integrated with the shift fork, 3rd accumulator, and 4th accumulator are all built into the servo body.
The shift fork installed on the end of the shift fork shaft operates the reverse selector.

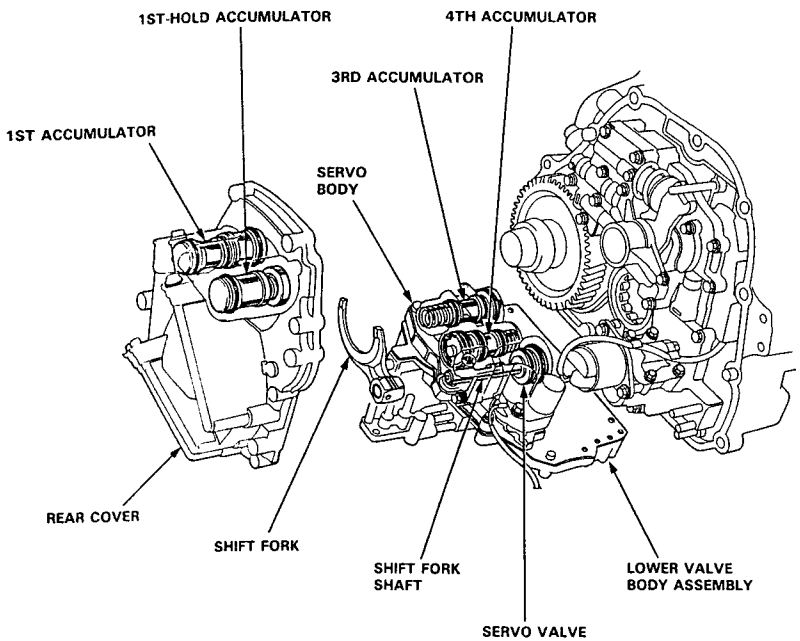

Main Valve Body
The manual valve, 1–2 shift valve, 2–3 shift valve, 3–4 shift valve, 2–3 orifice control valve, 3–4 orifice control valve, 4th exhaust valve, servo control valve, CPC valve, 3rd kick-down valve, and 4th kick-down valve are all built into the main valve body.
The primary function of this valve body is switching oil passages on and off and controlling the hydraulic pressure going to the hydraulic control system.

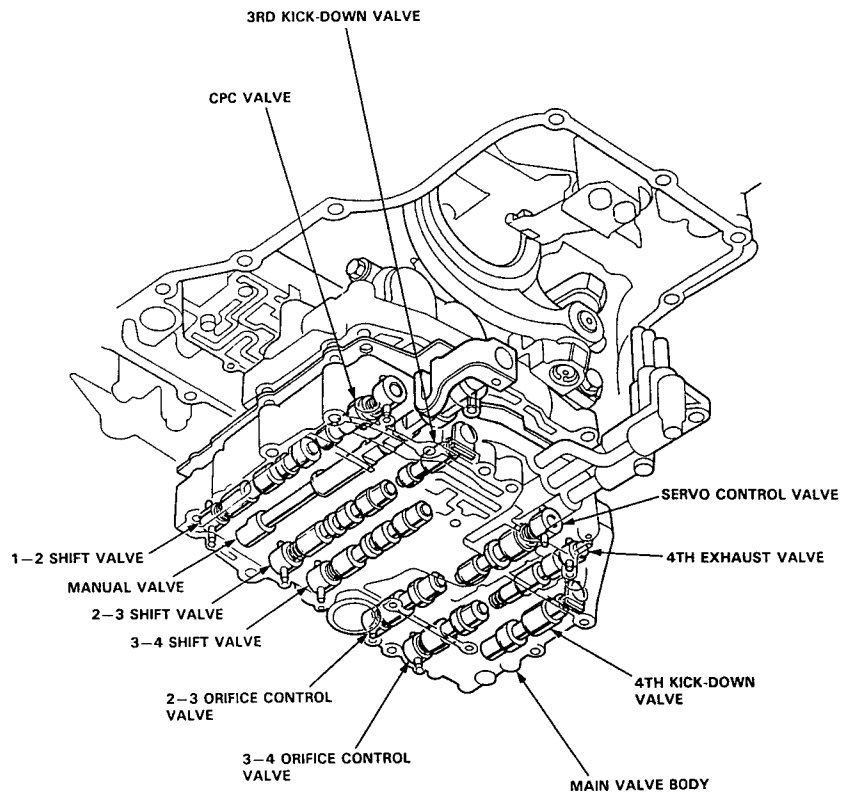

(cont'd)

Regulator Valve Body
The regulator valve body is located on the oil pump body. The regulator valve body consists of the lock-up shift valve, cooler relief valve and regulator valve.

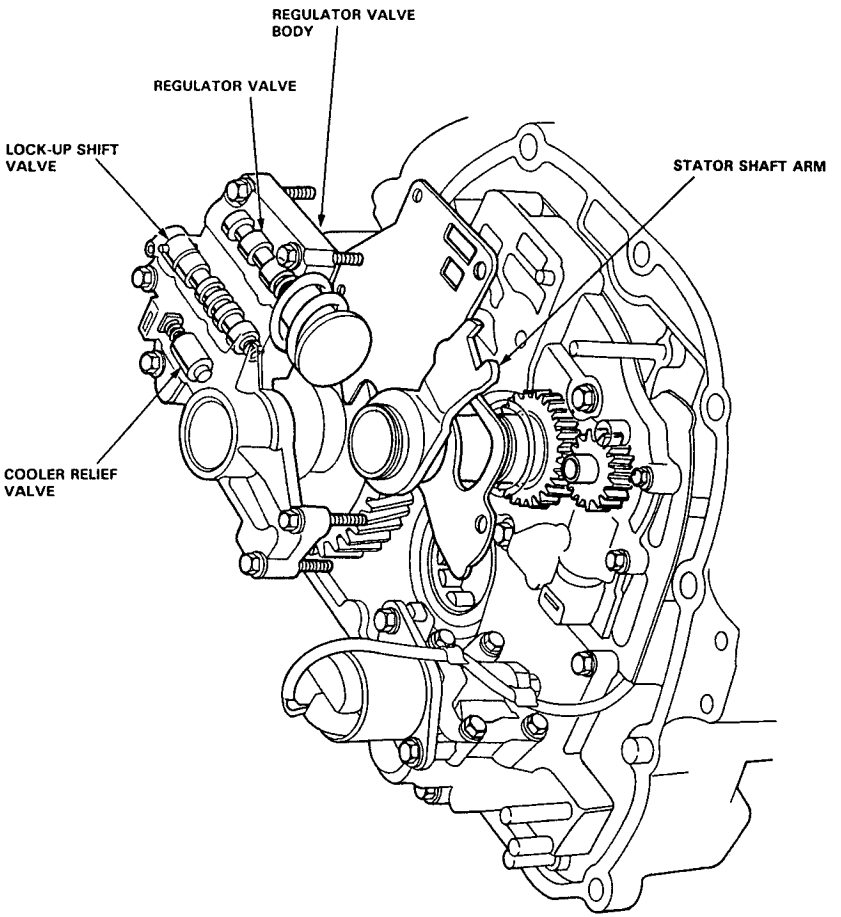

Regulator Valve
The regulator valve maintains a constant hydraulic pressure from the oil pump to the hydraulic control system, while also furnishing oil to the lubricating system and torque converter.
Oil flows through B and B'. The oil which enters through B flows through the valve orifice to A, pushing the regulator valve to the right. According to the level of hydraulic pressure through B, the position of the valve changes, and the amount of the oil through B' from D also changes. This operation is continued, maintaining line pressure.

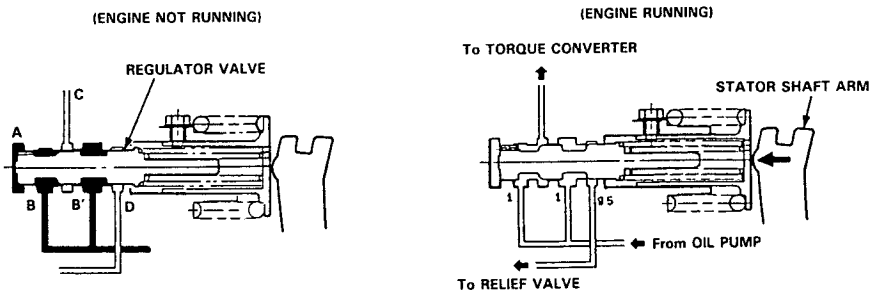

Stator Reaction Hydraulic Pressure Control
Hydraulic pressure increase according to torque is performed by the regulator valve using stator torque reaction. The stator shaft is splined to the stator and its arm end contacts the regulator spring cap. When the car is accelerating or climbing (Torque Converter Range), stator torque reaction acts on the stator shaft and the stator shaft arm pushes the regulator spring cap in this ➡ direction in proportion to the reaction. The stator reaction spring compresses and the regulator valve moves to increase the regulated control pressure or line pressure. Line pressure is maximum when the stator reaction is maximum.

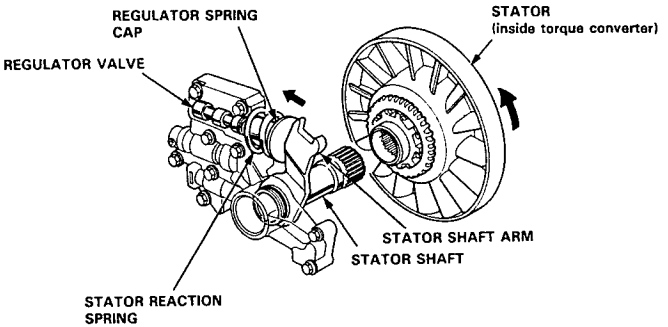

(cont'd)

Description

Hydraulic Control (cont'd)

Oil Pump Body
The oil pump body is located behind the torque converter housing. The oil pump body consists of the oil pump gears, lock-up control valve, lock-up timing valve, and relief valve. The torque converter check valve is located under the oil pump body.

Throttle Valve Body
The throttle valve body is located on the 2nd accumulator body. The throttle valve body assembly includes the throttle valve and linear solenoid. The linear solenoid which is controlled by the TCM operates the throttle valve.

2nd Accumulator Body
The 2nd accumulator body consists of the 2nd accumulator.

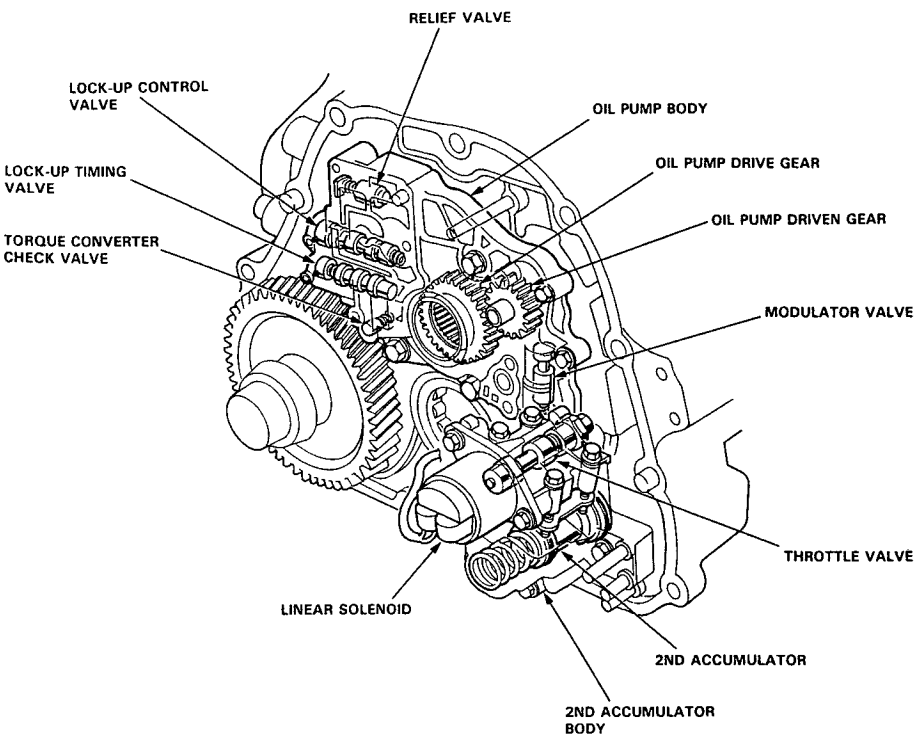

Hydraulic Flow

General chart of Hydraulic Pressure

Oil Pump → Regulator Valve → { Line Pressure / Torque converter Pressure / Lubrication Pressure }

Distribution of Hydraulic pressure

- Manual Valve → To Select Line Pressure
- Throttle Valve → Throttle B Pressure
- 1-2 Shift Valve / 2-3 Shift Vavle / 3-4 Shift Valve → Clutch Pressure

NO.	DESCRIPTION OF PRESSURE	NO.	DESCRIPTION OF PRESSURE	NO.	DESCRIPTION OF PRESSURE
1	LINE	15	1ST-HOLD CLUTCH	55	THROTTLE B
2	LINE	16	1ST-HOLD CLUTCH	56	THROTTLE B
3	LINE	18	LINE	90	TORQUE CONVERTER
3'	LINE	20	2ND CLUTCH	91	TORQUE CONVERTER
3''	LINE	21	2ND CLUTCH	92	TORQUE CONVERTER
4	LINE	22	2ND CLUTCH	93	OIL COOLER
4'	LINE	25	LINE	94	TORQUE CONVERTER
4''	LINE	30	3RD CLUTCH	95	LUBRICATION
5	LINE	31	3RD CLUTCH	96	TORQUE CONVERTER
6	MODULATOR	32	3RD CLUTCH	99	SUCTION
6'	MODULATOR (DUTY CONTROL)	40	4TH CLUTCH	X	BLEED
9	LINE	41	4TH CLUTCH		
10	1ST CLUTCH	42	4TH CLUTCH		

(cont'd)

Description

Hydraulic Flow

N Position

As the engine turns, the oil pump also starts to operate. Automatic transmission fluid (ATF) is drawn from (99) and discharged into (1). Then, hydraulic pressure is controlled by the regulator valve and becomes line pressure (1). The torque converter inlet pressure (92) enters (94) of torque converter through the orifice and discharges into (90).
The torque converter check valve prevents the torque converter pressure from rising.
Under this condition, hydraulic pressure is not applied to the clutches.

NOTE:
- When used, "left" or "right" indicates direction on the flowchart.
- SOL-Ⓐ: Shift Control Solenoid Valve A
- SOL-Ⓑ: Shift Control Solenoid Valve B
- SOL-Ⓒ: Lock-up Control Solenoid Valve A
- SOL-Ⓓ: Lock-up Control Solenoid Valve B

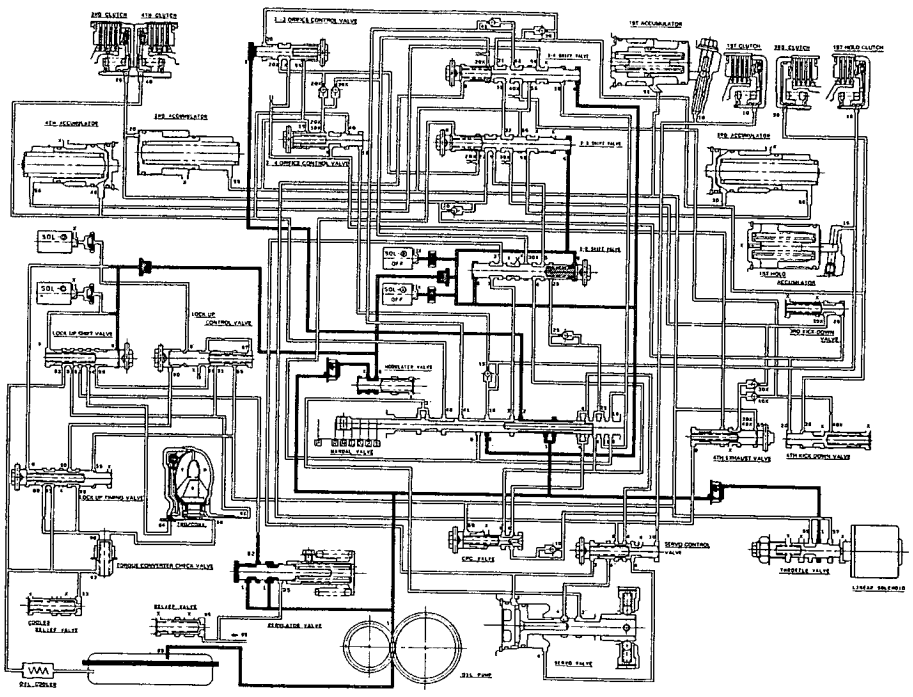

1 Position

The line pressure (1) becomes the line pressure (4), (18), (25) as it passes through the manual valve. Also, the line pressure (1) goes to the modulator valve through the filter and becomes the modulator pressure (6). The modulator pressure (6) is supplied to the 1-2 shift valve and 2-3 shift valve. The 1-2 and 2-3 shift valves are moved to the left side because the shift control solenoid valve A is turned ON and B is turned OFF by the TCM. The line pressure (18) is supplied to the 3-4 shift valve, and it is moved to the left side. The line pressure (4) becomes the 1st clutch pressure (10) via the orifice, then the 1st clutch is engaged. The 1st clutch pressure (10) is also supplied to the servo control valve.
The line pressure (4) becomes the 1st-hold clutch pressure (16) via the 1-2 shift valve, 2-3 shift valve, 3-4 shift valve, manual valve and orifice, then the 1st-hold clutch is engaged.

NOTE:
- When used, "left" or "right" indicates direction on the flowchart.
- SOL-Ⓐ: Shift Control Solenoid Valve A
- SOL-Ⓑ: Shift Control Solenoid Valve B
- SOL-Ⓒ: Lock-up Control Solenoid Valve A
- SOL-Ⓓ: Lock-up Control Solenoid Valve B

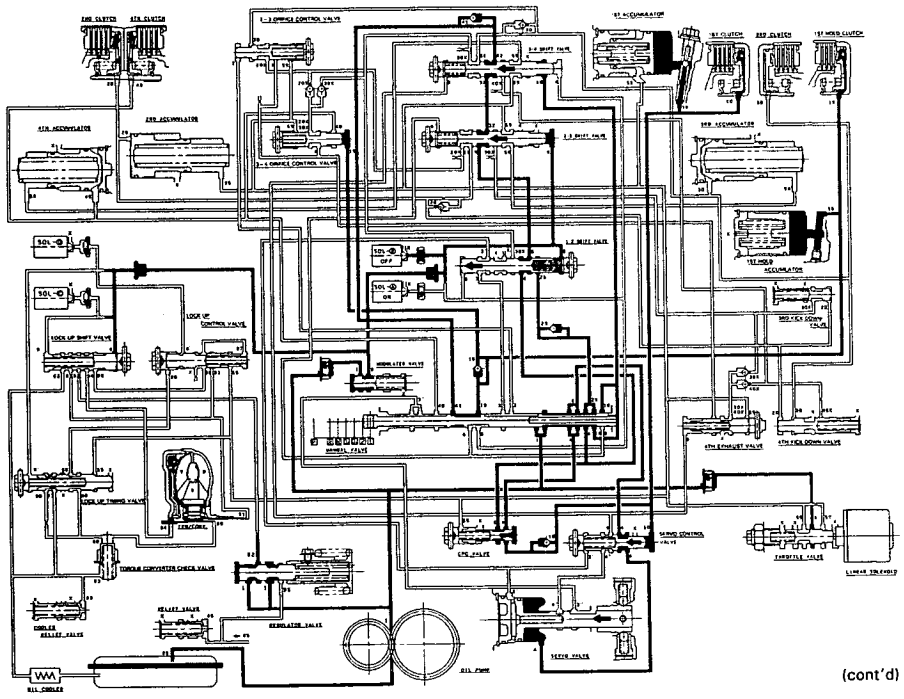

(cont'd)

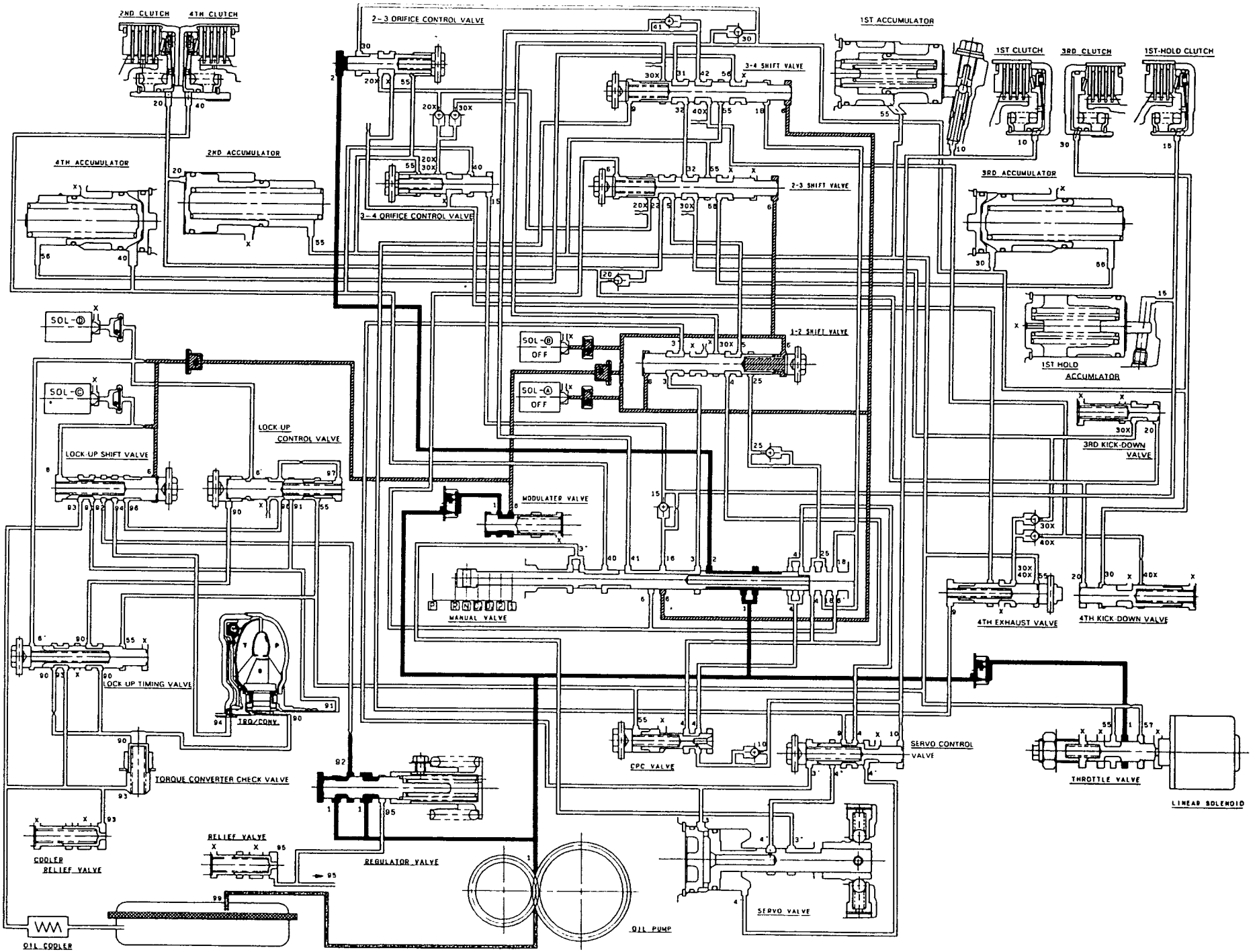
2ND CLUTCH
4TH CLUTCH
2-3 ORIFICE CONTROL VALVE
1ST ACCUMULATOR
1ST CLUTCH
3RD CLUTCH
1ST-HOLD CLUTCH
3-4 SHIFT VALVE
4TH ACCUMULATOR
2ND ACCUMULATOR
3-4 ORIFICE CONTROL VALVE
2-3 SHIFT VALVE
3RD ACCUMULATOR
SOL-B
SOL-B OFF
SOL-A OFF
SOL-C
1-2 SHIFT VALVE
1ST HOLD ACCUMULATOR
LOCK UP CONTROL VALVE
LOCK UP SHIFT VALVE
3RD KICK-DOWN VALVE
MODULATER VALVE
MANUAL VALVE
4TH EXHAUST VALVE
4TH KICK DOWN VALVE
LOCK UP TIMING VALVE
TRQ/CONV.
TORQUE CONVERTER CHECK VALVE
CPC VALVE
SERVO CONTROL VALVE
THROTTLE VALVE
LINEAR SOLENOID
COOLER RELIEF VALVE
RELIEF VALVE
REGULATOR VALVE
OIL PUMP
SERVO VALVE
OIL COOLER

Description

Hydraulic Flow (cont'd)

2 Position

The line pressure (1) becomes the line pressure (4), (25) as it passes through the manual valve.
Also, the line pressure (1) goes to the modulator valve and becomes the modulator pressure (6). The modulator pressure (6) is supplied to each shift valve. The 1-2 shift valve is held in the left side; the 2-3 shift valve is held in the right side; the 3-4 shift valve is moved to left side because the shift control solenoid valves A and B are turned on OFF by the TCM.
The line pressure (4) becomes the line pressure (5) via the 1-2 shift valve, then the line pressure (5) becomes the 2nd clutch pressure (22) via the 2-3 shift valve. The 2nd clutch pressure (22) becomes the 2nd clutch pressure (20) via the orifice, and goes to the 2nd clutch, then the 2nd clutch is engaged.
The line pressure (1) also flows to the throttle valve.
The line pressure (4) also becomes the 1st clutch pressure (10) and flows to the 1st clutch and the servo control valve. However, no power is transmitted from the 1st clutch by means of the one-way clutch.

NOTE:
- When used, "left" or "right" indicates direction on the flowchart.
- SOL-Ⓐ: Shift Control Solenoid Valve A
- SOL-Ⓑ: Shift Control Solenoid Valve B
- SOL-Ⓒ: Lock-up Control Solenoid Valve A
- SOL-Ⓓ: Lock-up Control Solenoid Valve B

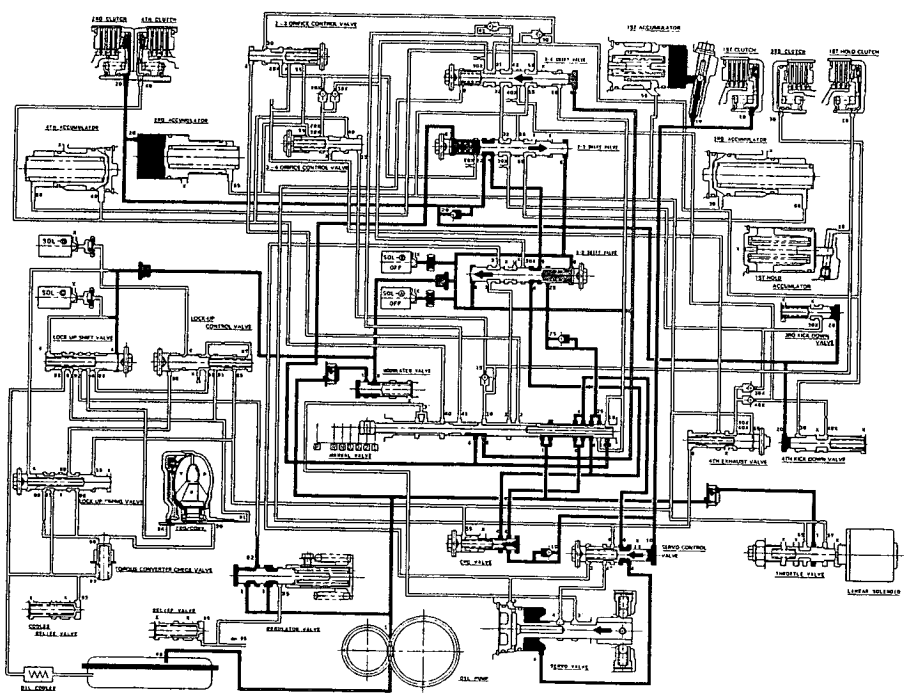

D4 or D3 Position

1. 1st speed
   The flow of fluid through the torque converter is same as in N position. The line pressure (1) becomes the line pressure (4) and it becomes the 1st clutch pressure (10). The 1st clutch pressure (10) is applied to the 1st clutch and the 1st accumulator, consequently the vehicle will moved as the engine power is transmitted. And the line pressure (4) also goes to the 1-2 shift valve via the CPC valve. But the line pressure (4) is intercepted by the 1-2 shift valve in 1st speed.
   The line pressure (1) becomes the modulator pressure (6) by the modulator valve and travels to the 1-2 and 3-4 shift valves. The 1-2 shift valve is moved to the right side because the shift control solenoid valve A is turned OFF and B is turned ON by the TCM.
   The line pressure (1) also flows to the throttle valve.

NOTE:
- When used, "left" or "right" indicates direction on the flowchart.
- SOL-Ⓐ: Shift Control Solenoid Valve A
- SOL-Ⓑ: Shift Control Solenoid Valve B
- SOL-Ⓒ: Lock-up Control Solenoid Valve A
- SOL-Ⓓ: Lock-up Control Solenoid Valve B

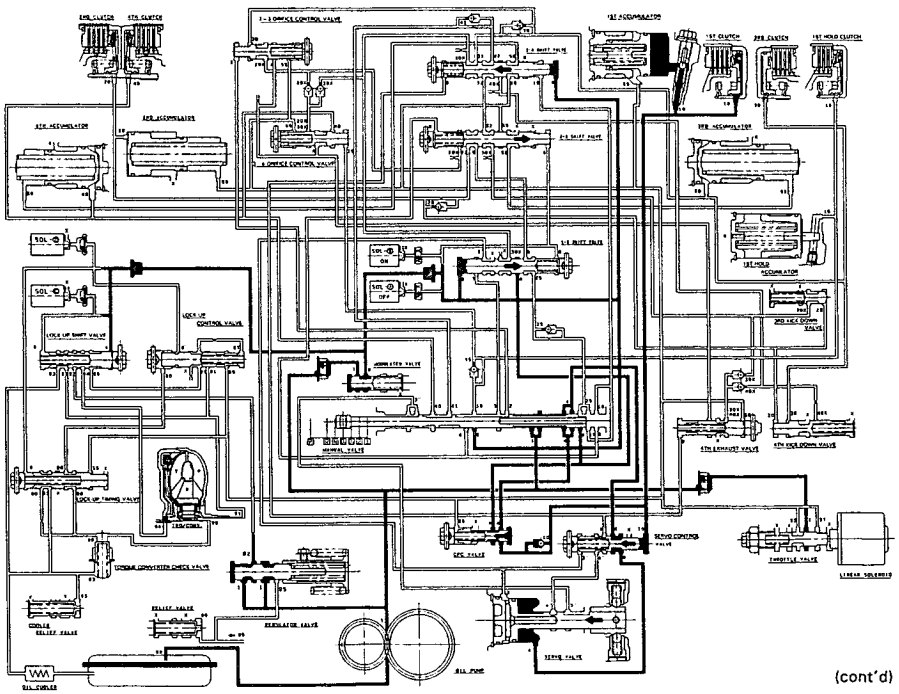

(cont'd)

Description

Hydraulic Flow (cont'd)

2. 2nd speed

As the speed of the car reaches the prescribed value, the shift control solenoid valve A is turned ON by the TCM, and the shift control solenoid valve B remains ON. As a result, the 1-2 shift valve is moved to the left side and uncovers the port leading the line pressure (4) to the 2-3 shift valve. The line pressure (4) up to the 1-2 shift valve is the same as in the 1st speed. Then the line pressure (4) becomes the line pressure (5). The line pressure (5) goes to the 2-3 shift valve, and becomes the 2nd clutch pressure (22). The 2nd clutch pressure (22) becomes the 2nd clutch pressure (20) via the orifice, and goes to the 2nd clutch, then the 2nd clutch is engaged.

Hydraulic pressure also flows to the 1st clutch. However, no power is transmitted by means of the one-way clutch.

NOTE:
- When used, "left" or "right" indicates direction on the flowchart.
- SOL-Ⓐ: Shift Control Solenoid Valve A
- SOL-Ⓑ: Shift Control Solenoid Valve B
- SOL-Ⓒ: Lock-up Control Solenoid Valve A
- SOL-Ⓓ: Lock-up Control Solenoid Valve B

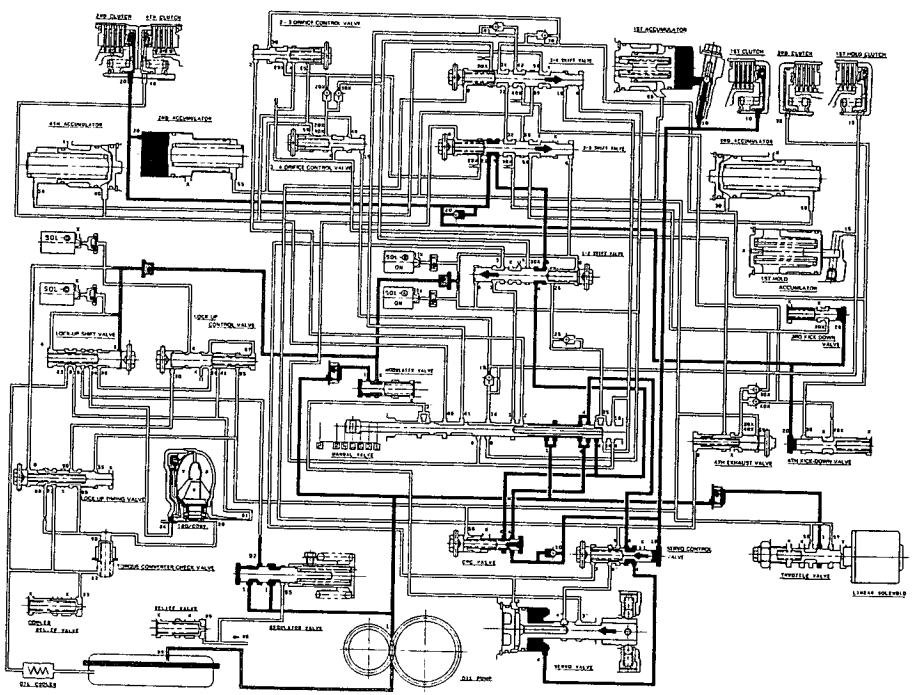

3. 3rd speed

As the speed of the car reaches the prescribed value, the shift control solenoid valve B is turned OFF by the TCM, and the shift control solenoid valve A remains ON. As a result, the 2-3 shift valve is moved to the left side and uncovers the port leading the line pressure (5) from the 1-2 shift valve to the 3-4 shift valve. The line pressure (4) up to the 1-2 shift vlave is the same as in the 1st and 2nd speed. Then the line pressure (5) becomes the 3rd clutch pressure (30) by way of 2-3 shift valve, 3-4 shift valve and orifice, and goes to the 3rd clutch, then the 3rd clutch is engaged.

Hydraulic pressure also flows to the 1st clutch. However, no power is transmitted by means of the one-way clutch.

NOTE:
- When used, "left" or "right" indicates direction on the flowchart.
- SOL-Ⓐ: Shift Control Solenoid Valve A
- SOL-Ⓑ: Shift Control Solenoid Valve B
- SOL-Ⓒ: Lock-up Control Solenoid Valve A
- SOL-Ⓓ: Lock-up Control Solenoid Valve B

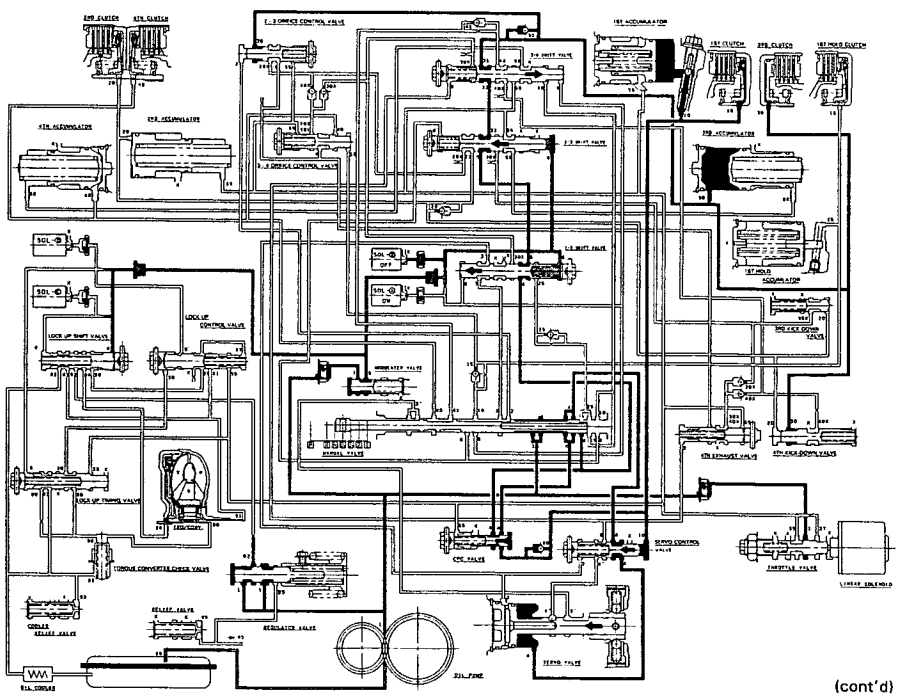

(cont'd)

Description

– Hydraulic Flow (cont'd)

4. 4th speed

As the speed of the car reaches the prescribed value, the shift control solenoid valve A is turned OFF by the TCM. The shift control solenoid valve B remains OFF as in the 3rd speed. Since the 1-2 and 2-3 shift valves are kept on the left side. The flow of fluid up to the 1-2, 2-3 and 3-4 shift valves is same as in the 3rd speed.

The 3-4 shift valve is moved to the left side and uncovers the port leading to the 4th clutch. The 4th clutch pressure (42) as it passes through the 3-4 shift valve become the 4th clutch pressure (40) via the manual valve, and goes to the 4th clutch. Then the 4th clutch is engaged.

Hydraulic pressure also flows to the 1st clutch. However, no power is transmitted by means of the one-way clutch.

NOTE:
- When used, "left" or "right" indicates direction on the flowchart.
- SOL-Ⓐ: Shift Control Solenoid Valve A
- SOL-Ⓑ: Shift Control Solenoid Valve B
- SOL-Ⓒ: Lock-up Control Solenoid Valve A
- SOL-Ⓓ: Lock-up Control Solenoid Valve B

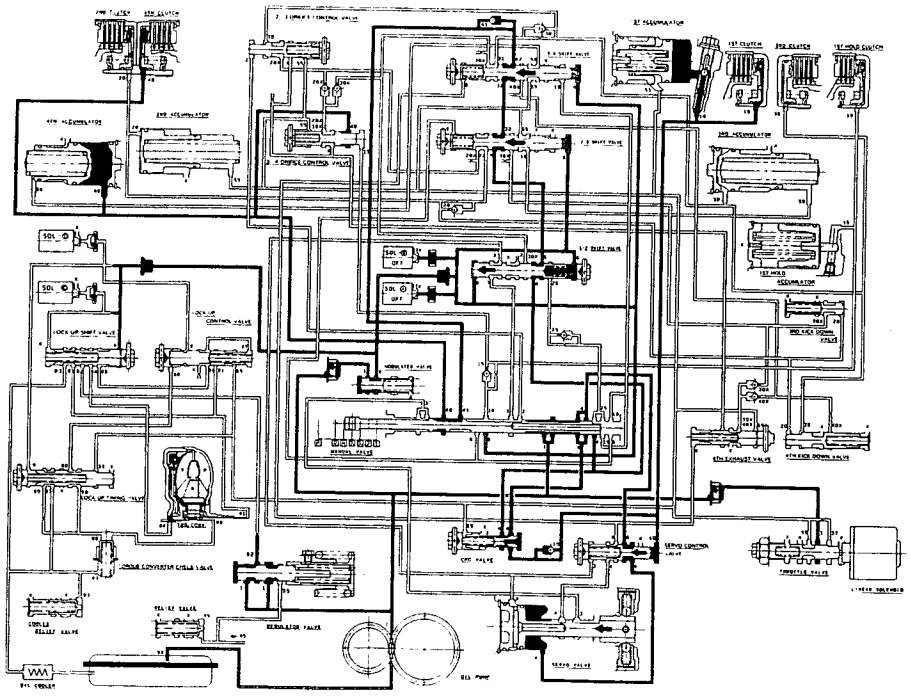

R Position

The flow of fluid through the torque converter circuit is the same as in the N position. The line pressure (1) becomes the line pressure (3) as it passes the manual valve . It then flows through the 1-2 shift valve to the servo valve and servo control valve, causing the shift fork shaft to be moved to the reverse position.
The 1-2, 2-3 and 3-4 shift valves are moved to the left side because the shift control solenoid valve A and B are turned OFF by the TCM as in the D4 position in the 4th speed. The line pressure (3') passed through the servo valve becomes the 4th clutch pressure (40) via the manual valve, then it goes to the 4th clutch; the power is transmitted through the 4th clutch.

Reverse Inhibitor Control

When the R position is selected while the vehicle is moving forward at more than a certain speed, the TCM outputs 1st speed signal (shift control solenoid valve A: OFF, B: ON), and the 1-2 shift valve is moved to the right side. The line pressure (3) is intercepted by the 1-2 shift valve; consequently, the power is not transmitted, since the 4th clutch and servo valve are not operated.

NOTE:
- When used, "left" or "right" indicates direction on the flowchart.
- SOL-Ⓐ: Shift Control Solenoid Valve A
- SOL-Ⓑ: Shift Control Solenoid Valve B
- SOL-Ⓒ: Lock-up Control Solenoid Valve A
- SOL-Ⓓ: Lock-up Control Solenoid Valve B

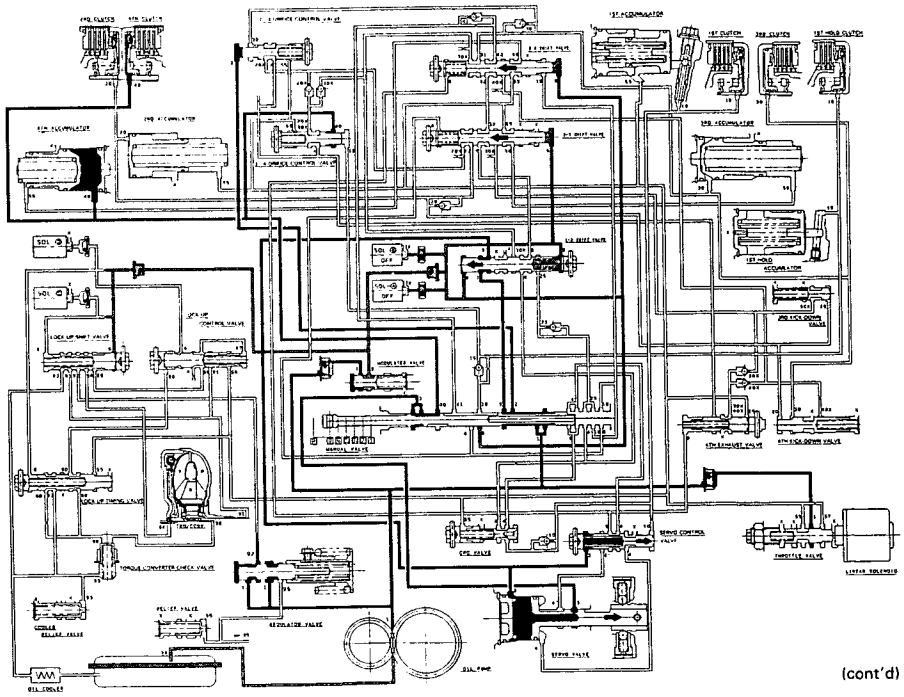

(cont'd)

Description

Hydraulic Flow (cont'd)

P Position

The flow of fluid through the torque converter circuit is the same as in the N position. The line pressure (1) becomes the line pressure (3) as it passes the manual valve . The line pressure (3) flows through the 1-2 shift valve to the servo valve and the servo control valve, causing the shift fork shaft to be moved to the reverse position as in the R position. However, the hydraulic pressure is not supplied to the clutches. The power is not transmitted.

NOTE:
- When used, "left" or "right" direction on the flowchart
- SOL-Ⓐ: Shift Control Solenoid Valve A
- SOL-Ⓑ: Shift Control Solenoid Valve B
- SOL-Ⓒ: Lock-up Control Solenoid Valve A
- SOL-Ⓓ: Lock-up Control Solenoid Valve B

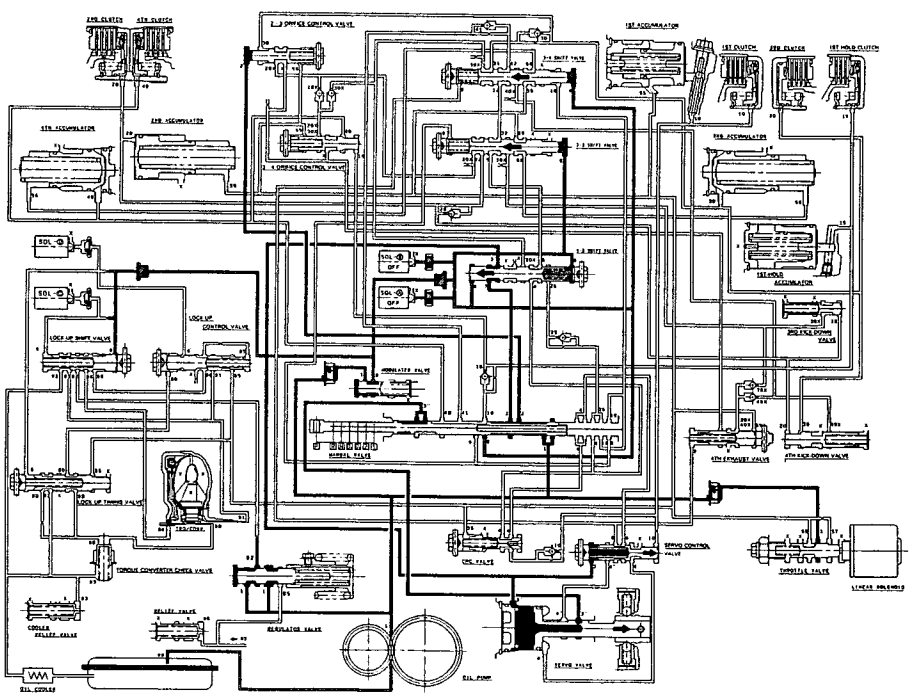

Lock-up System

In D4 position in 2nd, 3rd and 4th, and D3 position in 3rd, pressurized fluid is drained from the back of the torque converter through an oil passage, causing the lock-up piston to be held against the torque converter cover. As this takes place, the mainshaft rotates at the same speed as the engine crankshaft. Together with hydraulic control, the TCM optimizes the timing of the lock-up system. Under certain conditions, the lock-up operation is applied during deceleration, in 3rd and 4th speed.

The lock-up shift valve controls the range of lock-up according to lock-up control solenoid valves A and B, and the throttle valve. When lock-up control solenoid valves A and B activate, modulator pressure changes. Lock-up control solenoid valves A and B are mounted on the torque converter housing and are controlled by the TCM.

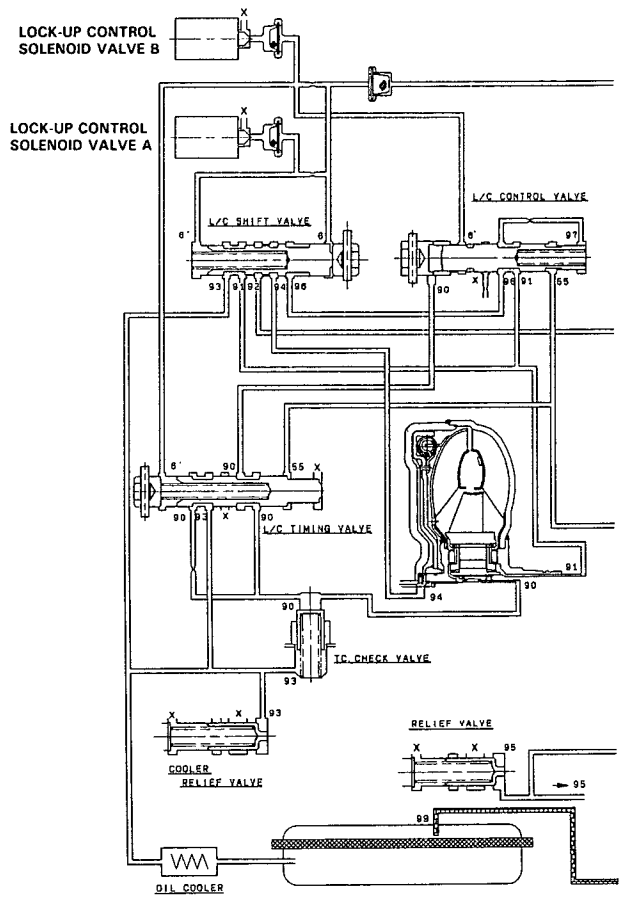

(cont'd)

Description

Lock-up System (cont'd)

No Lock-up

Pressured fluid regulated by the modulator works on both ends of the lock-up shift valve and on the left side of the lock-up control valve. Under this condition, the pressure on both ends of the lock-up shift valve are equal, and the lock-up shift valve is moved to the right side by the tension of the valve spring alone. The fluid from the oil pump will flow through the left side of the lock-up clutch to the torque converter; i.e., the lock-up clutch is in OFF condition.

NOTE: When used, "left" or "right" indicates direction on the flowchart.

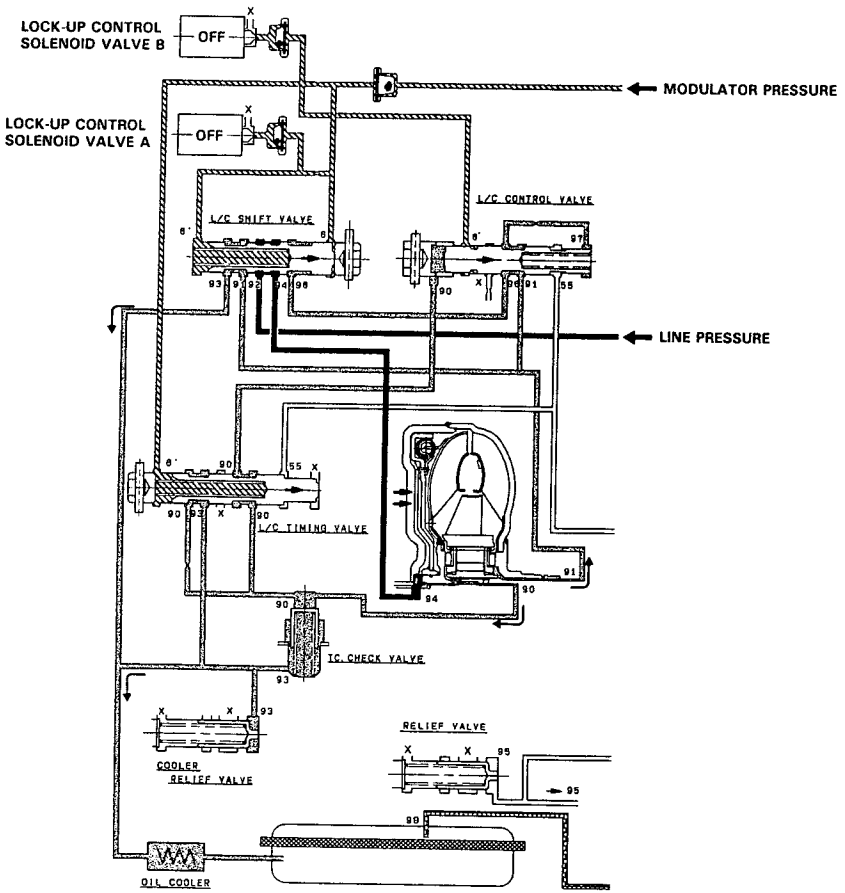

Partial Lock-up

Lock-up Control Solenoid Valve A: ON Lock-up Control Solenoid Valve B: OFF

The TCM switches the solenoid valve A to ON to release the modulator pressure in the left cavity of the lock-up shift valve. The modulator pressure in the right cavity of the lock-up shift valve overcomes the spring force, thus the lock-up shift valve is moved to the left side.

The torque converter pressure is separated into two passages:

Torque Converter Inner Pressure: enters into right side—to engage lock-up clutch.

Torque Converter Back Pressure: enters into left side—to disengage lock-up clutch.

The back pressure (F2) is regulated by the lock-up control valve, whereas the position of the lock-up timing valve is determined by the throttle B pressure, tension of the valve spring and pressure regulated by the modulator. Also the position of the lock-up control valve is determined by the throttle B pressure, torque converter back pressure and torque converter pressure regulated by the check valve. In low speed range, the throttle B pressure working on the right side of the lock-up control valve is low, causing the valve to be moved to the right side. With the lock-up control solenoid valve B kept OFF, the modulator pressure is maintained in the left side of the lock-up control valve; in other words, the lock-up control valve is moved slightly to the left side. This slight movement of the lock-up control valve causes the back pressure (F2) to be lowered slightly, resulting in partial lock-up.

NOTE: When used, "left" or "right" indicates direction on the flowchart.

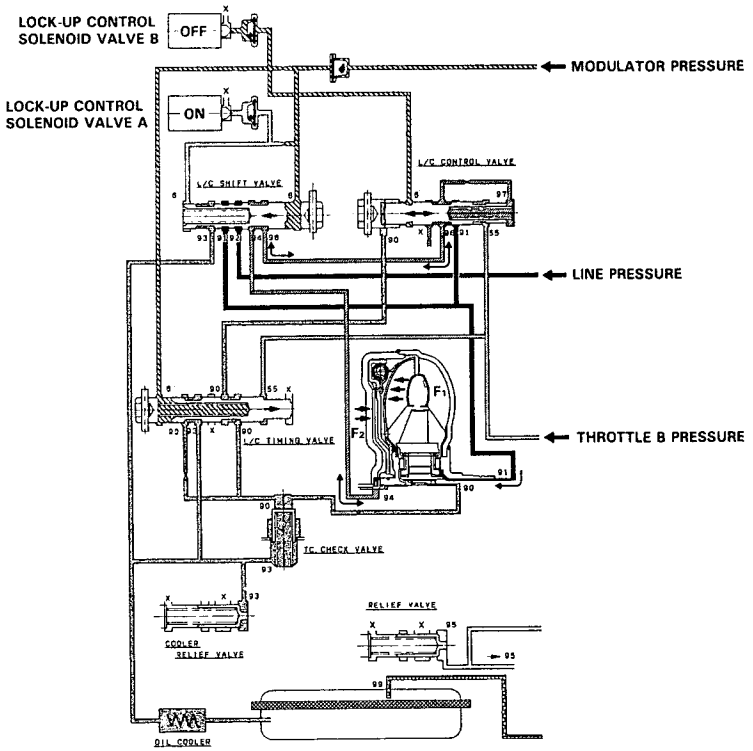

(cont'd)

Description

Lock-up System (cont'd)

Half Lock-up

Lock-up Control Solenoid Valve A: ON Lock-up Control Solenoid Valve B: ON

The modulator pressure is released by the solenoid valve B, causing the modulator pressure in the left cavity of the lock-up control valve to lower.

Also, the modulator pressure in the left cavity of the lock-up timing valve is low. However, the throttle B pressure is still low at this time, consequently the lock-up timing valve is kept on the right side by the spring force.

With the lock-up control solenoid valve B turned ON, the lock-up control valve is moved somewhat to the right side, causing the back pressure (F2) to lower. This allows a greater amount of the fluid (F1) to work on the lock-up clutch so as to engage the clutch. The back pressure (F2) which still exists prevents the clutch from engaging fully.

NOTE: When used, "left" or "right" indicates direction on the flowchart.

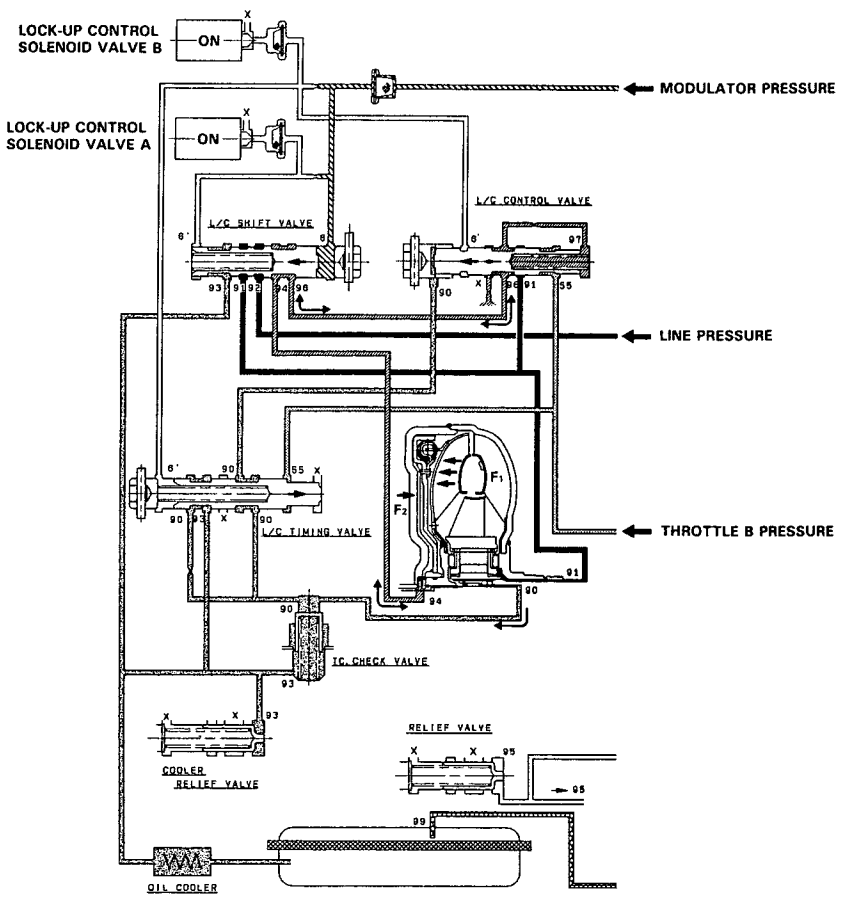

Full Lock-up

Lock-up Control Solenoid Valve A: ON Lock-up Control Solenoid Valve B: ON

When the vehicle speed further increases, the throttle B pressure is increased in accordance with the throttle opening. The lock-up timing valve overcomes the spring force and moves to the left side. Also this valve closes the oil port leading to the torque converter check valve.

Under this condition, the throttle B pressure working on the right side of the lock-up control valve becomes greater than that on the left end (modulator pressure in the left end has already been released by the solenoid valve B); i. e., the lock-up control valve is moved to the left side. As this happens, the torque converter back pressure is released fully, causing the lock-up clutch to be engaged fully.

NOTE: When used, "left" or "right" indicates direction on the flowchart.

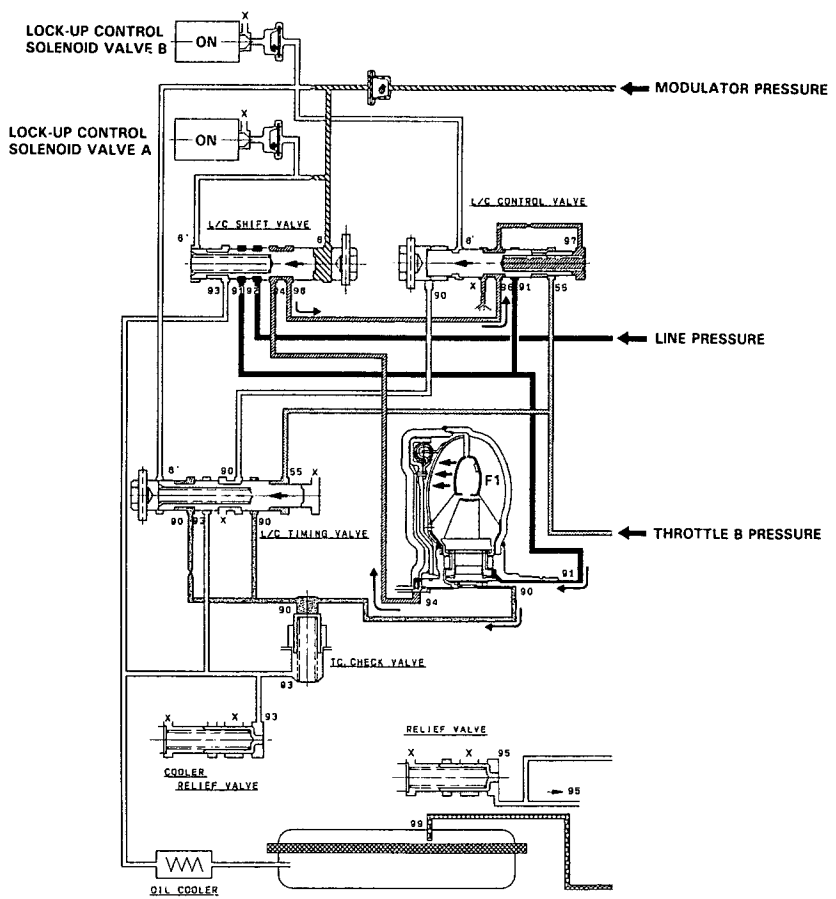

(cont'd)

Description

Lock-up System (cont'd)

Deceleration Lock-up

Lock-up Control Solenoid Valve A: ON Lock-up Control Solenoid Valve B: Duty Operation (ON ↔ OFF)

The TCM switches the solenoid valve B to ON and OFF alternately at high speeds under certain conditions. The slight lock-up and half lock-up regions are maintained so as to lock the torque converter properly.

NOTE: When used, "left" or "right" indicates direction on the flowchart.

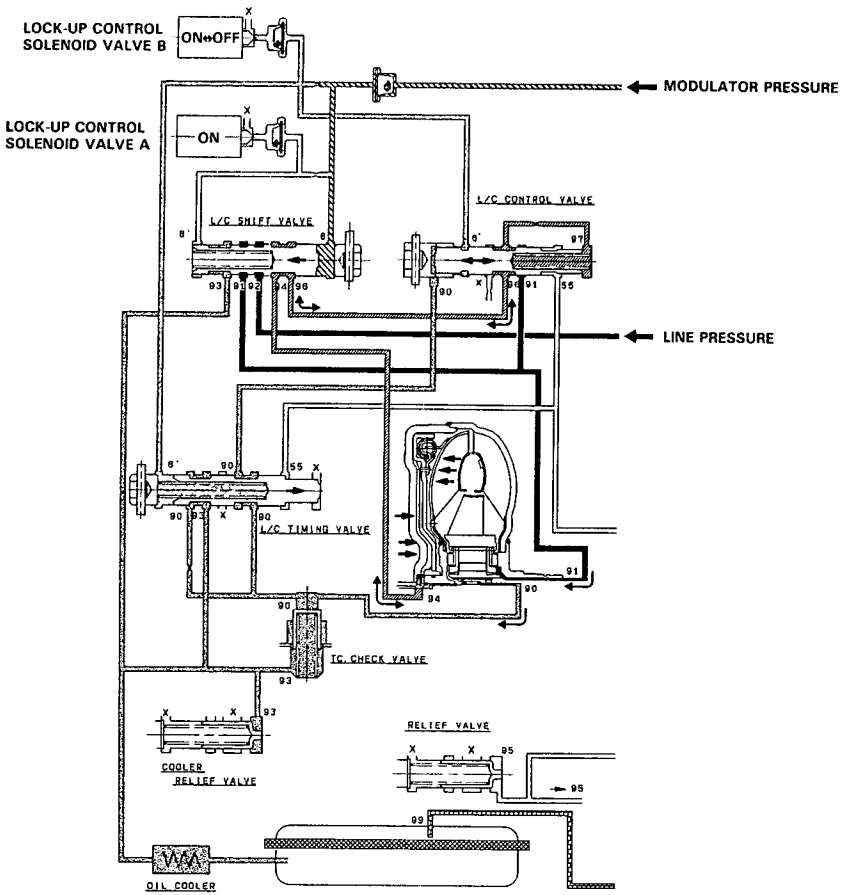

Parking Brake Mechanism

The parking brake mechanism locks the transmission by engaging the parking brake pawl into the parking gear which is splined to the countershaft.

Setting the select lever to [P] position causes the parking brake pawl roller (installed at the end of the parking brake shift arm) to press the parking brake pawl onto the parking gear. Even if the end of the parking brake pawl rides on top of the parking gear teeth, slight movement of the countershaft will cause the parking brake pawl and the parking gear to mesh with each other completely, because the parking brake shift arm receives tension from the parking brake shift arm spring. The parking brake pawl receives the tension (which acts to separate the parking brake pawl from the parking gear) from the parking pawl spring.

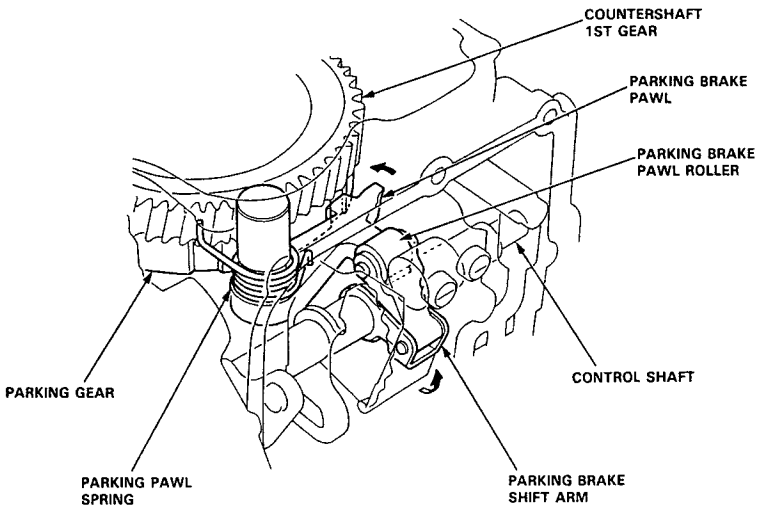

Circuit Diagram

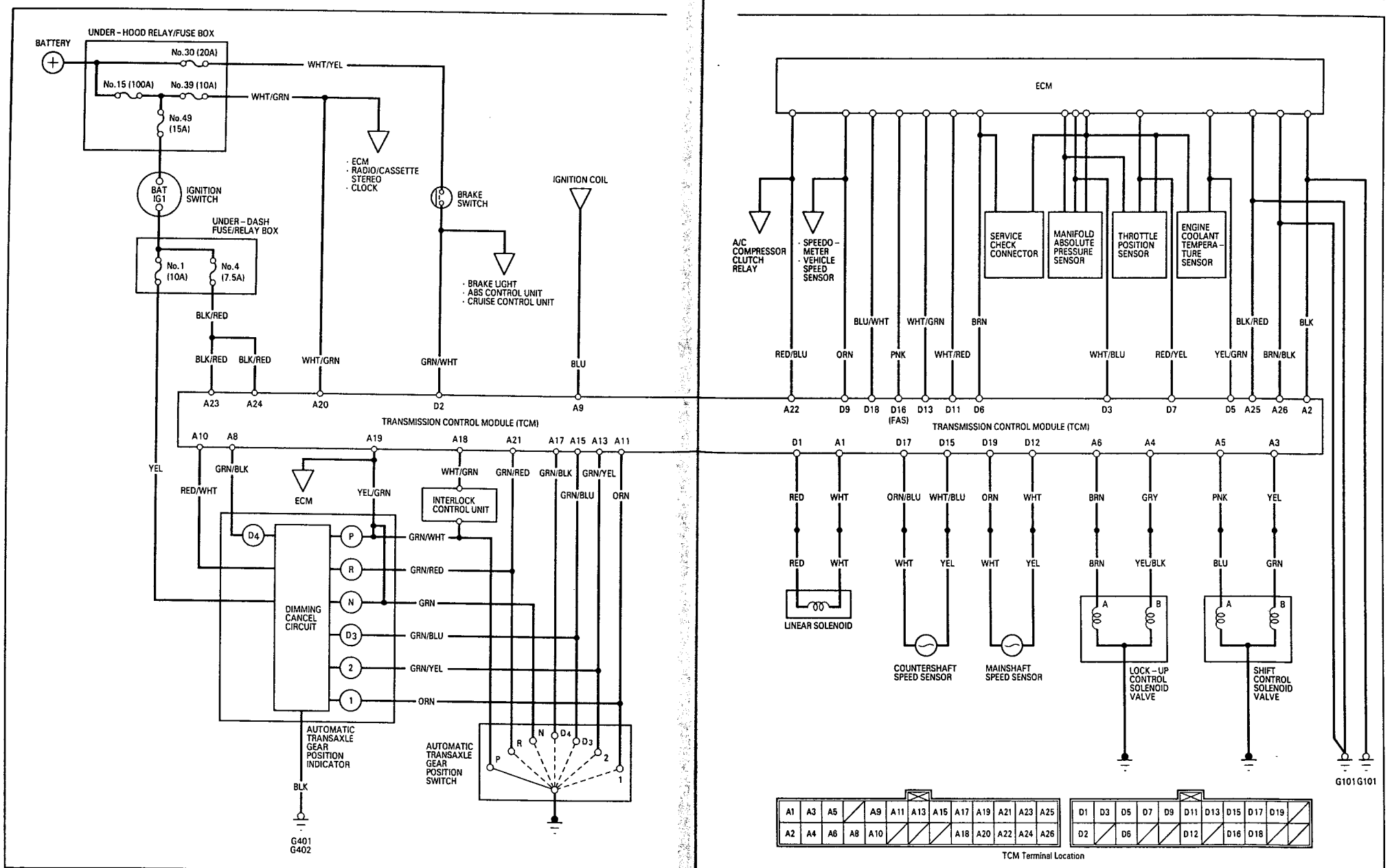

Component Location

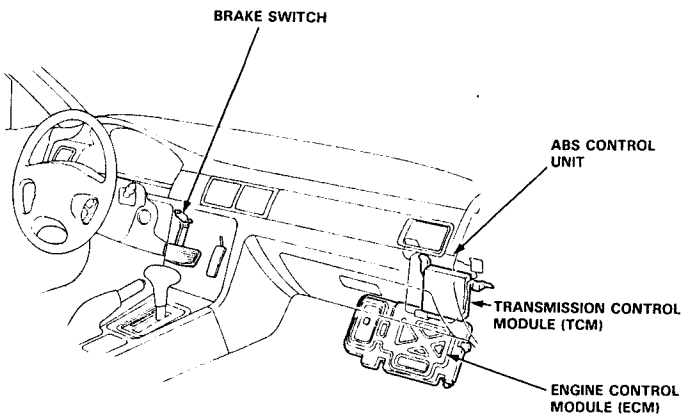

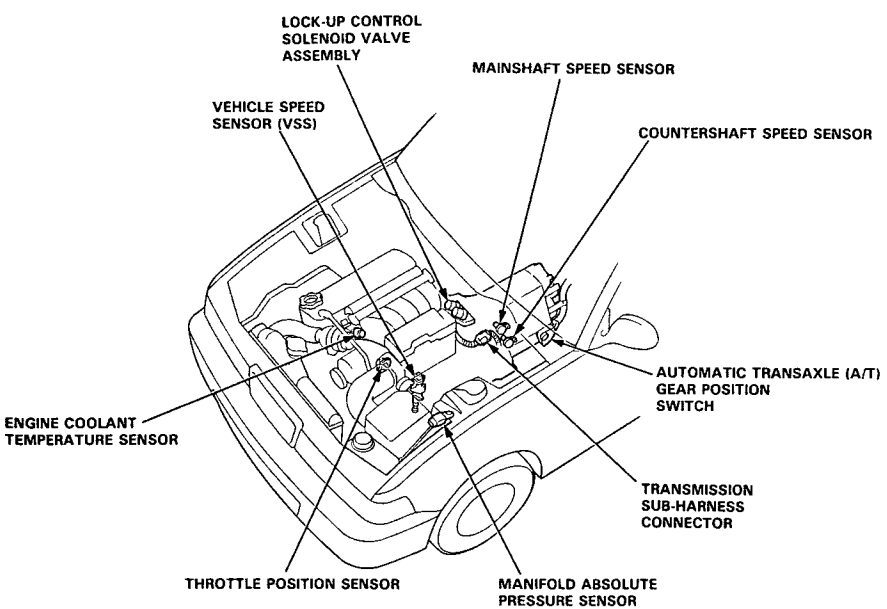

Troubleshooting Procedures

When the Transmission Control Module (TCM) senses an abnormality in the input or output systems, the D4 indicator light in the gauge assembly will blink. However, when the Service Check Connector (located under the dash on the passenger side) is connected with a jumper wire, the D4 indicator light will blink the Diagnostic Trouble Code (DTC) when the ignition switch is turned on.

When the D4 indicator light has been reported on, connect the two terminals of the Service Check Connector (2P) together. Then turn on the ignition switch and observe the D4 indicator light.

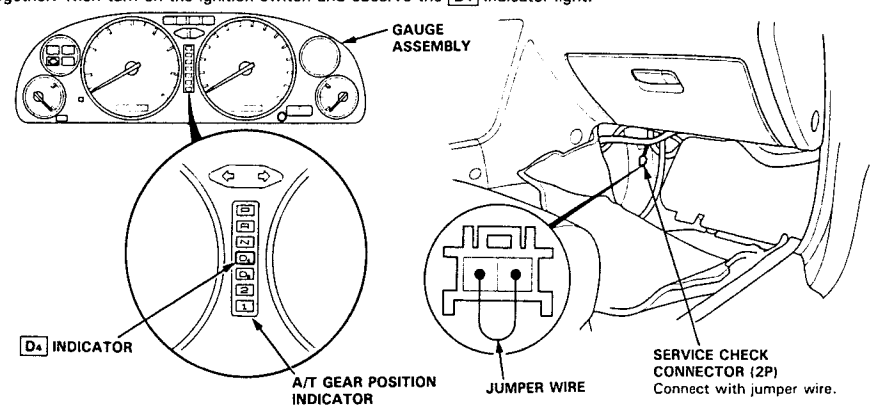

Codes 1 through 9 are indicated by individual short blinks, codes 10 through 16 are indicated by a series of long and short blinks. One long blink equals 10 short blinks. Add the long and short blinks together to determine the code. After determining the code, refer to the electrical system Symptom-to-Component Chart on pages 14-50 and 51.

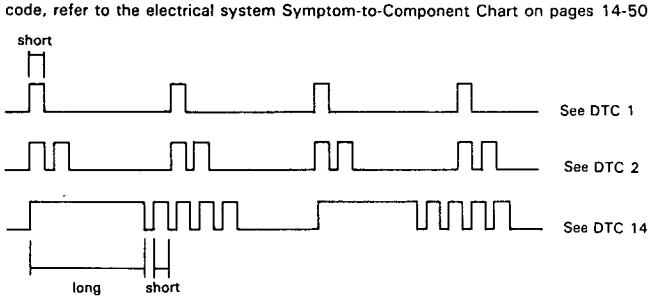

Some PGM-FI problems will also make the D4 indicator light come on. After repairing the PGM-FI system, disconnect the No. 39 BACK UP fuse (10 A) in the under-hood fuse/relay box for more than 10 seconds to reset the TCM memory.

NOTE:
- PGM-FI system
  The PGM-FI system on this model is a sequential multiport fuel injection system.
- The D4 indicator light may come on, indicating a system problem, when, in fact, there is a poor or intermittent electrical connection. First, check the electrical connections, clean or repair if necessary.
- If the electrical readings are not as specified when using the test harness, check the test harness connection before proceeding.
- Disconnecting the No. 39 BACK UP fuse in the under-hood fuse/relay box also cancels the radio anti-theft code, preset stations and the clock setting. Get the customer's code number and make note of the radio presets before removing the fuse so you can reset them.

(cont'd)

CAUTION:
- **All SRS electrical wiring harnesses are coverd with yellow outer insulation.**
- **Before disconnecting the SRS wire harness, install the short connector(s) on the airbag(s).**
- **Replace the entire affected SRS harness assembly if it has an open circuit or damaged wiring.**

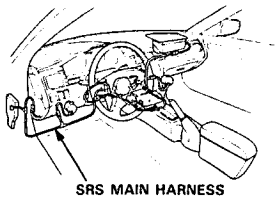

If the inspection for a particular failure code requires the use of Test Harness (07LAJ–PT3010A):

1. Remove the glove box from the dashboard.

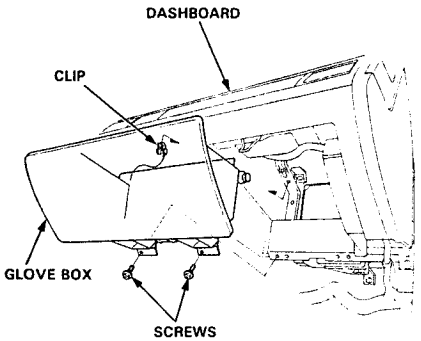

2. Remove the right door sill molding and the small cover on the right kick panel, then pull the carpet back to expose the ECM.

3. Remove the ECM cover mounting nuts and turn the ECM over.

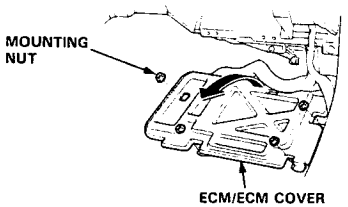

4. Remove the ABS control unit.

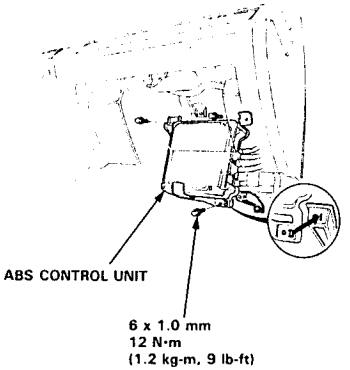

5. Remove the TCM and disconnect the wire harness connectors.

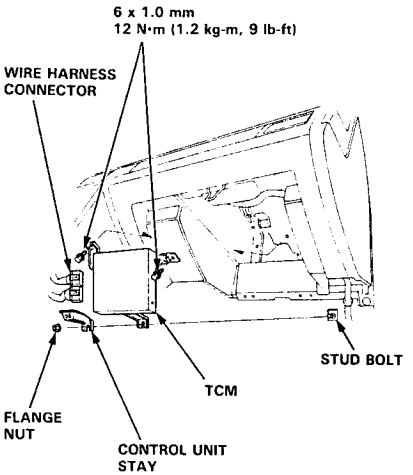

6. Connect the wire harness to the Test Harness, and/or connect the Test Harness to the TCM according to the troubleshooting flowchart.

NOTE:
- Only the A and D terminals of the Test Harness are used for A/T troubleshooting.
- Unless otherwise noted, use only the Digital Multimeter, KS–AHM–32–003, for testing.

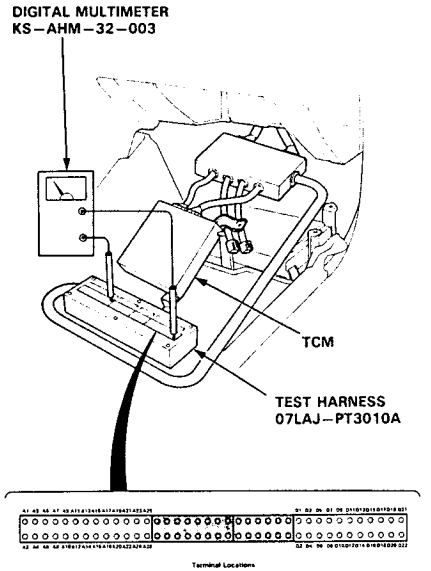

- **TCM Reset Procedure**

1. Turn the ignition switch off.
2. Remove the No. 39 BACK UP fuse (10 A) from the under-hood fuse/relay box for 10 seconds to reset the TCM.

NOTE: Disconnecting the No. 39 BACK UP fuse also cancels the radio anti-theft code, preset stations and the clock setting. Get the customer's code number and make note of the radio presets before removing the fuse so you reset them.

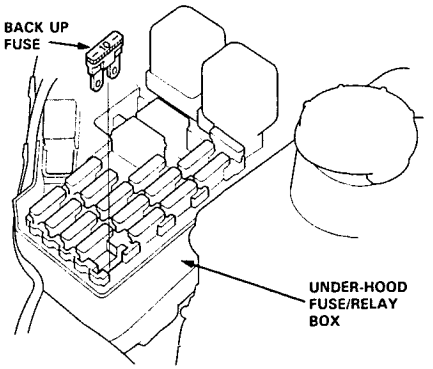

- **Final Procedure**

NOTE: This procedure must be done after any troubleshooting.

1. Remove the Jumper Wire from the Service Check Connector.
2. Reset the TCM.
3. Set the radio preset stations and clock setting.

Electrical Troubleshooting

Symptom-to-Component Chart

Number of D4 indicator light blinks while Service Check Connector is jumped.	D4 indicator light	Possible Cause	Symptom	Refer to page
1	Blinks	• Disconnected lock-up control solenoid valve A connector • Short or open in lock-up control solenoid valve A wire • Faulty lock-up control solenoid valve A	• Lock-up clutch does not engage. • Lock-up clutch does not disengage. • Unstable idle speed.	14-52
2	Blinks	• Disconnected lock-up control solenoid valve B connector • Short or open in lock-up control solenoid valve B wire • Faulty lock-up control solenoid valve B	• Lock-up clutch does not engage.	14-53
3	Blinks or OFF	• Disconnected throttle position (TP) sensor connector • Short or open in TP sensor wire • Faulty TP sensor	• Lock-up clutch does not engage.	14-54
4	Blinks	• Disconnected vehicle speed sensor (VSS) connector • Short or open in VSS wire • Faulty VSS	• Lock-up clutch does not engage.	14-55
5	Blinks	• Short in A/T gear position switch wire • Faulty A/T gear position switch	• Fails to shift other than 2nd ↔ 4th gears. • Lock-up clutch does not engage.	14-56
6	OFF	• Disconnected A/T gear position switch connector • Open in A/T gear position switch wire • Faulty A/T gear position switch	• Fails to shift other than 2nd ↔ 4th gears. • Lock-up clutch does not engage. • Lock-up clutch engages and disengages alternately.	14-58
7	Blinks	• Disconnected shift control solenoid valve A connector • Short or open in shift control solenoid valve A wire • Faulty shift control solenoid valve A	• Fails to shift (between 1st ↔ 4th, 2nd ↔ 4th or 2nd ↔ 3rd gears only). • Fails to shift (stuck in 4th gear).	14-60
8	Blinks	• Disconnected shift control solenoid valve B connector • Short or open in shift control solenoid valve B wire • Faulty shift control solenoid valve B	• Fails to shift (stuck in 1st or 4th gears).	14-61
9	Blinks	• Disconnected countershaft speed sensor connector • Short or open in the counter-shaft speed sensor wire • Faulty countershaft speed sensor	• Lock-up clutch does not engage.	14-62
10	Blinks	• Disconnected engine coolant temperature (ECT) sensor connector • Short or open in ECT sensor wire • Faulty ECT sensor	• Lock-up clutch does not engage.	14-63

Number of D4 indicator light blinks while Service Check Connector is jumped.	D4 indicator light	Possible Cause	Symptom	Refer to page
11	OFF	• Disconnected ignition coil connector • Short or open in ignition coil wire • Faulty ignition coil	• Lock-up clutch does not engage.	14-64
13	OFF	• Disconnected manifold absolute pressure (MAP) sensor connector • Short or open in MAP sensor wire • Faulty MAP sensor	• No specific symptom appears.	14-65
14	OFF	• Short or open in FAS (PNK) wire • Trouble in ECM	• Transmission jerks hard when shifting.	14-66
15	OFF	• Disconnected mainshaft speed sensor connector • Short or open in mainshaft speed sensor wire • Faulty mainshaft speed sensor	• Transmission jerks hard when shifting.	14-68
16	Blinks	• Disconnected linear solenoid connector • Short or open in linear solenoid wire • Faulty linear solenoid	• Transmission jerks hard when shifting. • Lock-up clutch does not engage.	14-70

If the self-diagnosis D4 indicator light does not blink, perform an inspection according to the table listed below.

Symptom	Probable cause	Ref. page
D4 indicator light is on steady, not blinking whenever the ignition is on.	——	14-71
D4 indicator light does not come on for 2 seconds after ignition is first turned on.	——	14-72
Lock-up clutch does not have duty operation (ON ↔ OFF).	Check A/C signal with A/C on	14-74
Lock-up clutch does not engage.		
Select lever cannot be moved from P position with the brake pedal depressed.	Check brake light signal.	14-75

- If a customer describes the symptoms for codes 3, 6, 11, 14 or 15, yet the D4 indicator light is not blinking, it will be necessary to recreate the symptom by test driving, and then checking the D4 indicator light with the ignition still ON.
- If the D4 indicator light displays codes 1, 2, 3, 7, 8, 11 or 16, check first the fuses in the under-dash fuse box and in the under-hood fuse/relay box before electrical troubleshooting. If any of the fuses have blown, repair them and then recheck.
- If the D4 indicator light displays codes other than those listed above or stays lit continuously, the TCM is faulty.
- Sometimes the D4 indicator light and the Malfunction Indicator Lamp (MIL)/Check Engine light may come on simultaneously. If so, check the PGM-FI system according to the number of blinks on the MIL, then reset the memory by removing the No. 39 BACK UP fuse in the under-hood fuse/relay box for more than 10 seconds. Drive the vehicle for several minutes at speeds over 30 mph (50 Km/h), then recheck the MIL.

NOTE:
- PGM-FI system
  The PGM-FI system on this model is a sequential multiport fuel injection system.
- The D4 indicator light may come on, indicating a system problem, when, in fact, there is a poor or intermittent electrical connection. First, check the electrical connections, clean or repair if necessry.
- If the electrical readings are not as specified when using the test harness, check the test harness connection before proceeding.
- Disconnecting the No. 39 BACK UP fuse in the under-hood fuse/relay box also cancels the radio anti-theft code, preset stations and the clock setting. Get the customer's code number and make note of the radio presets before removing the fuse so you can reset them.

Electrical Troubleshooting

Troubleshooting Flowchart

Possible Cause

- Disconnected lock-up control solenoid valve A connector
- Short or open in lock-up control solenoid valve A wire
- Faulty lock-up control solenoid valve A

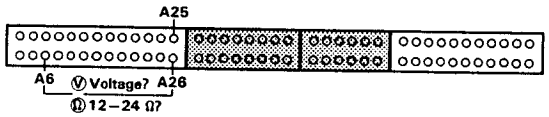

Sefl-diagnosis D4 indicator light blinks once.

Disconnect the 26P connector from the TCM.
Connect the Test Harness "A" connector to the wire harness only, not to the TCM (14-48 and 49).

Turn the ignition switch ON.

Measure the voltage between the A6 and A25/A26 terminals.

Is there voltage?
- YES → Repair short to power source in BRN wire between the A6 terminal and the lock-up control solenoid valve A.
- NO ↓

Turn the ignition switch OFF.

Measure the resistance between the A6 and A25/A26 terminals.

Is the resistance 12-24 Ω?
- YES → Check for loose TCM connectors. If necessary, substitute a known-good TCM and recheck.
- NO ↓

Disconnect the 2P connector from the lock-up control solenoid valve assembly.

Check for continuity between the A6 and A25/A26 terminals.

Is there continuity?
- YES → Repair short to ground in BRN wire between the A6 terminal and the lock-up control solenoid valve A.
- NO ↓

Measure the resistance of the solenoid at the 2P connector (14-78).

Is the resistance 12-24 Ω?
- YES → Check for open in BRN wire between the A6 terminal and the lock-up control solenoid valve A.
- NO ↓

Replace the lock-up control solenoid valve assembly.

Possible Cause

- Disconnected lock-up control solenoid valve B connector
- Short or open in lock-up control solenoid valve B wire
- Faulty lock-up control solenoid valve B

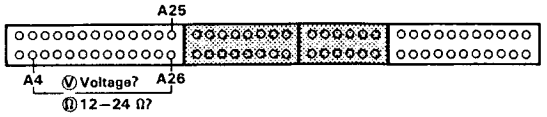

Self-diagnosis D4 indicator light blinks twice.

Disconnect the 26P connector from the TCM.
Connect the Test Harness "A" connector to the wire harness only, not to the TCM (14-48 and 49).

Turn the ignition switch ON.

Measure the voltage between the A4 and A25/A26 terminals.

Is there voltage?
- YES → Repair short to power source in GRY wire between the A4 terminal and the lock-up control solenoid valve B.
- NO ↓

Turn the ignition switch OFF.

Measure the resistance between the A4 and A25/A26 terminals.

Is the resistance 12–24 Ω?
- YES → Check for loose TCM connectors. If necessary, substitute a known-good TCM and recheck.
- NO ↓

Disconnect the 2P connector from the lock-up control solenoid valve assembly.

Check for continuity between the A4 and A25/A26 terminals.

Is there continuity?
- YES → Repair short to ground in GRY wire between the A4 terminal and the lock-up control solenoid valve B.
- NO ↓

Measure the resistance of the solenoid at the 2P connector (14-78).

Is the resistance 12–24 Ω?
- YES → Check for open in GRY wire between the A4 terminal and the lock-up control solenoid valve B.
- NO ↓

Replace the lock-up control solenoid valve assembly.

(cont'd)

Troubleshooting Flowchart (cont'd)

Self-diagnosis D4 indicator light blinks three times.

Turn the ignition switch ON.

Check whether the Malfunction Indicator Lamp (MIL) blinks (see section 11).

Is the MIL blinking?
- YES → **Repair the PGM-FI System (see section 11).**
- NO ↓

Turn the ignition switch OFF.

Disconnect the 26P and 22P connectors from the TCM.
Connect the Test Harness "A" and "D" connectors to the wire harness only, not to the TCM (14-48 and 49).

Turn the ignition switch ON.

Measure the voltage between the D18 and A25/A26 terminals.

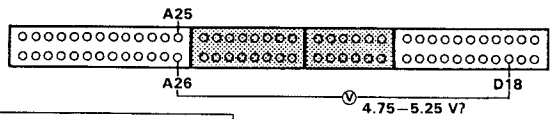

Is the voltage 4.75–5.25 V?
- NO → **Repair open or short in BLU/WHT wire between the D18 terminal and the ECM.**
- YES ↓

Turn the ignition switch OFF.

Connect the Test Harness "A" and "D" connectors to the TCM.

Turn the ignition switch ON.

Measure the voltage between the D7 and A25/A26 terminals.

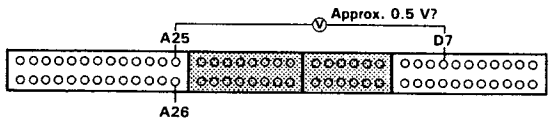

Is the voltage approx. 0.5 V?
- NO → **Repair open or short in RED/YEL wire between the D7 terminal and the TP sensor.**
- YES ↓

Check for loose TCM connectors. If necessary, substitute a known-good TCM and recheck.

Possible Cause
• Disconnected throttle position (TP) sensor connector • Short or open in TP sensor wire • Faulty TP sensor

Self-diagnosis D4 indicator light blinks four times.

Possible Cause
• Disconnected vehicle speed sensor (VSS) connector • Short or open in VSS wire • Faulty VSS

⚠ WARNING Make sure lifts, jacks and safety stands are placed properly (section 1).

Does the speedometer operate?
- NO → **Refer to Section 23 for speedometer/vehicle speed sensor test.**
- YES ↓

Raise the car.

Shift transmission to N position.

Disconnnect the 26P and 22P connectors from the TCM.
Connect the Test Harness "A" and "D" connectors to the wire harness only, not to the TCM (14-48 and 49).

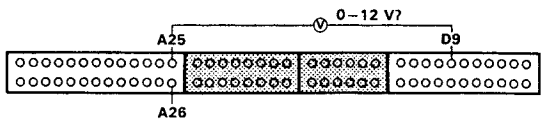

Turn the ignition switch ON.

Rotate the front wheel and check for voltage between the D9 and A25/A26 terminals. Block the other wheel so it does not turn.

Does the voltage 0–12 V appear alternately?
- NO → **Check for short or open in ORN wire between the D9 terminal and the VSS. If wire is OK, check the VSS (see section 23).**
- YES ↓

Check for loose TCM connectors. If necessary, substitute a known-good TCM and recheck.

(cont'd)

Troubleshooting Flowchart (cont'd)

Self-diagnosis D4 indicator light blinks five times.

Possible Cause
• Short in A/T gear position switch wire • Faulty A/T gear position switch

NOTE: Code 5 is caused when the TCM receives two gear position inputs at the same time.

Turn the ignition switch ON.

Observe the A/T gear position indicator and select each position separately.

Do any indicators fail to light when shifting through all positions?

- YES → See A/T gear position indicator inspection (see section 23).
- NO ↓

Turn the ignition switch OFF.

Connect the Test Harness between the TCM and connectors (14-48 and 49).

Turn the ignition switch ON.

Shift to other than R position.

Measure the voltage between the A21 and A25/A26 terminals.

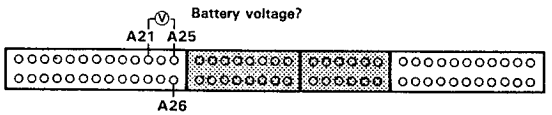

Is there battery voltage?

- NO → Check for short in GRN/RED wire between the A21 terminal and the A/T gear position switch or A/T gear position indicator. If wire is OK, check for loose TCM connectors. If necessary, substitute a known-good TCM and recheck.
- YES ↓

Shift to other than N and P positions.

Measure the voltage between the A19 and A25/A26 terminals.

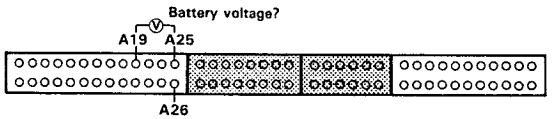

Is there battery voltage?

- NO → Check for short in YEL/GRN wire between the A19 terminal and the A/T gear position indicator or short in GRN/WHT or GRN wire between the A/T gear position indicator and the A/T gear position switch. If wire is OK, check for loose TCM connectors. If necessary, substitute a known-good TCM and recheck.
- YES ↓

To page 14-57

From page 14-56

Shift to other than D4 position.

Measure the voltage between the A17 and A25/A26 terminals.

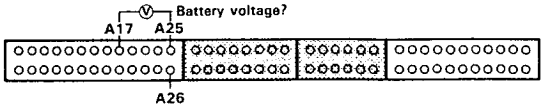

Is there battery voltage?

- NO → Check for short in GRN/BLK wire between the A17 terminal and the A/T gear position switch. If wire is OK, check for loose TCM connectors. If necessary, substitute a known-good TCM and recheck.
- YES ↓

Shift to other than D3 position.

Measure the voltage between the A15 and A25/A26 terminals.

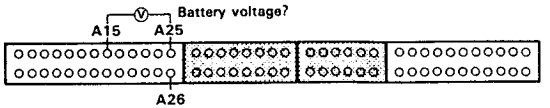

Is there battery voltage?

- NO → Check for short in GRN/BLU wire between the A15 terminal and the A/T gear position switch or A/T gear position indicator. If wire is OK, check for loose TCM connectors. If necessary, substitute a known-good TCM and recheck.
- YES ↓

Shift to other than 2 position.

Measure the voltage between the A13 and A25/A26 terminals.

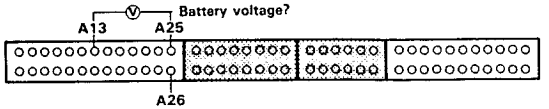

Is there battery voltage?

- NO → Check for short in GRN/YEL wire between the A13 terminal and the A/T gear position switch or A/T gear position indicator. If wire is OK, check for loose TCM connectors. If necessary, substitute a known-good TCM and recheck.
- YES ↓

Shift to other than 1 position.

Measure the voltage between the A11 and A25/A26 terminals.

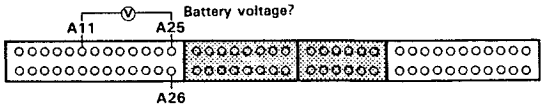

Is there battery voltage?

- NO → Check for short in ORN wire between the A11 terminal and the A/T gear position switch or A/T gear position indicator. If wire is OK, check for loose TCM connectors. If necessary, substitute a known-good TCM and recheck.
- YES ↓

Check for loose TCM connectors. If necessary, substitute a known-good TCM and recheck.

(cont'd)

Troubleshooting Flowchart (cont'd)

Self-diagnosis D4 indicator light blinks six times.

Connect the Test Harness between the TCM and connectors (14-48 and 49).

Turn the ignition switch ON.

Shift to R position.

Measure the voltage between the A21 and A25/A26 terminals.

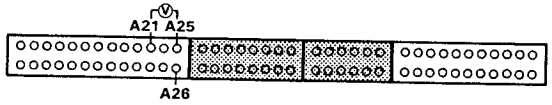

Is there voltage?

YES → **Repair open in GRN/RED wire between the A21 terminal and the A/T gear position switch.**

NO

Shift to N or P position.

Measure the voltage between the A19 and A25/A26 terminals.

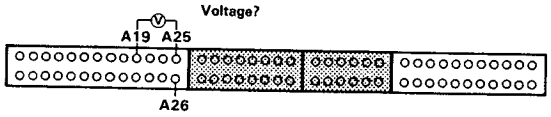

Is there voltage?

YES → **Repair open in YEL/GRN wire between the A19 terminal and the A/T gear position indicator.**

NO

To page 14-59

Possible Cause
• Disconnected A/T gear position switch connector • Open in A/T gear position wire • Faulty A/T gear position switch

NOTE: Code 6 is caused when the TCM receives an input for any gear.

From page 14-58

Shift to D4 position.

Measure the voltage between the A17 and A25/A26 terminals.

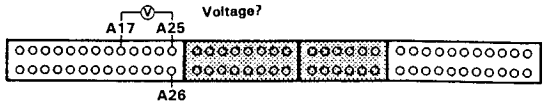

Is there voltage?

YES → **Repair open in GRN/BLK wire between the A17 terminal and the A/T gear position switch.**

NO

Shift to D3 position.

Measure the voltage between the A15 and A25/A26 terminals.

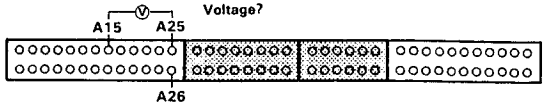

Is there voltage?

YES → **Repair open in GRN/BLU wire between the A15 terminal and the A/T gear position switch.**

NO

Shift to 2 position.

Measure the voltage between the A13 and A25/A26 terminals.

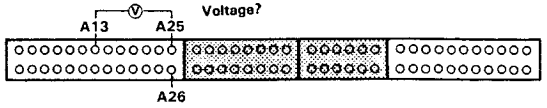

Is there voltage?

YES → **Repair open in GRN/YEL wire between the A13 terminal and the A/T gear position switch.**

NO

Shift to 1 position.

Measure the voltage between the A11 and A25/A26 terminals.

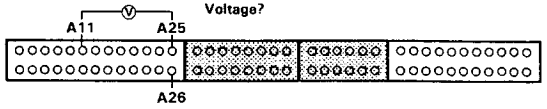

Is there voltage?

YES → **Repaiar open in ORN wire between the A11 terminal and the A/T gear position switch.**

NO

Check for loose TCM connectors. If necessary, substitute a known-good TCM and recheck.

(cont'd)

Troubleshooting Flowchart (cont'd)

Self-diagnosis D4 indicator light blinks seven times.

Disconnect the 26P connector from the TCM.
Connect the Test Harness "A" connector to the wire harness only, not to the TCM (14-48 and 49).

Turn the ignition switch ON.

Measure the voltage between the A5 and A25/A26 terminals.

Is there voltage?
- YES → **Repair short to power source in PNK wire between the A5 terminal and the shift control solenoid valve A.**
- NO ↓

Turn the ignition switch OFF.

Measure the resistance between the A5 and A25/A26 terminals.

Is the resistance 12–24 Ω?
- YES → **Check for loose TCM connectors. If necessary, substitute a known-good TCM and recheck.**
- NO ↓

Disconnect the 2P connector from the shift control solenoid valve assembly.

Check for continuity between the A5 and A25/A26 terminals.

Is there continuity?
- YES → **Repair short to ground in PNK wire between the A5 terminal and the shift control solenoid valve A.**
- NO ↓

Measure the resistance of the solenoid at the 2P connector (14-80).

Is the resistance 12-24 Ω?
- YES → **Check for open in PNK wire between the A5 terminal and the shift control sodenoid valve A.**
- NO ↓

Replace the shift control solenoid valve assembly.

Possible Cause
- **Disconnected shift control solenoid valve A connector**
- **Short or open in shift control solenoid valve A wire**
- **Faulty shift control solenoid valve A**

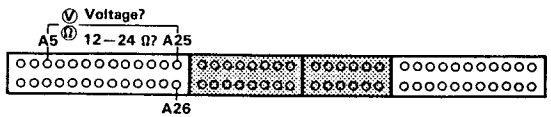

Self-diagnosis D4 indicator light blinks eight times.

Disconnect the 26P connector from the TCM.
Connect the Test Harness "A" connector to the wire harness only, not to the TCM (14-48 and 49).

Turn the ignition switch ON.

Measure the voltage between the A3 and A25/A26 terminals.

Is there voltage?
- YES → **Repair short to power source in YEL wire between the A3 terminal and shift control solenoid valve B.**
- NO ↓

Turn the ignition switch OFF.

Measure the resistance between the A3 and A25/A26 terminals.

Is the resistance 12–24 Ω?
- YES → **Check for loose TCM connectors. If necessary, substitute a known-good TCM and recheck.**
- NO ↓

Disconnect the 2P connector from the shift control solenoid valve assembly.

Check for continuity between the A3 and A25/A26 terminals.

Is there continuity?
- YES → **Repair short to ground in YEL wire between the A3 terminal and the shift control solenoid valve B.**
- NO ↓

Measure the resistance of the solenoid at the 2P connector (14-80).

Is the resistance 12–24 Ω?
- YES → **Check for open in YEL wire between the A3 terminal and the shift control solenoid valve B.**
- NO ↓

Replace the shift control solenoid valve assembly.

Possible Cause
- **Disconnected shift control solenoid valve B connector**
- **Short or open in shift control solenoid valve B wire**
- **Faulty shift control solenoid valve B**

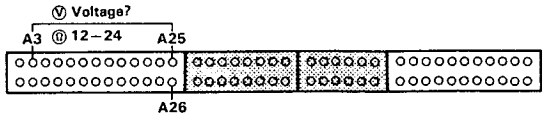

(cont'd)

Troubleshooting Flowchart (cont'd)

Self-diagnosis D4 indicator light blinks nine times.

Possible Cause
- Loose or faulty connection between the TCM and car harness
- Disconnected countershaft speed sensor connector
- Short or open in countershaft speed sensor wire
- Faulty countershaft speed sensor

Is the countershaft speed sensor installed properly?
- NO → **Reinstall and recheck.**
- YES ↓

Disconnect the 2P connector from the countershaft speed sensor connector.

Measure the resistance of the countershaft speed sensor.

Is the resistance 400–600 Ω? (at 70°F, 20°C)
- NO → **Replace the countershaft speed sensor.**
- YES ↓

Disconnect the 22P connector from the TCM.
Connect the Test Harness "D" connector to the wire harness only, not to the TCM (14-48 and 49).

Check for continuity between the D15 terminal and body ground.
Check for continuity between the D17 terminal and body ground.

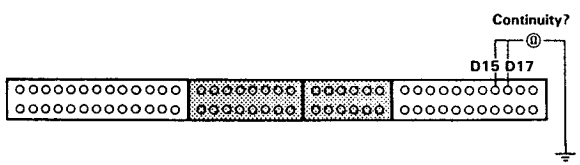

Is there continuity?
- YES → **Repair short in WHT/BLU or ORN/BLU wire between the countershaft speed sensor and body ground.**
- NO ↓

Reconnect the countershaft speed sensor connentor.

Measure the resistance between D15 and D17 terminals.

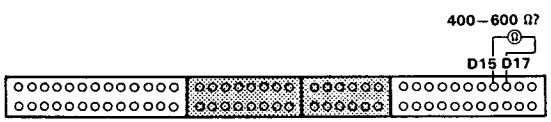

Is the resistance 400–600 Ω? (at 70°F, 20°C)
- NO → **Repair open in WHT/BLU or ORN/BLU wire between 22P connector and the countershaft speed sensor.**
- YES ↓

Check for loose TCM connectors. If necessary, substitute a known-good TCM and recheck.

Self-diagnosis D4 indicator light blinks ten times.

Possible Cause
- Disconnected engine coolant temperature (ECT) sensor connector
- Short or open in ECT sensor wire
- Faulty ECT sensor

Turn the ignition switch ON.

Check whether the Malfunction Indicator Lamp (MIL) blinks (see section 11).

Is the MIL blinking?
- YES → **Repair the PGM-FI System (see section 11).**
- NO ↓

Turn the ignition switch OFF.

Disconnect the 26P and 22P connectors from the TCM.
Connect the Test Harness "A" and "D" connectors to the wire harness only, not to the TCM (14-48 and 49).

Turn the ignition switch ON.

Measure the voltage between the D18 and A25/A26 terminals.

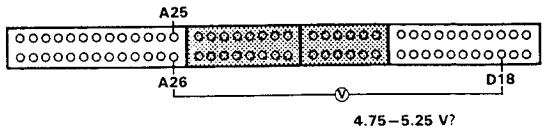

Is the voltage 4.75–5.25 V?
- NO → **Repair open or short in BLU/WHT wire between the D18 terminal and the ECM.**
- YES ↓

Turn the ignition switch OFF.

Connect the Test Harness "A" and "D" connectors to the TCM.

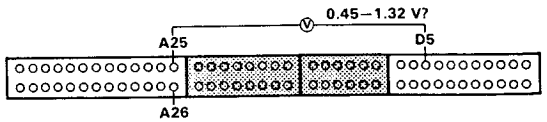

Start the engine and warm it up to normal operating temperature. (the radiator fan coms on).

Measure the voltage between the D5 and A25/A26 terminals.

Is the voltage 0.45–1.32 V?
- NO → **Repair open or short in YEL/GRN wire between the D5 terminal and the ECT sensor.**
- YES ↓

Check for loose TCM connectors. If necessary, substitute a known-good TCM and recheck.

(cont'd)

Electrical Troubleshooting

Troubleshooting Flowchart (cont'd)

Self-diagnosis D4 indicator light blinks eleven times.

Disconnect the 26P connector from the TCM.
Connect the Test Harness "A" connector to the wire harness only, not to the TCM (14-48 and 49).

Turn the ignition switch ON.

Measure the voltage between the A9 and A25/A26 terminals.

Is there battery voltage?

NO → **Repair open or short in BLU wire between the A9 terminal and the ignition coil.**

YES → **Check for loose TCM connectors. If necessary, substitute a known-good TCM and recheck.**

Possible Cause
• Disconnected ignition coil connector • Short or open in ignition coil wire • Faulty ignition coil

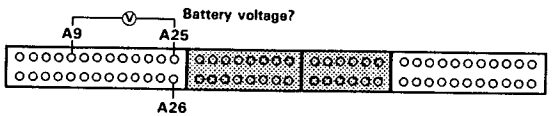

Self-diagnosis D4 indicator light blinks thirteen times.

Turn the ignition switch ON.

Check whether the Malfunction Indicator Lamp (MIL) blinks (see section 11).

Is the MIL blinking?

YES → **Repair the PGM-FI System (see section 11).**

NO

Turn the ignition switch OFF.

Disconnect the 26P and 22P connectors from the TCM.
Connect the Test Harness "A" and "D" connectors to the wire harness only, not to the TCM (14-48 and 49).

Turn the ignition switch ON.

Measure the voltage between the D18 and A25/A26 terminals.

Is the voltage 4.75–5.25 V?

NO → **Repair open or short in BLU/WHT wire between the D18 terminal and the ECM.**

YES

Turn the ignition switch OFF.

Connect the Test Harness "A" and "D" connectors to the TCM.

Turn the ignition switch ON.

Measure the voltage between the D3 and A25/A26 terminals.

Is the voltage approx. 5 V?

NO → **Repair open or short in WHT/BLU wire between the D3 terminal and the MAP sensor.**

YES

Check for loose TCM connectors. If necessary, substitute a known-good TCM and recheck.

Possible Cause
• Disconnected manifold absolute pressure (MAP) sensor connector • Short or open in MAP sensor wire • Faulty MAP sensor

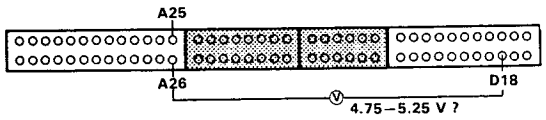

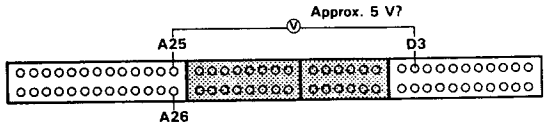

(cont'd)

Troubleshooting Flowchart (cont'd)

Self-diagnosis D4 indicator light blinks fourteen times.

Possible Cause
• Short or open in FAS (PNK) wire • Trouble in ECM

Is the Malfunction Indicator Lamp (MIL) on?

YES → Repair the PGM-FI System (see section 11).

NO

Start the engine and warm it up to normal operating temperature (the radiator fan comes on).

Shift to P position.

Turn the ignition switch OFF.

Connect the Test Harness between the TCM and connectors (14-48 and 49).

Turn the ignition switch ON and wait for at least two seconds.

Measure the voltage between the D16 (+) and A25/A26 (−) terminals.

Is there approx. 5 V?

YES → Check foe loose TCM connectors. If necessary, substitute a known-good TCM and recheck.

NO

Turn the ignition switch OFF.

Disconnect the Test Harness from the TCM.
Leave connected to car harness.

Turn the ignition switch ON.

To page 14-67

⚠ WARNING

- Make sure lifts, jacks and safety stands are placed properly (see section 1).
- While testing, be careful of the rotating front wheels.

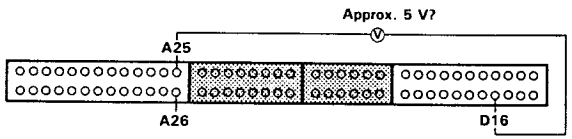

From page 14-66

Measure the voltage between the D16 (+) and A25/A26 (−) terminals

Is there approx. 5 V?

YES → Check for loose TCM connectors. If necessary, substitute a known-good TCM and recheck.

NO

Disconnect the 26P connector from the ECM.

Check for continuity between the D16 and A25/A26 terminals of the Test Harness.

Is there continuity?

NO → Repair short in PNK (FAS) wire between TCM and ECM.

YES

Check for continuity on the PNK wire between the D16 terminal on the TCM and the A18 terminal on the ECM.

Is there continuity?

YES → Check for loose TCM connectors. If necessary, substitute a known-good TCM and recheck.

NO

Repair short in PNK (FAS) wire between TCM and ECM.

(cont'd)

Troubleshooting Flowchart (cont'd)

Self-diagnosis D4 indicator light blinks fifteen times.

Possible Cause
• Disconnected mainshaft speed sensor connector • Short or open in mainshaft speed sensor wire • Faulty mainshaft speed sensor

Are the mainshaft and countershaft speed sensors installed properly?
- NO → **Reinstall and recheck.**
- YES ↓

Disconnect the 2P connector from the mainshaft speed sensor.

Measure the resistance of the mainshaft speed sensor.

Is the resistance 400–600 Ω? (at 70°F, 20°C)
- NO → **Replace the mainshaft speed sensor.**
- YES ↓

Disconnect the 22P connector from the TCM.
Connect the Test Harness "D" connector to the wire harness only, not to the TCM (14-48 and 49).

Check the continuity between D19 and D12 terminals and body ground.

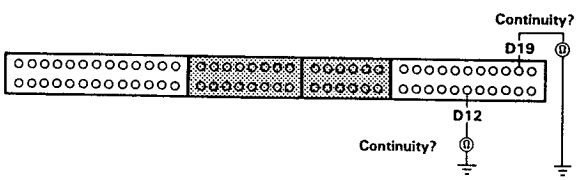

Is there continuity?
- YES → **Repair short in ORN or WHT wire between D19 and D12 terminals and the mainshaft speed sensor.**
- NO ↓

Reconnect the 2P connector to the mainshaft speed sensor.

To page 14-69

NOTE: A code 15 on the TCM doesn't always mean there's an electrical problem in the mainshaft or countershaft speed sensor circuit; code 15 may also indicate a mechanical problem in the transmission

From page 14-68

Measure the resistance between D19 and D12 terminals.

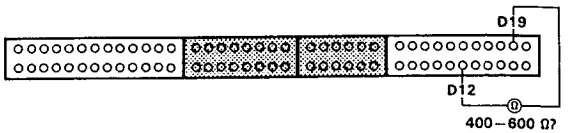

Is the resistance 400–600 Ω? (at 70°F, 20°C)
- NO → Check for continuity between D19 terminal and the mainshaft speed sensor.
  - Is there continuity?
    - NO → **Repair open in ORN wire between D19 terminal and the mainshaft speed sensor.**
    - YES ↓
  - Check for continuity between D12 terminal and the mainshaft speed sensor.
  - Is the continuity?
    - NO → **Repair open in WHT wire between D12 terminal and the mainshaft speed sensor.**
    - YES ↓
  - **Check for loose TCM connectors. If necessary, substitute a known-good TCM and recheck.**
- YES ↓

Run Electrical Troubleshooting for code 9. Check for loose TCM connector. If necessary, substitute a known-good TCM and recheck.

(cont'd)

Electrical Troubleshooting

Troubleshooting Flowchart (cont'd)

Self-diagnosis D4 indicator light blinks sixteen times.

Possible Cause
- **Disconnected linear solenoid connector**
- **Short or open in linear solenoid wire**
- **Faulty linear solenoid**

Disconnect the 26P and 22P connectors from the TCM.
Connect the Test Harness "A" and "D" connectors to the wire harness only, not to the TCM (14-48 and 49).

Check for continuity to body ground on the A1 and D1 terminals individually.

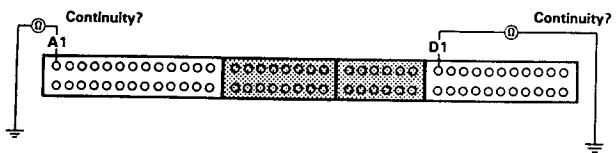

Is there continuity?
- YES → **Repair short in RED or WHT wire between A1 and D1 terminals and the linear solenoid connector.**
- NO ↓

Measure the resistance between the A1 and the D1 terminals.

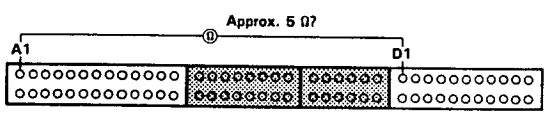

Is the resistance approximately 5 Ω?
- YES → **Check for loose TCM connectors. If necessary, substitute a known-good TCM and recheck.**
- NO ↓

Disconnect the connector from the linear solenoid.

Measure the resistance between two terminals of the linear solenoid connector (14-81).

Is the resistance approximately 5 Ω?
- NO → **Check the Linear Solenoid. (see pages 14-81 and 133).**
- YES ↓

Repair open in RED or WHT wire between A1 and D1 terminals and the linear solenoid connector.

D4 indicator light is on steady, not blinking whenever the ignition switch is turned ON.

Check the A/T gear position switch.

Is the A/T gear position switch OK?
- NO → **Replace the A/T gear position switch (see page 14-82).**
- YES ↓

Shift to P position.

Disconnect the 26P connector from the TCM.
Connect the Test Harness "A" connector to the wire harness only, not to the TCM (14-48 and 49).

Turn the ignition switch ON.

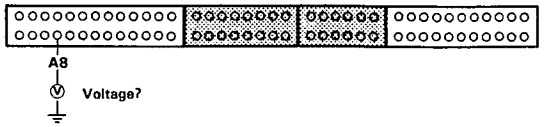

Measure the voltage between the A8 terminal and body ground.

Is there voltage?
- YES → **Replace the TCM.**
- NO ↓

Connect the Test Harness "A" connector to the TCM.

Measure the voltage between the GRN/BLK wire at the gauge assembly and body ground.

Is there voltage?
- NO → **Replace faulty A/T gear position indicator.**
- YES ↓

Repair short to power source on GRN/BLK wire between the A8 terminal and gauge assembly.

(cont'd)

Troubleshooting Flowchart (cont'd)

D4 indicator light does not come on with the ignition switch ON. (It should come on for about 2 seconds.)

Is the service check connector jumped? — YES → Disconnect the jumper wire and recheck.

NO

Shift to D4 position.

Does the D4 indicator light come on? — YES → Check for loose TCM connectors. If necessary, substitute a known-good TCM and recheck.

NO

Turn the ignition switch OFF.

Disconnect the 26P connector from the TCM.
Connect the Test Harness "A" connector to the wire harness only, not to the TCM (14-48 and 49).

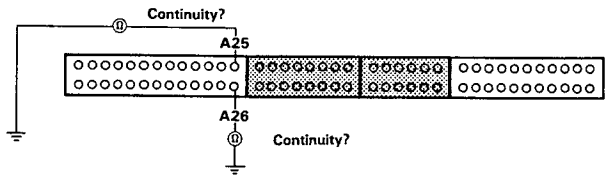

Check for continuity between the A25 terminal and body ground and A26 and body ground.

Is there continuity? — NO → Repair open BLK/RED or BRN/BLK wire(s) between A25 or A26 terminal(s) and G101.

YES

Turn the ignition switch ON.

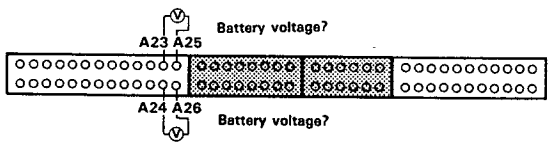

Measure the voltage between the A23 or A24 and A25 or A26 terminals.

Is there battery voltage? — NO → Repair open or short BLK/RED wire between the A23 and/or A24 terminals and under-dash fuse box.

YES

Turn the ignition switch OFF.

To page 14-73

From page 14-72

Connect the Test Harness "A" connector to the TCM.

Turn the ignition switch ON. Be sure that voltage is available for 2 seconds between the A8 terminal and A25/A26 terminal.

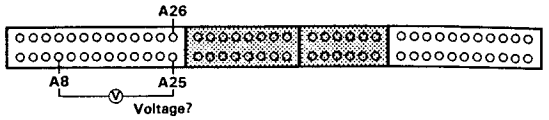

Is there voltage? — YES → Check for open or short in GRN/BLK wire between the A8 terminal and the gauge assembly.

NO

Turn the ignition switch OFF.

Disconnect the Test Harness "A" connector from the TCM.

Check for continuity between the A8 terminal and the GRN/BLK wire at the gauge assembly.

Is there continuity? — NO → Repair open in GRN/BLK wire between the A8 terminal and the gauge assembly.

YES

Check for loose TCM connectors. Check the A/T gear position switch. If necessary, substitute a known-good TCM and recheck.

(cont'd)

Troubleshooting Flowchart (cont'd)

Symptom
- Lock-up clutch does not have duty operation (ON↔OFF).
- Lock-up clutch does not engage.

Inspection of the A/C signal.

Start the engine.

Turn the blower switch ON.

Push the A/C switch ON.

Does A/C compressor clutch engage?

NO → See Air Conditioning Inspection (see section 22).

YES

Stop the engine.

Disconnect the 26P connector from the TCM.
Connect the Test Harness "A" connector to the wire harness only, not to the TCM (14-48 and 49).

Start the engine.

Measure the voltage between the A22 and A25/A26 terminals. (A/C compressor OFF)

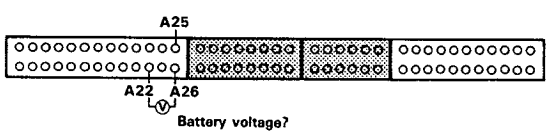

Is there battery voltage?

NO → Repair open in RED/BLU wire between the A22 terminal and A/C compressor clutch relay.

YES

- A/C signal is OK.
- Check for loose TCM connectors. If necessary, substitute a known-good TCM and recheck.
- Inspect the Air conditioning (see section 22).

Symptom
Shift lever cannot be moved from P position with the brake pedal depressed.

Inspection of the brake switch signal.

Check that the brake lights come on with the brake pedal depressed.

Are brake lights ON?

NO → Repair faulty brake switch circuit.

YES

Disconnect the 26P and 22P connectors from the TCM.
Connect the Test Harness "A" and "D" connectors to the wire harness only, not to the TCM (14-48 and 49).

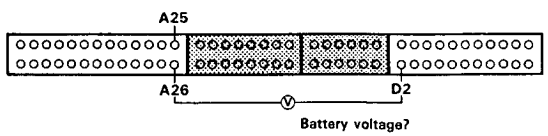

Measure the voltage between the D2 and A25/A26 terminals with the brake pedal depressed.

Is there battery voltage?

NO → Repair open in GRN/WHT wire between the D2 terminal and brake switch.

YES

- Brake switch signal is OK.
- Check for loose TCM connectors. If necessary, substitute a known-good TCM and recheck.
- Inspect the brake switch circuit (see section 23).

Transmission Control Module (TCM)

Replacement

CAUTION:
- **All SRS electrical wiring harnesses are covered with yellow outer insulation.**
- **Before disconnecting the SRS wire harness, install the short connector(s) on the airbag(s).**
- **Replace the entire affected SRS harness assembly if it has an open circuit or damaged wiring.**

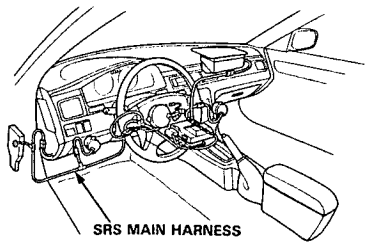

1. Remove the glove box from the dashboard.

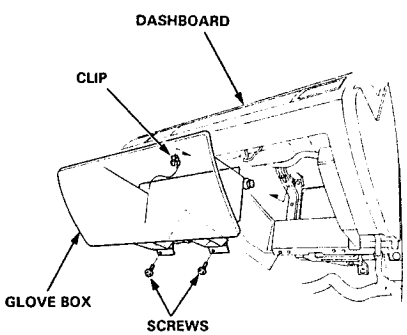

2. Remove the right door sill molding and the small cover on the right kick panel, then pull the carpet back to expose the ECM.

3. Remove the ECM cover mounting nuts and turn the ECM over.

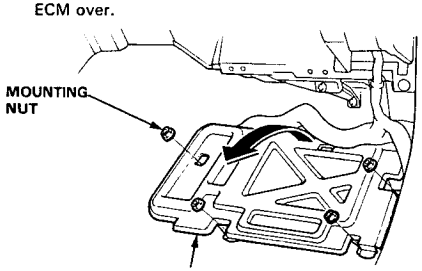

4. Remove the ABS control unit.

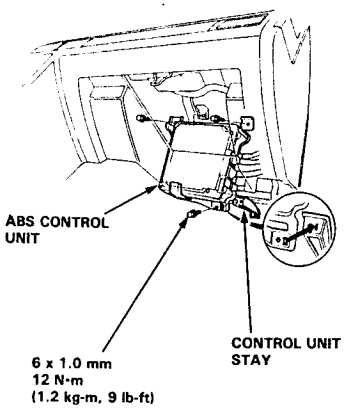

5. Remove the TCM and disconnect the wire harness connectors.

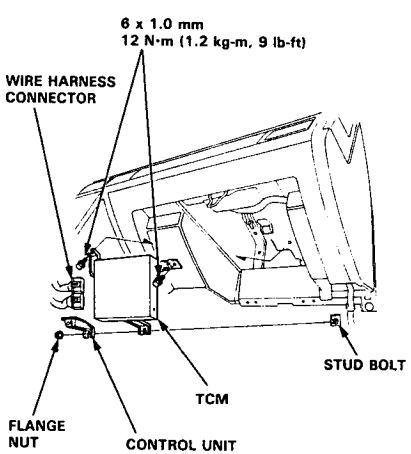

Mainshaft/Countershaft Speed Sensors

Replacement

⚠WARNING Make sure lifts, jacks and safety stands are placed properly (see section 1).

1. Raise the car.

2. Remove the transmission mount and mount bracket.

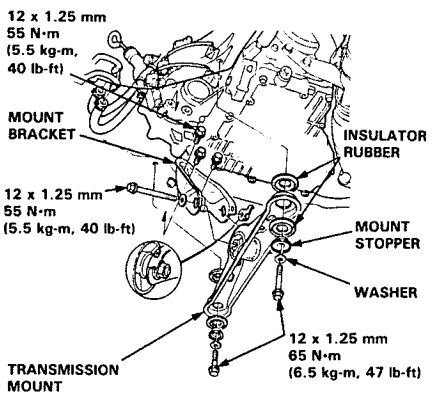

3. Disconnect the mainshaft and countershaft speed sensor connectors.

4. Remove the 6 mm bolt(s) from the transmission housing and remove the mainshaft and/or countershaft speed sensor(s).

5. Replace the O-rings with new ones before reassembling the mainshaft and countershaft speed sensors.

   NOTE: Install the mainshaft speed sensor with the mainshaft speed sensor washer. The countershaft speed sensor has no washer.

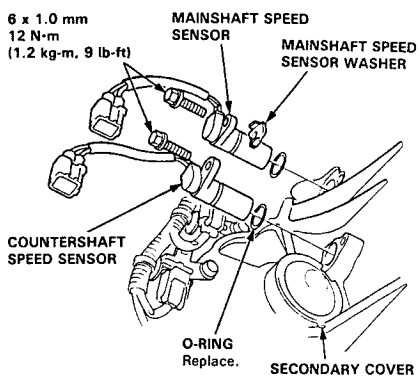

Lock-up Control Solenoid Valve A/B

Test

NOTE: Lock-up control solenoid valves A and B must be removed/replaced as an assembly.

1. Disconnect the transmission sub-harness connector.

2. Measure the resistance between the No. 1 terminal (solenoid valve A) of the transmission sub-harness connector and body ground and between the No. 2 terminal (solenoid valve B) and body ground.

   STANDARD: 12–24 Ω

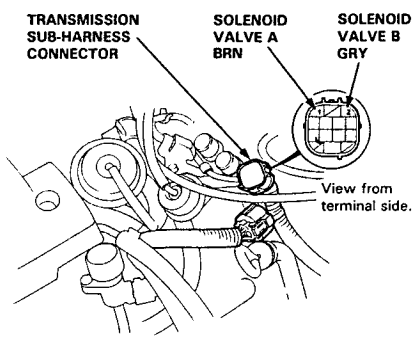

3. If the resistance is out of specification, disconnect the connector from the lock-up control solenoid valve A/B.

4. Measure the resistance between the No. 1 terminal (solenoid valve A) of the lock-up control solenoid valve connector and body ground and between the No. 2 terminal (solenoid valve B) and body ground.

   STANDARD: 12–24 Ω

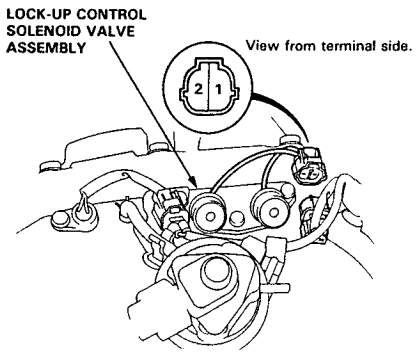

5. If the resistance is OK, replace the transmission sub-harness.

6. Replace the lock-up control solenoid valve assembly if the resistance is out of specification.

7. If the resistance is within the standard, connect the No. 1 terminal of the lock-up control solenoid valve connector to the battery positive terminal. A clicking sound should be heard. Connect the No. 2 terminal to the battery positive terminal. A clicking sound should be heard. Replace the lock-up control solenoid valve assembly if no clicking sound is heard.

Replacement

1. Remove the mounting bolts and lock-up control solenoid valve assembly.

   NOTE: Be sure to remove or replace the lock-up control solenoid valve A and B as an assembly.

2. Check the lock-up control solenoid valve oil passages for dust or dirt, and replace as an assembly, if necessary.

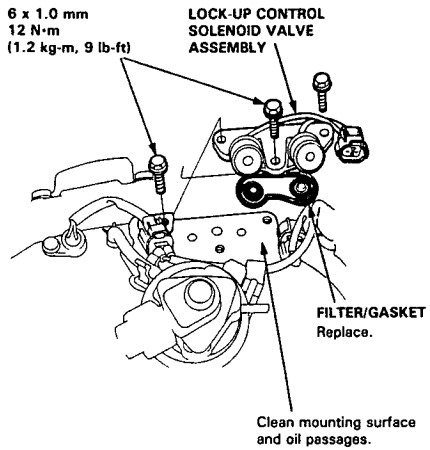

3. Clean the mounting surface and oil passages of the lock-up control solenoid valve assembly and install a new filter/gasket.

4. Check connector for rust, dirt or oil and reconnect it securely.

Shift Control Solenoid Valve

Test

NOTE: Shift control solenoid valves A and B must be removed/replaced as an assembly.

1. Disconnect the transmission sub-harness connector.

2. Measure the resistance between the No. 3 terminal of the transmission sub-harness and body ground and between the No. 4 terminal and body ground.

   STANDARD: 12–24 Ω

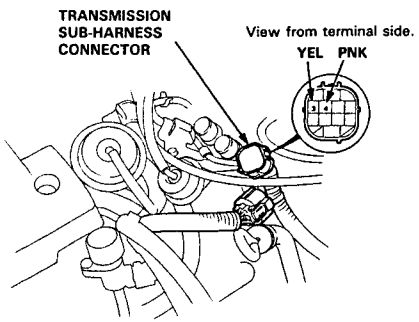

3. If the resistance is out of specification, disconnect the transmission sub-harness from the shift control solenoid valve harness.

4. Measure the resistance between the A terminal of the shift control solenoid valve harness and body ground and between the B terminal and body ground.

   STANDARD: 12–24 Ω

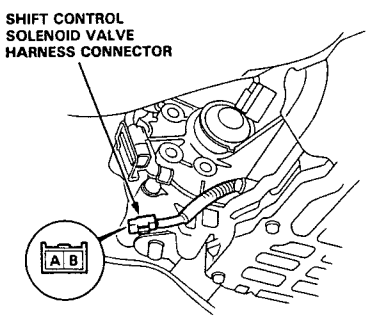

View from terminal side.

5. Replace the transmission sub-harness if the resistance is within specification.

6. Replace the shift control solenoid valve assembly if the resistance is out of specification.

7. If the resistance is within the standard, connect the A terminal of the shift control solenoid valve connector to the battery positive terminal. A clicking sound should be heard. Connect the B terminal to the battery positive terminal. A clicking sound should be heard. Replace the shift control solenoid valve assembly if no clicking sound is heard.

   NOTE: If the solenoid valve replacement is required, see Shift Control Solenoid Valve Replacement on page 14-100.

Linear Solenoid

Test

1. Disconnect the transmission sub-harness connector.

2. Measure the resistance between the No. 7 and No. 8 terminals of the transmission sub-harness.

   STANDARD: 5.0–5.6 Ω (at 70°F, 20°C)

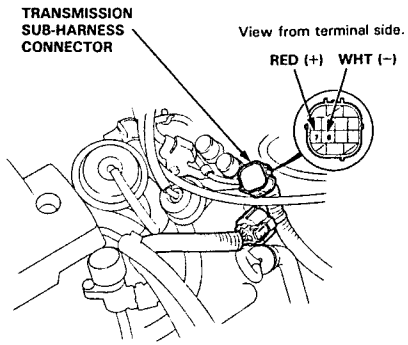

3. If the resistance is out of specification, disconnect the transmission sub-harness from the linear solenoid harness.

4. Measure the resistance between the A and B terminals of the linear solenoid harness.

   STANDARD: 5.0–5.6 Ω (at 70°F, 20°C)

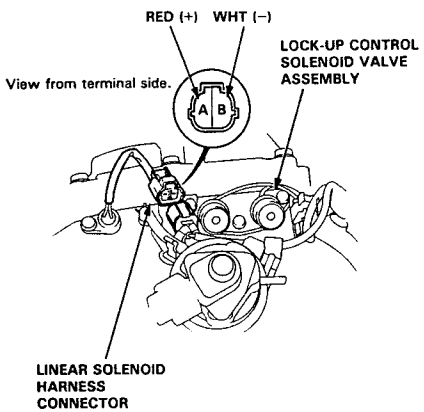

5. Replace the transmission sub-harness if the resistance is within specification.

6. Replace the linear solenoid if the resistance is out of specification.

7. If the resistance is within the standard, connect the A terminal of the linear solenoid connector to the battery positive terminal and connect the B terminal to the battery negative terminal. A clicking sound should be heard. If no clicking sound is heard, replace the linear solenoid and throttle valve body as an assembly.

   NOTE: If the linear solenoid replacement is required, see Throttle Valve Body/Linear Solenoid Replacement on page 14-133.

A/T Gear Position Switch

Replacement

⚠WARNING Make sure lifts, jacks and safety stands are placed properly (see section 1).

1. Raise the car.
2. Shift the select lever to [N] position.
3. Remove the transmission under-guard.

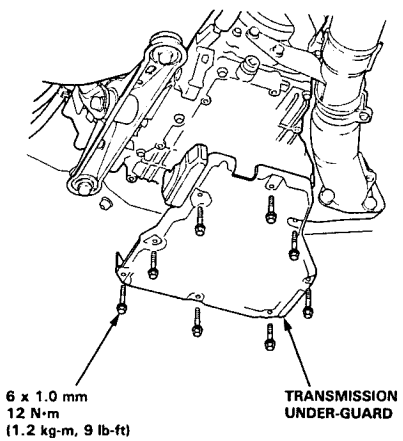

4. Disconnect the A/T gear position switch connector then remove the harness stay.

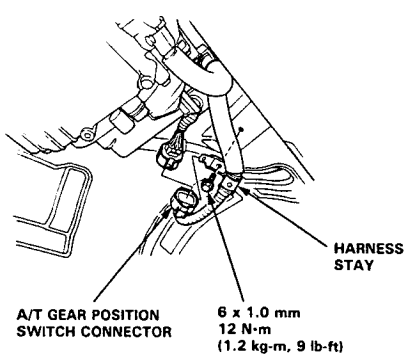

5. Remove the 6 mm bolt from the rear cover. Remove the 2 bolts then remove the A/T gear position switch from the control shaft.

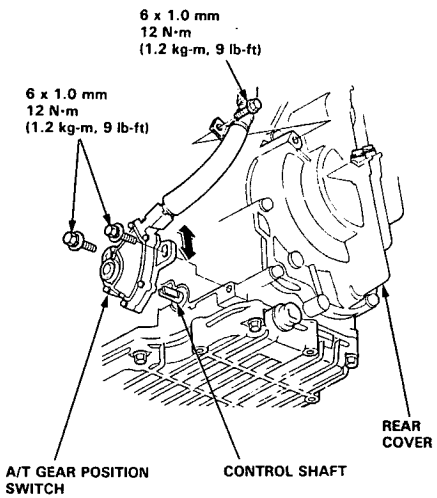

6. Set the A/T gear position switch to [N] position as shown.

   NOTE: The A/T gear position switch clicks in [N] position.

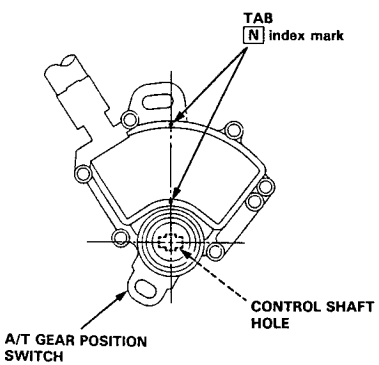

7. Install the A/T gear position switch in the reverse order of removal.

   NOTE:
   - Verify the control shaft is in the [N] position.
   - Put the A/T gear position switch in the control shaft.

8. Check the A/T gear position switch and the A/T gear position indicator (see section 23).
9. Move the select lever through all gears, and verify that the A/T gear position indicator follows the A/T gear position switch.

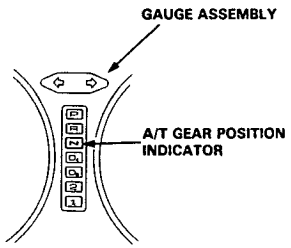

10. Start the engine and check the shift lever through all gears.

Hydraulic System

Symptom-to-Component Chart

SYMPTOM	Check these items on the PROBABLE CAUSE LIST	Check these items on the NOTES CHART
Engine runs, but car does not move in any gear.	1, 6, 7, 16, 42, 43	K, L, R, S
Car moves in [2] position but not in [D4] or [D3] position.	1, 8, 29, 44, 48	C, M, O
Car moves in [D4], [D3], [1] and [R] positions but not in [2] position.	1, 9, 30, 48, 49	C, L
Car moves in [D4], [D3], [2] and [1] positions but not in [R] position.	1, 22, 39, 40	C, L, Q
Car moves in [N] position.	1, 8, 9, 10, 11, 46, 47	C, D
Excessive idle vibration.	5, 6, 17, 36	B, K, L
Slips in all gears.	6, 7, 16	C, L, U
No engine braking in [1] position.	8, 12	C, D, L
No engine braking in [2] position.	9, 48	C, D, L
Slips in 1st gear.	8, 29, 44, 48	C, N, O, U
Slips in 2nd gear.	9, 20, 23, 30, 48, 49	C, L, U
Slips in 3rd gear.	10, 21, 23, 31, 44	C, L, U
Slips in 4th gear.	11, 23, 32	C, L, U
Slips in reverse gear.	34, 39, 40	C
Flares on 1–2 upshift.	2, 3, 15, 19, 30, 48	E, L, V
Flares on 2–3 upshift.	2, 3, 15, 20, 31, 44, 48	E, L, V
Flares on 3–4 upshift.	2, 3, 15, 21, 25, 32, 44	E, L, V
No upshift, transmission stays in 1st gear.	14, 19, 23	G, L
No downshift to 1st gear.	12, 19	G, L
Late upshift.	14	L, V
Erratic shifting.	14, 26	V
Harsh shift (up and down shifting).	2, 3, 4, 15, 23, 24, 25, 47	A, E, H, I, L, V
Harsh shift (1–2).	2, 9	C, D, V
Harsh shift (2–3).	2, 10, 23, 24	C, D, H, L, V
Harsh shift (3–4).	2, 11, 23, 25	C, D, I, L, V
Harsh kick-down shifts.	2, 3, 23, 26, 27	L, V, Q
Harsh kick-down shift (2–1).	8, 23, 48	O
Harsh downshift at closed throttle.	15	E, T
Harsh shift when manually shifting to [1] position.	33	L
Axle(s) slips out of transmission on turns.	43, 50	L, P, Q
Axle(s) stuck in transmission.	43	L, Q
Ratcheting noise when shifting into [R] position.	6, 7, 39, 40	K, L, Q
Loud popping noise when taking off in [R] position.	39, 40	L, Q
Ratcheting noise when shifting from [R] to [P] position or from [R] to [N] position.	38, 39, 40, 45	L, Q
Noise from transmission in all selector lever positions.	6, 17	K, L, Q
Noise from transmission only when wheels are rolling.	39, 42	L, Q
Gear whine, rpm related (pitch changes with shifts).	8, 41	K, L, Q
Gear whine, speed related (pitch changes with speed).	42	L, Q
Transmission will not shift into 4th gear in [D4] position.	1, 21, 25, 32	L
Lock-up clutch does not lock-up smoothly.	17, 36, 37	L
Lock-up clutch does not operate properly.	2, 3, 15, 18, 35, 36, 37	E, L, V
Transmission has multitude of problems shifting. At disassembly, large particles of metal are found on magnet.	42, 43	L, Q

	PROBABLE CAUSE
1.	Shift cable broken/out of adjustment.
2.	Throttle valve body/throttle valve misadjusted.
3.	Linear solenoid defective/damage.
4.	Wrong type ATF.
5.	Idle rpm too low/high.
6.	Oil pump worn or binding.
7.	Pressure regulator stuck.
8.	1st clutch defective.
9.	2nd clutch defective.
10.	3rd clutch defective.
11.	4th clutch defective.
12.	1st-hold clutch defective.
14.	Modulator valve stuck.
15.	Throttle valve stuck.
16.	ATF strainer clogged.
17.	Torque converter defective.
18.	Torque converter check valve stuck.
19.	1–2 shift valve stuck.
20.	2–3 shift valve stuck.
21.	3–4 shift valve stuck.
22.	Servo control valve stuck.
23.	Clutch pressure control (CPC) valve stuck.
24.	2–3 orifice control valve stuck.
25.	3–4 orifice control valve stuck.
26.	3rd kick-down valve stuck.
27.	4th kick-down valve stuck.
28.	4th exhaust valve stuck.
29.	1st accumulator defective.
30.	2nd accumulator defective.
31.	3rd accumulator defective.
32.	4th accumulator defective.
33.	1st-hold clutch defective.
34.	Servo valve stuck.
35.	Lock-up timing valve stuck.
36.	Lock-up shift valve stuck.
37.	Lock-up control valve stuck.
38.	Shift fork bent.
39.	Reverse gears worn/damaged (3 gears).
40.	Reverse selector worn.
41.	3rd gears worn/damaged (2 gears).
42.	Secondary gears worn/damaged (2 gears).
43.	Extension shaft worn.
44.	Feedpipe O-ring broken.
45.	4th gears worn/damaged (2 gears).
46.	Gear clearance incorrect.
47.	Clutch clearance incorrect.
48.	One-way (sprag) clutch defective.
49.	Sealing rings/guide worn.
50.	Axle-inboard joint clip missing.

(cont'd)

Hydraulic System

Symptom-to-Component Chart (cont'd)

The following symptoms can be caused by improper repair or assembly.	Check these items on the PROBABLE CAUSE DUE TO IMPROPER REPAIR	Items on the NOTES CHART
Car creeps in [N] position.	R1, R2	
Car does not move in [D4] or [D3] position.	R4	
Transmission locks up in [R] position.	R3	
Excessive drag in transmission.	R6	K, R
Excessive vibration, rpm related.	R7	
Noise with wheels moving only.	R1	
Main seal pops out.	R8	S
Various shifting problems.	R9, R10	
Harsh upshifts.	R11	

PROBABLE CAUSE DUE TO IMPROPER REPAIR	
R1.	Improper clutch clearance.
R2.	Improper gear clearance.
R3.	Parking brake lever installed upside down.
R4.	One-way (sprag) clutch installed upside down.
R5.	Reverse selector hub installed upside down.
R6.	Oil pump binding.
R7.	Torque converter not fully seated in oil pump.
R8.	Main seal improperly installed.
R9.	Springs improperly installed.
R10.	Valves improperly installed.
R11.	Ball check valves not installed.
R12.	Shift fork bolt not installed.

NOTES	
A.	See flushing procedure, page 14-178 and 179
B.	Set idle rpm in gear to specified idle speed. If still no good, adjust motor mounts as outlined in engine section of service manual.
C.	If the large cluch piston O-ring is broken, inspect the piston groove for rough machining.
D.	If the clutch pack is seized or is excessively worn, inspect the other clutches for wear and check the orifice control valves and throttle valve for free movement.
E.	If the throttle valve is stuck inspect the clutches for wear.
G.	If the 1—2 shift valve is stuck closed, the transmission will not upshift. If stuck open the transmission has no 1st gear.
H.	If the 2—3 orifice control valve is stuck, inspect the 2nd and 3rd clutch packs for wear.
I.	If the 3—4 orifice control valve is stuck, inspect the 3rd and 4th clutch packs for wear.
J.	If the clutch pressure control valve is stuck closed, the transmission will not shift out of 1st gear.
K.	Improper alignment of oil pump body and torque converter housing may cause oil pump seizure. The symptoms are mostly an rpm-related ticking noise or a high pitched squeak.

NOTES	
L.	If the ATF strainer is clogged with particles of steel or aluminum, inspect the oil pump. If OK and no cause for the contamination is found, replace the torque converter.
M.	If the 1st clutch feedpipe guide in the rear cover is scored by the mainshaft, inspect the ball bearing for excessive movement in the transmission housing. If OK, replace the rear cover as it is dented. The O-ring under the guide is probably worn.
N.	Replace the mainshaft if the bushings for the 1st and 4th feedpipe are loose or damaged. If the 1st feedpipe is damaged or out of round, replace it. If the 4th feedpipe is damaged or out of round, replace the rear cover.
O.	A worn or damaged sprag clutch is mostly a result of shifting the transmission in [D3] or [D4] position while the wheels rotate in reverse, such as rocking the car in snow.
P.	Inspect the frame for collision damage.
Q.	Inspect for damage or wear: 1. Reverse selector gear teeth chamfers. 2. Engagement teeth chamfers of countershaft 4th and reverse gear. 3. Shift fork for scuff marks in center. 4. Splines of extension shaft and secondary driven gear for wear. 5. Differential pinion shaft for wear under pinion gears. 6. Bottom of 3rd clutch for swirl marks. Replace items 1, 2, 3, 4 and 5 if worn or damaged. If transmission makes clicking, grinding or whirring noise, also replace mainshaft 4th gear and reverse idler gear and countershaft 4th gear in addition to 1, 2, 3, 4 or 5. If extension shaft, secondary driven gear and/or differential pinion shaft are worn, overhaul extension shaft, secondary driven gear and/or differential assembly and replace ATF strainer and thoroughly clean transmission, flush torque converter, cooler and lines. If bottom of 3rd clutch is swirled and transmission makes gear noise, replace the countershaft and secondary driven gear shaft.
R.	Be very careful not to damage the torque converter housing when replacing the main ball bearing. You may also damage the oil pump when you torque down the oil pump body. This will result in oil pump seizure if not detected. Use proper tools.
S.	Install the main seal flush with the torque converter housing. If you push it into the torque converter housing until it bottoms out, it will block the oil return passage and result in damage.
T.	Harsh downshifts when coasting to a stop with zero throttle may be caused by the linear solenoid not working.
U.	Check if servo valve cover is installed with snap ring. If they are not installed, the check valve may have been pushed out by hydraulic pressure causing a leak (internal), affecting all forward gears.
V.	Adjusting the throttle valve body, throttle valve, and linear solenoid are essential for proper operation of the transmission. Not only does it affect the shift quality if misadjusted, but also the lock-up clutch operation.

Road Test

NOTE: Warm up the engine to normal operating temperature (the radiator fan comes on).

1. Apply parking brake and block the wheels. Start the engine, then move the selector lever to [D4] position while depressing the brake pedal. Depress the accelerator pedal, and release it suddenly. Engine should not stall.
2. Repeat same test in [D3] positon.
3. Shift the selector lever to [D4] position and check that the shift points occur at approximate speeds shown. Also check for abnormal noise and clutch slippage.

NOTE: Throttle position sensor voltage represents the throttle opening.

—1. Connect the Test Harness between the ECM and connector (see section 11).
—2. Set the digital multimeter to check voltage between D11 (+) terminal and D22 (−) terminal for the throttle position sensor.

CAUTION:
- **All SRS electrical wiring harnesses are covered with yellow outer insulation.**
- **Before disconnecting the SRS wire harness, install the short connector(s) on the airbag(s).**
- **Replace the entire affected SRS harness assembly if it has an open circuit or damaged wiring.**

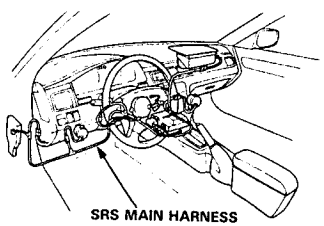

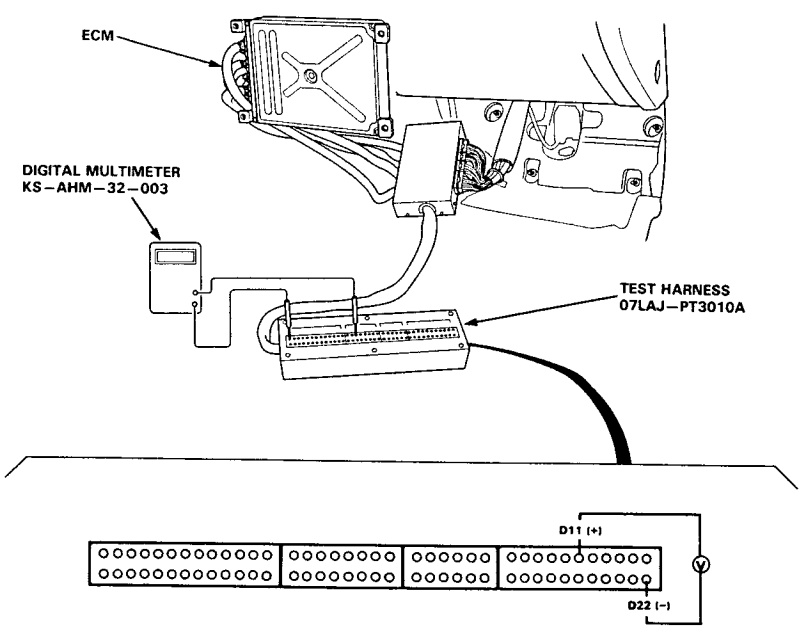

[D4] **Position**

- **Upshift**

	unit	1st → 2nd	2nd → 3rd	3rd → 4th	Lock-up Clutch ON
Throttle position sensor voltage: 0.753 V	mph	10-13	16.5—20	28—32.5	20.5—24.5
	km/h	16—21	27—32	45—52	33—39
Throttle position sensor voltage: 2.272 V	mph	18.5—22.5	30.5—36	44.5—50.5	65—73.5
	km/h	30—36	49—58	72—81	105—118
Full-opened throttle Throttle position sensor voltage: 4.55 V	mph	35.5—41	63—71.5	100.5—111.5	93—103.5
	km/h	57—66	101—115	162—179	150—167

- **Downshift**

	unit	Lock-up Clutch OFF	4th → 3rd	3rd → 2nd	2nd → 1st
Throttle position sensor voltage: 0.753 V	mph	17—20	18.5—22	6—9.5	6—9.5
	km/h	27—32	30—35	10—15	10—15
Throttle position sensor voltage: 2.272 V	mph	48—54	—	—	—
	km/h	77—87	—	—	—
Full-opened throttle Throttle position sensor voltage: 4.55 V	mph	80.5—91	87—97.5	53—60	26—31.5
	km/h	130—146	140—157	85—97	42—51

4. Accelerate to about 35 mph (57 km/h) so the transmssion is in 4th, then shift [D4] to [2] position. The car should immediately begin slowing down from engine braking.

   CAUTION: Do not shift from [D4] or [D3] position to [2] or [1] position at speeds over 62 mph (100 km/h); you may damage the transmission.

5. Check for abnormal noise and clutch slippage in the following positions.

   [1] (1st Gear) Position
   —1. Accelerate from a stop at full throttle. Check that there is no abnormal noise or clutch slippage.
   —2. Upshifts should not occur with the selector in this position.

   [2] (2nd Gear) Position
   —1. Accelerate from a stop at full throttle. Check that there is no abnormal noise or clutch slippage.
   —2. Upshifts and downshifts should not occur with the selector in this position.

   [R] (Reverse) Position
   Accelerate from a stop at full throttle, and check for abnormal noise and clutch slippage.

6. Test in [P] (Parking) Position
   Park car on slope (approx. 16°), apply the parking brake, and shift into [P] position. Release the brake; the car should not move.

Stall Speed

Test

CAUTION:
- **To prevent transmission damage, do not test stall speed for more than 10 seconds at a time.**
- **Do not shift the lever while raising the engine speed.**
- **Be sure to remove the pressure gauge before testing stall speed.**

1. Engage the parking brake and block all four wheels.
2. Connect the tachometer, and start the engine.
3. Make sure the A/C switch is OFF.
4. After the engine has warmed up to normal operating temperature (the radiator fan comes on), shift into [2] position.
5. Fully depress the brake pedal and accelerator for 6 to 8 seconds, and note engine speed.
6. Allow 2 minutes for cooling, then repeat the test in [1], [D4] and [R] positions.

NOTE:
- Stall speed tests should be used for diagnostic purposes only.
- Stall speed should be the same in [D4], [2], [1] and [R] positions.

Stall Speed RPM: 2,200—2,500 rpm

TROUBLE	PROBABLE CAUSE
Stall rpm high in [D4], [2], [1] and [R] positions	• Low fluid level or oil pump output • Clogged ATF strainer • Pressure regulator valve stuck closed • Slipping clutch
Stall rpm high in [1] position	• Slippage of 1st clutch, 1st-hold clutch or 1st gear one-way clutch
Stall rpm high in [2] position	• Slippage of 2nd clutch.
Stall rpm high in [D4] position	• Slippage of 1st clutch, 1st gear one-way clutch
Stall rpm high in [R] position	• Slippage of 4th clutch
Stall rpm low in [D4], [2], [1] and [R] positions	• Engine output low • Torque converter one-way clutch slipping

Fluid Level

Checking/Changing

Checking

NOTE: Check the fluid level with the engine at normal operating temperature (the radiator fan comes on).

1. Park the car on level ground. Shut off the engine.
2. Remove the dipstick (yellow loop) from the transmission and wipe it with a clean cloth.
3. Insert the dipstick into the transmission. Make sure the notch in the rubber cap fits in the dipstick guide and push the dipstick in all the way.

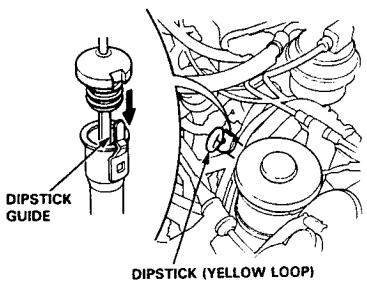

4. Remove the dipstick and check the fluid level. It should be between the upper and lower marks.

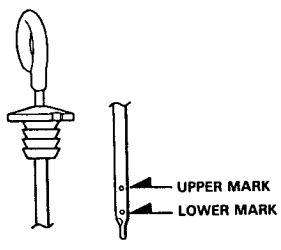

5. If the level is below the lower mark, add fluid into the tube to bring it to the upper mark. Use Honda Premium Formula Automatic Transmission Fluid or an equivalent DEXRON® II Automatic Transmission Fluid (ATF) only.
6. Insert the dipstick back in the transmission. Make sure the notch fits in the dipstick guide and the dipstick is down all the way.

Changing

1. Bring the transmission up to normal operating temperature (the radiator fan comes on) by driving the car. Park the car on level ground, turn the engine off, then remove drain plug.

   NOTE: If a cooler flusher is to be used, see page 14-178 and 179.

2. Reinstall the drain plug with a new washer, then refill the transmission to the upper mark on the dipstick.

   Automatic Transmission Fluid Capacity:
   2.5 ℓ (2.6 US qt., 2.2 Imp qt.) at change
   7.2 ℓ (7.6 US qt., 6.3 Imp qt.) at overhaul

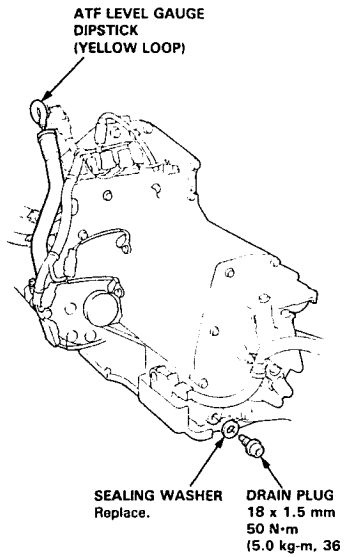

Pressure Testing

⚠WARNING
- **While testing, be careful of the rotating front wheels.**
- **Make sure lifts, jacks, and safety stands are placed properly (see section 1).**

CAUTION:
- **Before testing, be sure the transmission fluid is filled to the proper level.**
- **Warm up the engine before testing.**

1. Raise the car (see section 1).

2. Warm up the engine, then stop the engine and connect a tachometer.

3. Connect the oil pressure gauge to each inspection hole(s).

   TORQUE: 18 N·m (1.8 kg-m, 12 lb-ft)

   CAUTION: Connect the oil pressure gauge securely, be sure not to allow dust and other foreign particles to enter the inspection hole.

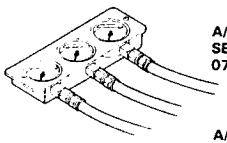

A/T OIL PRESSURE GAUGE SET W/PANEL 07406–0020400

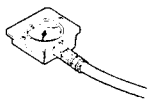

A/T LOW PRESSURE GAUGE W/PANEL 07406–0070300

A/T OIL PRESSURE HOSE, 2210 mm 07MAJ–PY4011A (4 Required)

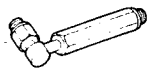

A/T OIL PRESSURE HOSE ADAPTER 07MAJ–PY40120 (4 Required)

NOTE: Use the A/T Oil Pressure Gauge Set (07406–0020003) or A/T Low Pressure Gauge (07406–0070000), and the oil pressure gauge hoses and adapters shown above.

4. Start the engine and measure the respective pressure as follows.
   - Line Pressure
   - Clutch Pressure
   - Clutch Low/High Pressure
   - Throttle B Pressure
   - Modulator Pressure

5. Install a new washer and the sealing bolt in the inspection hole and tighten to the secified torque.

   TORQUE: 18 N·m (1.8 kg-m, 12 lb-ft)

   NOTE: Do not reuse old aluminum washers.

- **Line Pressure Measurement**

–1. Set the parking brake and block both rear wheels securely.

–2. Run the engine at 2,000 rpm.

–3. Shift the select lever to [N] or [P] position.

   NOTE: Higher pressures may be indicated if measurements are made in selector positions other than [N] or [P] position.

–4. Measure line pressure.

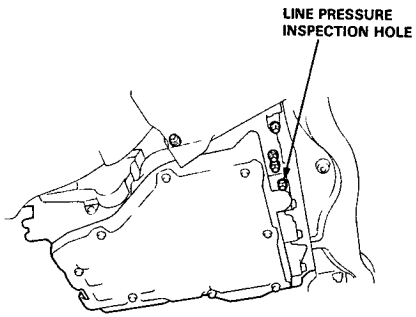

PRESSURE	SELECTOR POSITION	SYMPTOM	PROBABLE CAUSE	FLUID PRESSURE	
				Standard	Service Limit
Line	[N] or [P]	No (or low) line pressure	Torque converter, oil pump pressure regulator, torque converter check valve, oil pump.	850–900 kPa (8.5–9.0 kg/cm², 121–128 psi)	800 kPa (8.0 kg/cm², 114 psi)

NOTE: Higher pressures may be indicated if measurements are made in selector positions other than [N] or [P] position.

- **Clutch Pressure Measurement**

⚠WARNING **While testing, be careful of the rotating front wheels.**

–1. Set the parking brake and block both rear wheels securely.
–2. Raise the front of the car and support with safety stands.
–3. Allow the front wheels to rotate freely.
–4. Run the engine at 2,000 rpm.
–5. Measure each clutch pressure.

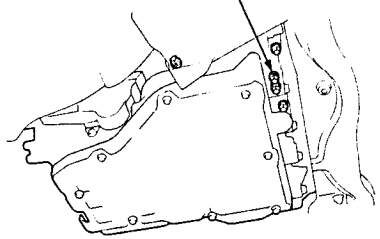

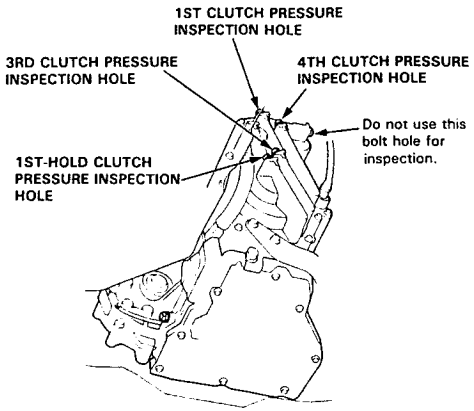

PRESSURE	SELECTOR POSITION	SYMPTOM	PROBABLE CAUSE	FLUID PRESSURE	
				Standard	Service Limit
1st Clutch	[1] or [D4]	No or low 1st pressure	1st Clutch	850–900 kPa (8.5–9.0 kg/cm², 121–128 psi)	800 kPa (8.0 kg/cm², 114 psi)
1st-hold Clutch	[1]	No or low 1st-hold pressure	1st-hold Clutch		
2nd Clutch	[2]	No or low 2nd pressure	2nd Clutch		
2nd Clutch	[D4]	No or low 2nd pressure	2nd Clutch	500 kPa (5.0 kg/cm², 71 psi) (throttle fully closed) 900 kPa (9.0 kg/cm², 128 psi) (throttle more than 1/4 opened)	450 kPa (4.5 kg/cm², 64 psi) (throttle fully closed) 800 kPa (8.0 kg/cm², 114 psi) (throttle more than 1/4 opened)
3rd Clutch		No or low 3rd pressure	3rd Clutch		
4th Clutch		No or low 4th pressure	4th Clutch		
	[R]		Servo Valve or 4th Clutch	850–900 kPa (8.5–9.0 kg/cm², 121–128 psi)	800 kPa (8.0 kg/cm², 114 psi)

(cont'd)

Pressure Testing

(cont'd)

- **Clutch Low/High Pressure Measurement**

⚠WARNING While testing, be careful of the rotating front wheels.

–1. Allow the front wheels to rotate freely.

–2. Start the engine and let it idle.

–3. Shift the select lever to [D4] position.

–4. Slowly press down the accelerator pedal to increase engine rpm until pressure is indicated on the oil pressure gauge. Then release the accelerator pedal, allowing the engine return to an idle, and measure the pressure reading.

–5. With the engine idling, press down the accelerator pedal approximately 1/2 of its possible travel and increase the engine rpm until pressure is indicated on the gauge, then measure the highest pressure reading obtained.

–6. Repeat Steps –4. and –5. for each clutch pressure being inspected.

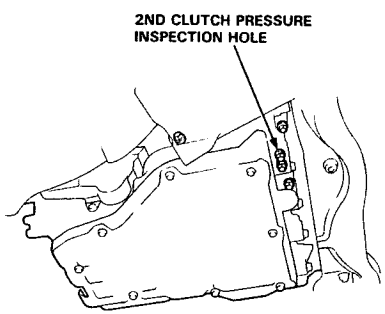

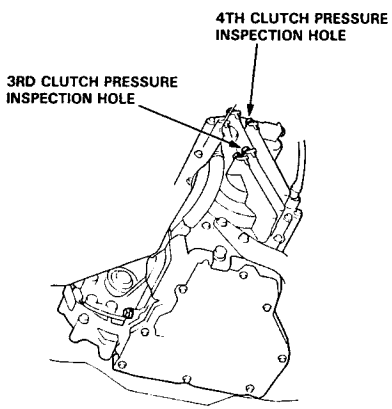

PRESSURE	SELECTOR POSITION	SYMPTOM	PROBABLE CAUSE	FLUID PRESSURE	
				Standard	Service Limit
2nd Clutch	[D4]	No or low 2nd pressure	2nd Clutch	500–900 kPa (5.0–9.0 kg/cm², 71–128 psi) varies with throttle opening	450 kPa (4.5 kg/cm², 64 psi) with accelerator pedal released 800 kPa (8.0 kg/cm², 114 psi) with accelerator pedal more than 1/4 opened
3rd Clutch		No or low 3rd pressure	3rd Clutch		
4th Clutch		No or low 4th pressure	4th Clutch		

- **Throttle B Pressure Measurement**

⚠WARNING While testing, be careful of the rotating front wheels.

–1. Allow the front wheels to rotate freely.

–2. Disconnect the transmission sub-harness connector.

–3. Shift the select lever to [D4] position.

–4. Run the engine at 1,000 rpm.

–5. Measure full open throttle B pressure.

–6. Connect battery voltage to the linear solenoid terminals of the transmission sub-harness connector.

–7. Measure full closed throttle B pressure.

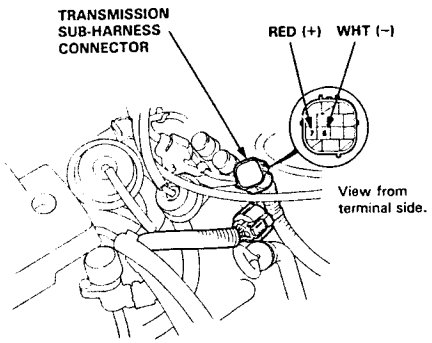

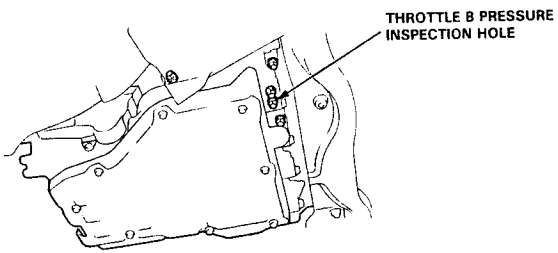

PRESSURE	SELECTOR POSITION	SYMPTOM	PROBABLE CAUSE	FLUID PRESSURE	
				Standard	Service Limit
Throttle B	[D4]	Pressure too high	Throttle Valve Body Assembly	0 kPa (0 kg/cm², 0 psi) throttle full closed	—
		No or low pressure		500–530 kPa (5.0–5.3 kg/cm², 71–75 psi) throttle full opened	470 kPa (4.7 kg/cm², 67 psi) throttle full opened

(cont'd)

Pressure Testing

(cont'd)

- **Modulator Pressure Measurement**

—1. Set the parking brake and block both rear wheels securely.

—2. Run the engine at 2,000 rpm.

—3. Shift the select lever to [N] or [P] position.

—4. Measure modulator pressure.

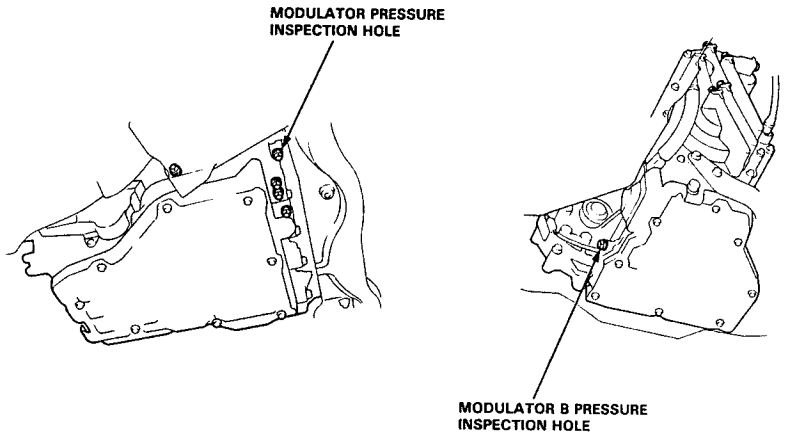

PRESSURE	SELECTOR POSITION	SYMPTOM	PROBABLE CAUSE	FLUID PRESSURE	
				Standard	Service Limit
Modulator	[N] or [P]	No or low modulator pressure	Modulator Valve	460–510 kPa (4.6–5.1 kg/cm², 65–73 psi)	410 kPa (4.1 kg/cm², 58 psi)
		No or low modulator pressure	Shift Control Solenoid Valve Assembly		

Lower Valve Body Assembly

Removal/Installation

WARNING **Make sure lifts, jacks and safety stands are placed properly (see section 1).**

1. Raise the car (see section 1).
2. Remove the transmission under-guard.
3. Remove the drain plug and drain the automatic transmission fluid (ATF). Reinstall the drain plug with a new sealing washer.

   TORQUE: 50 N·m (5.0 kg-m, 36 lb-ft)

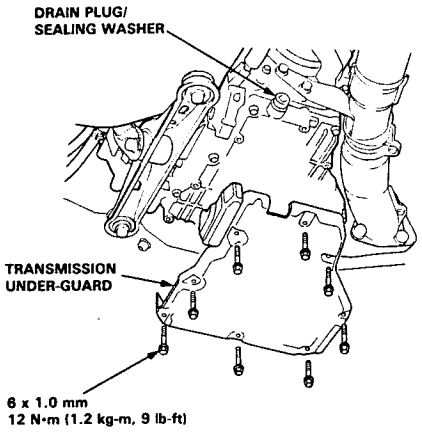

4. Remove the transmission mount and mount bracket.

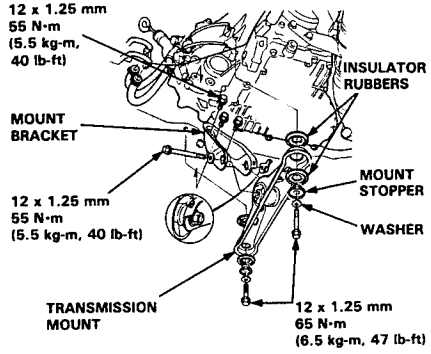

5. Disconnect the shift control solenoid valve connector from the transmission sub-harness.
6. Remove the lower valve body assembly from the transmission housing following the numbered sequence.

   NOTE: Shift the control shaft to [P] position and push the shift fork shaft to the drive position as shown.

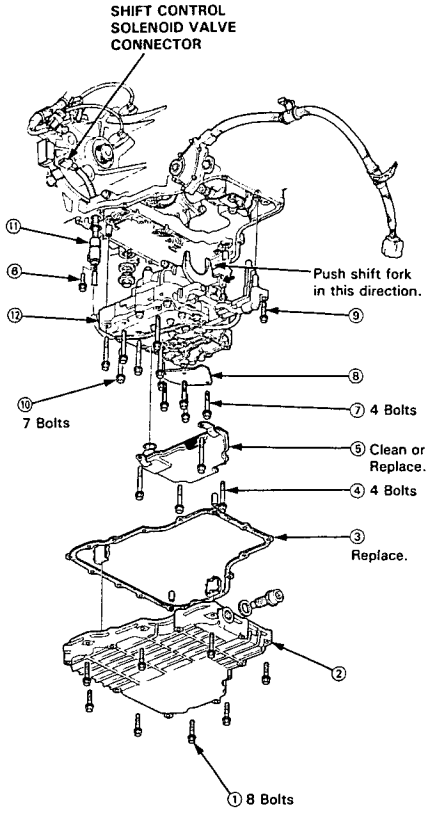

(cont'd)

Lower Valve Body Assembly

Removal/Installation (cont'd)

7. Install the lower valve body assembly in the reverse order of removal.

   —1. Assemble the lower valve body assembly (see page 14-99).

   —2. Install the lower valve body assembly with the thirteen bolts as shown.

   TORQUE: 12 N·m (1.2 kg-m, 9 lb-ft)

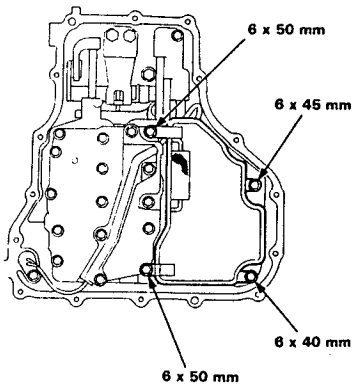

   —3. Install the ATF strainer on the lower valve body assembly with the four bolts as shown.

   TORQUE: 12 N·m (1.2 kg-m, 9 lb-ft)

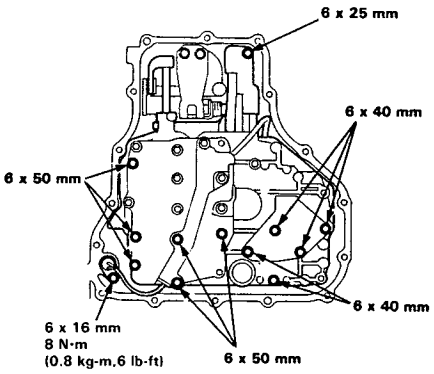

   —4. Install the oil pan with eight bolts as shown.

   TORQUE: 12 N·m (1.2 kg-m, 9 lb-ft)

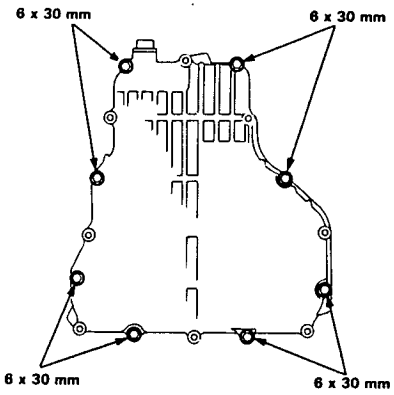

Disassembly/Reassembly

NOTE:
- Clean all parts thoroughly in solvent or carburetor cleaner and dry with compressed air.
- Blow out all passages.
- Coat all parts with ATF before reassembly.
- Replace the filters.
- Install the filters in the direction shown.

CAUTION: Do not use a magnet to remove the check balls; it may magnetize the balls.

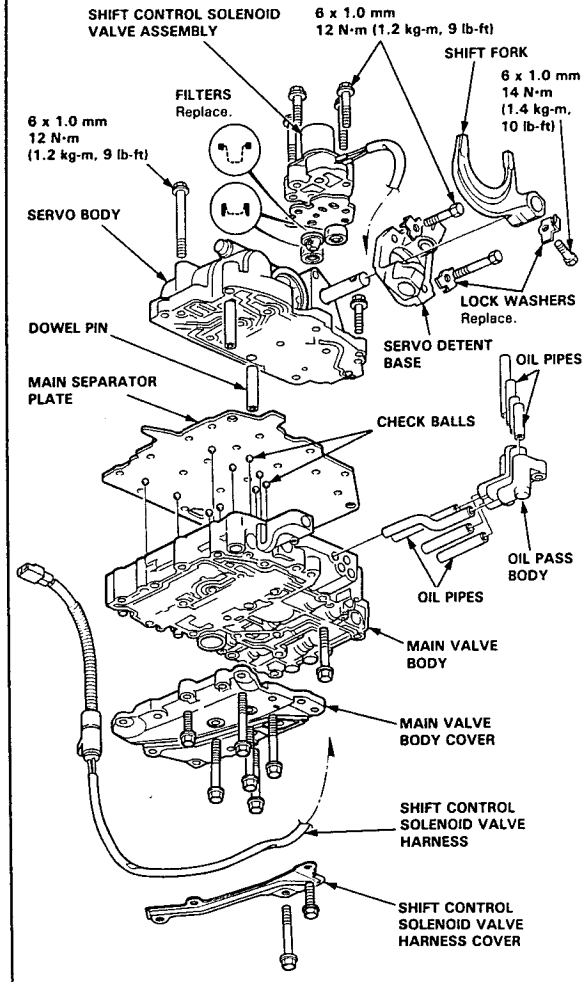

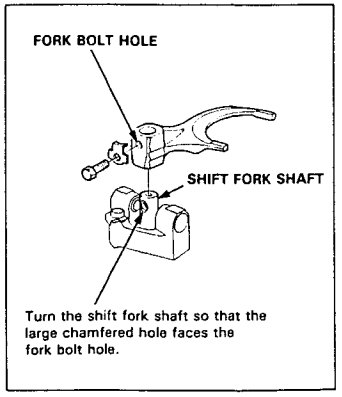

6 mm BOLT LENGTH

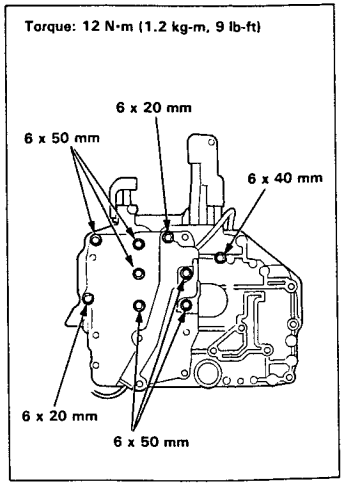

Shift Control Solenoid Valve

Replacement

NOTE: Shift control solenoid valve A and B must be replaced as an assembly

1. Remove the lower valve body assembly.
2. Remove the harness cover.
3. Remove the shift control solenoid valve assembly from the servo body.
4. Check the shift control solenoid valve oil passages for dust or dirt, and replace as an assembly, if necessary.
5. Clean the mounting surface and oil passages.

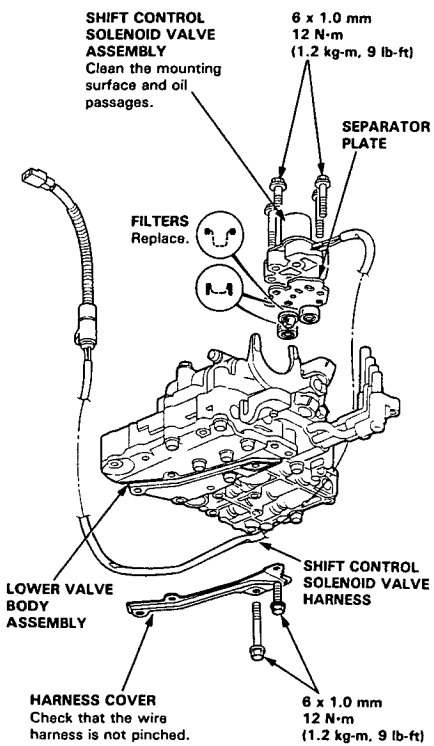

Transmission

Removal

WARNING **Make sure lifts are placed properly, and hoist brackets are attached to the correct position on the engine (see section 1).**

CAUTION: Use fender covers to avoid damaging painted surfaces.

NOTE: The radio may have a coded theft protection circuit. Be sure to get the customer's code number before
- Disconnecting the battery.
- Removing the No. 39 (10 A) fuse in the under-hood fuse/relay box.
- Removing the radio.

After service, reconnect power to the radio and turn it on. When the word "CODE" is displayed, enter the customer's 5-digit code to restore radio operation.

1. Disconnect the battery negative (−) and positive (+) cables from the battery.
2. Remove the battery set plate.
3. Remove the battery with the battery box.
4. Remove the under-hood ABS fuse/relay box.
5. Remove the sub-ground cable.
6. Remove the heat shield.

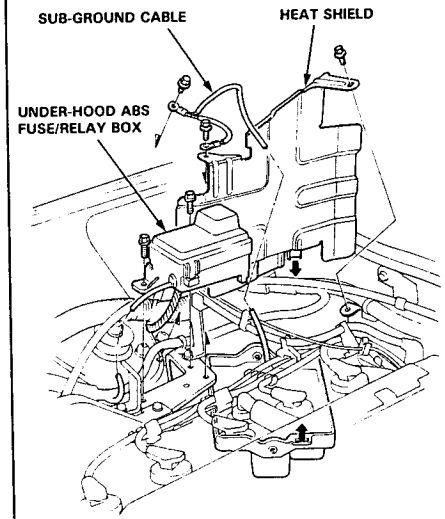

7. Remove the distributor.
8. Disconnect the connector from the control box, then remove the control box.

   CAUTION: Do not disconnect the vacuum tubes from the control box.

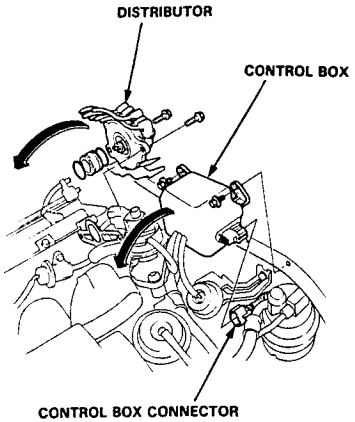

9. Remove the torque converter cover.
10. Remove the eight drive plate bolts one at a time while rotating the crankshaft pulley.

    NOTE: If necessary, remove the spark plugs while removing the drive plate bolts.

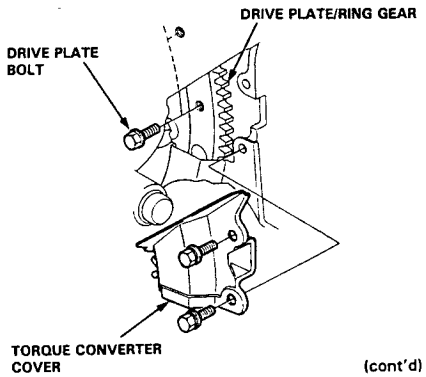

(cont'd)

Transmission

Removal (cont'd)

11. Disconnect the transmission sub-harness connector.

12. Remove the transmission ground cable.

13. Remove the transmission housing mounting bolts and the 26 mm shim.

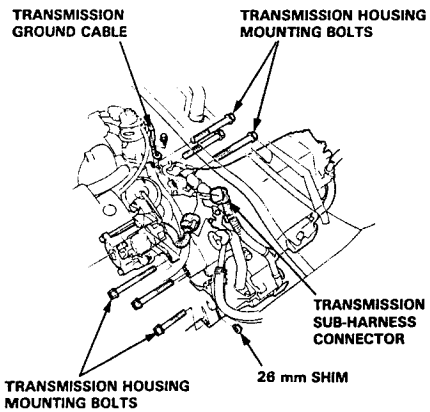

14. Remove the transmission under-guard.

15. Remove the drain plug and drain the automatic transmission fluid (ATF). Reinstall the drain plug with a new sealing washer.

TORQUE: 50 N·m (5.0 kg-m, 36 lb-ft)

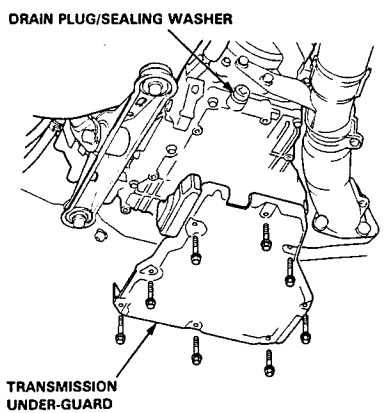

16. Remove the transmission mount and mount bracket.

17. Remove the ATF cooler hoses at the joint pipes. Turn the ends of the cooler hoses up to prevent ATF from flowing out, then plug the joint pipes.

NOTE: Check for any signs of leakage at the hose joints.

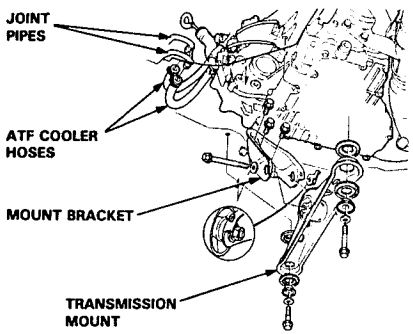

18. Shift to [P] position by rotating the control shaft.

19. Remove the secondary cover and 33 mm sealing bolt.

20. Remove the extension shaft from the differential using the special tool as shown.

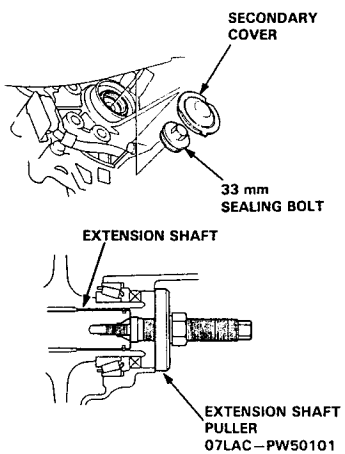

21. Remove the two bolts from exhaust pipe A stay.

22. Remove exhaust pipe A.

23. Remove the exhaust manifold stay.

24. Remove the shift cable cover.

25. Remove the control lever from the control shaft.

26. Remove the shift cable holder from the transmission housing.

CAUTION: Take care not to bend the shift cable.

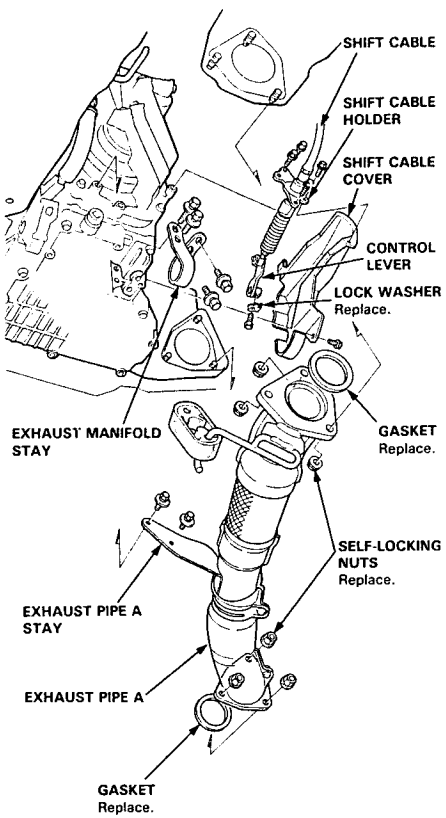

27. Disconnect the A/T gear position switch connector then remove the harness stay.

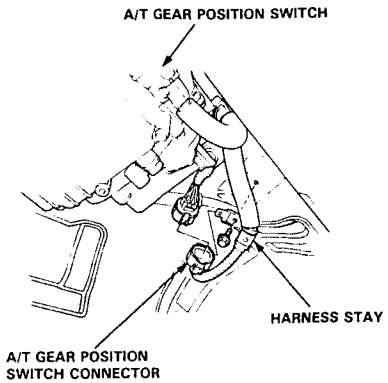

28. Remove the transmission mid mount nuts.

29. Place a jack under the transmission and raise the transmission just enough to take weight off of the mounts, then remove the mid mounts and mid mount spacer.

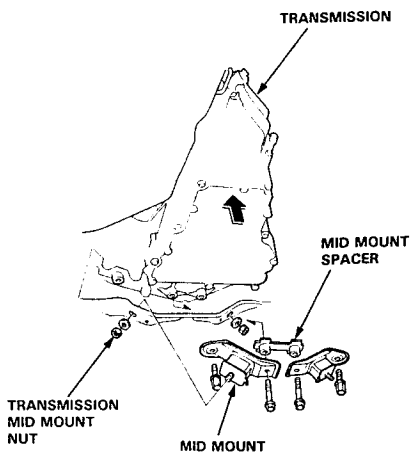

(cont'd)

Removal (cont'd)

30. Remove the transmission housing mounting bolts.

31. Remove the torque converter cover mounting bolt on the torque converter housing side.

    NOTE: Do not remove the torque converter cover mounting bolt on the differential carrier side, or the torque converter cover.

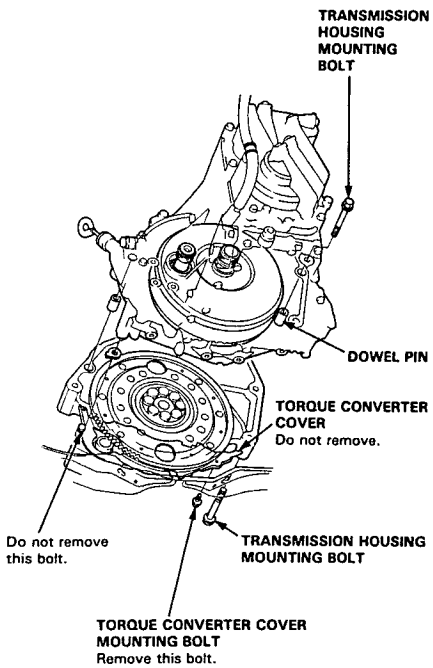

32. Pull the transmission away from the engine until it clears the dowel pin, then lower it on the transmission jack.

Illustrated Index

Housing/Lower Valve Body

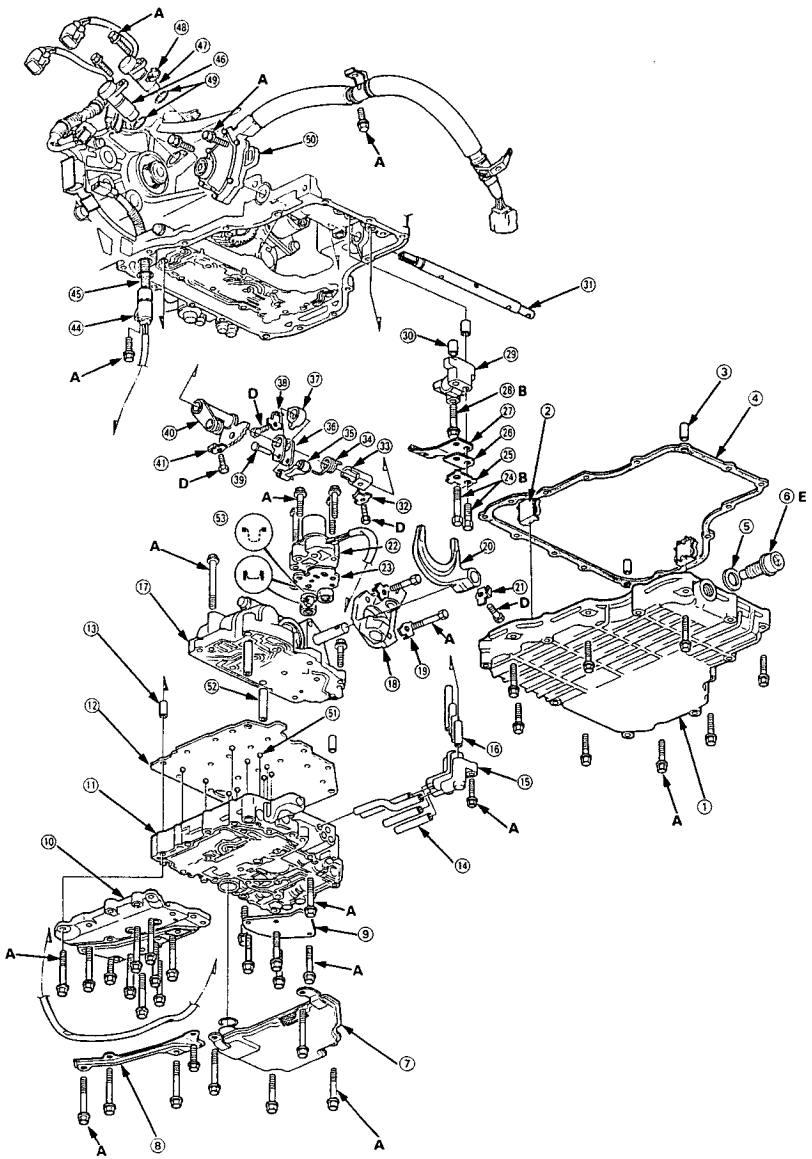

① TRANSMISSION OIL PAN
② ATF MAGNET Clean.
③ DOWEL PIN
④ OIL PAN GASKET Replace.
⑤ SEALING WASHER Replace.
⑥ DRAIN PLUG
⑦ ATF STRAINER Clean.
⑧ HARNESS COVER
⑨ MAIN VALVE BODY PLATE
⑩ MAIN VALVE BODY COVER
⑪ MAIN VALVE BODY
⑫ MAIN SEPARATOR PLATE
⑬ DOWEL PIN
⑭ OIL PIPES
⑮ OIL PASS BODY
⑯ OIL PIPES
⑰ SERVO BODY
⑱ SERVO DETENT BASE
⑲ LOCK WASHER Replace.
⑳ SHIFT FORK
㉑ LOCK WASHER Replace.
㉒ SHIFT CONTROL SOLENOID VALVE ASSEMBLY
㉓ SHIFT CONTROL SOLENOID VALVE SEPARATOR PLATE
㉔ SPECIAL BOLTS
㉕ LOCK WASHER Replace.
㉖ DETENT SPRING PLATE
㉗ DETENT SPRING
㉘ SPECIAL BOLT
㉙ PARKING BRAKE ROLLER GUIDE
㉚ DOWEL PIN
㉛ CONTROL SHAFT
㉜ LOCK WASHER Replace.
㉝ CONTROL SHAFT COLLAR
㉞ PARKING BRAKE SHIFT ARM SPRING
㉟ PARKING BRAKE ROLLER ROD
㊱ PARKING BRAKE SHIFT ARM
㊲ PARKING BRAKE STOPPER
㊳ LOCK WASHER Replace.
㊴ SHIFT ARM ROLLER
㊵ DETENT LEVER
㊶ LOCK WASHER Replace.
㊹ SHIFT CONTROL SOLENOID VALVE HARNESS/CONNECTOR
㊺ O-RING Replace.
㊻ COUNTERSHAFT SPEED SENSOR
㊼ MAINSHAFT SPEED SENSOR
㊽ MAINSHAFT SPEED SENSOR WASHER
㊾ O-RINGS Replace.
㊿ A/T GEAR POSITION SWITCH
(51) CHECK BALLS
(52) OIL PIPES
(53) FILTERS

TORQUE SPECIFICATIONS

No.	Torque Value	Bolt Size	Remarks
A	12 N·m (1.2 kg-m, 9 lb-ft)	6 x 1.0 mm	
B	30 N·m (3.0 kg-m, 22 lb-ft)	8 x 1.25 mm	
D	14 N·m (1.4 kg-m, 10 lb-ft)	6 x 1.0 mm	
E	50 N·m (5.0 kg-m, 36 lb-ft)	18 x 1.5 mm	Drain Plug

Illustrated Index

Rear Cover

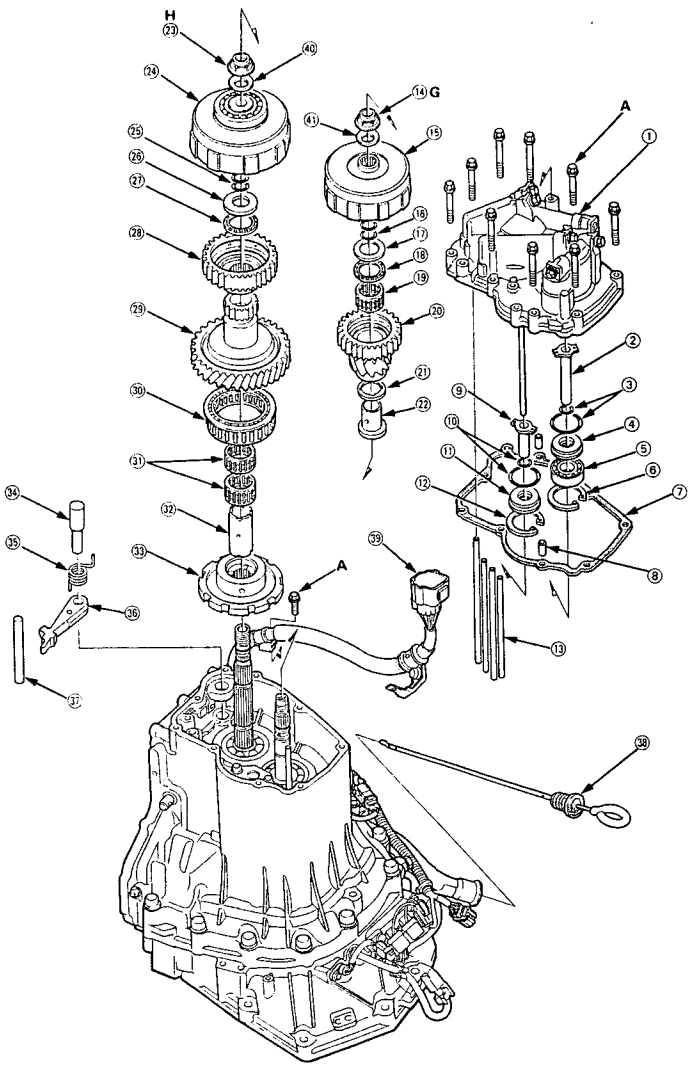

① REAR COVER
② 1ST CLUTCH FEED PIPE
③ O-RINGS Replace.
④ FEED PIPE GUIDE
⑤ BALL BEARING
⑥ SNAP RING, 38 mm
⑦ REAR COVER GASKET Replace.
⑧ DOWEL PIN
⑨ 1ST-HOLD CLUTCH FEED PIPE
⑩ O-RINGS Replace.
⑪ FEED PIPE GUIDE
⑫ SNAP RING, 38 mm
⑬ OIL PIPES
⑭ MAINSHAFT LOCKNUT, 24 x 1.25 mm (Flange nut) Replace.
⑮ 1ST CLUTCH ASSEMBLY
⑯ O-RINGS Replace.
⑰ THRUST WASHER
⑱ THRUST NEEDLE BEARING
⑲ NEEDLE BEARING
⑳ MAINSHAFT 1ST GEAR
㉑ THRUST WASHER
㉒ MAINSHAFT 1ST GEAR COLLAR
㉓ COUNTERSHAFT LOCKNUT, 24 x 1.25 mm (Flange nut) Replace.
㉔ 1ST-HOLD CLUTCH ASSEMBLY
㉕ O-RINGS Replace.
㉖ THRUST WASHER
㉗ THRUST NEEDLE BEARING
㉘ 1ST HOLD CLUTCH HUB
㉙ COUNTERSHAFT 1ST GEAR
㉚ ONE-WAY CLUTCH
㉛ NEEDLE BEARINGS
㉜ COUNTERSHAFT 1ST GEAR COLLAR
㉝ PARKING GEAR
㉞ PARKING BRAKE PAWL SHAFT
㉟ PARKING BRAKE PAWL SPRING
㊱ PARKING BRAKE PAWL
㊲ PARKING BRAKE PAWL STOPPER
㊳ ATF LEVEL GAUGE DIPSTICK
㊴ TRANSMISSION SUB-HARNESS
㊵ COUNTERSHAFT DISC SPRING Replace.
㊶ MAINSHAFT DISC SPRING Replace.

TORQUE SPECIFICATIONS

No.	Torque Value	Bolt Size	Remarks
A	12 N·m (1.2 kg-m, 9 lb-ft)	6 x 1.0 mm	
G	140 N·m (14.0 kg-m, 101 lb-ft)	24 x 1.25 mm	Mainshaft Locknut: Left-hand threads
H	140 N·m (14.0 kg-m, 101 lb-ft)	24 x 1.25 mm	Countershaft Locknut

Illustrated Index

Transmission Housing

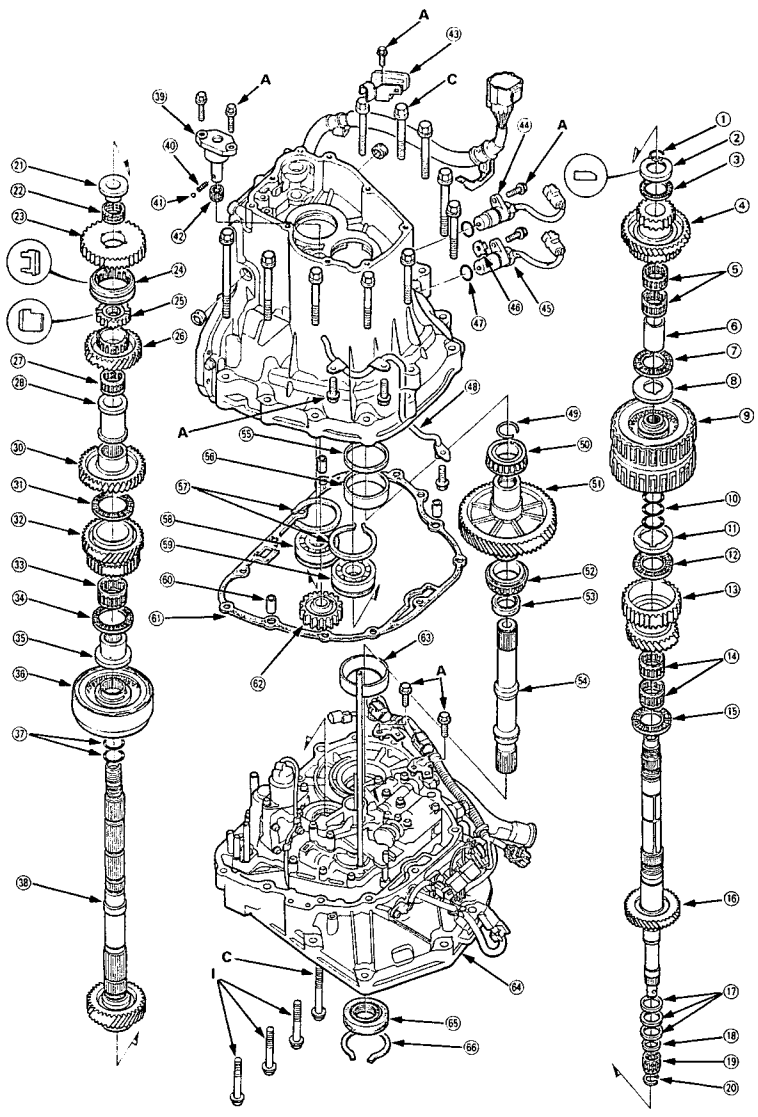

① SNAP RING, 28 mm
② THRUST WASHER
③ THRUST NEEDLE BEARING
④ MAINSHAFT 4TH/REVERSE GEAR
⑤ NEEDLE BEARINGS
⑥ MAINSHAFT 4TH GEAR COLLAR
⑦ THRUST NEEDLE BEARING
⑧ THRUST WASHER
⑨ 4TH/2ND CLUTCH ASSEMBLY
⑩ O-RINGS Replace.
⑪ 2ND GEAR THRUST WASHER, 37.5 x 56 mm Selective part
⑫ THRUST NEEDLE BEARING
⑬ MAINSHAFT 2ND GEAR
⑭ NEEDLE BEARINGS
⑮ THRUST NEEDLE BEARING
⑯ MAINSHAFT/3RD GEAR
⑰ SEALING RINGS, 35 mm
⑱ SEALING RING, 29 mm
⑲ NEEDLE BEARING
⑳ SET RING
㉑ COUNTERSHAFT REVERSE GEAR COLLAR
㉒ NEEDLE BEARING
㉓ COUNTERSHAFT REVERSE GEAR
㉔ REVERSE SELECTOR
㉕ REVERSE SELECTOR HUB
㉖ COUNTERSHAFT 4TH GEAR
㉗ NEEDLE BEARING
㉘ DISTANCE COLLAR Selective part
㉚ COUNTERSHAFT 2ND GEAR
㉛ THRUST NEEDLE BEARING
㉜ COUNTERSHAFT 3RD GEAR
㉝ NEEDLE BEARING
㉞ THRUST NEEDLE BEARING
㉟ COUNTERSHAFT 3RD GEAR COLLAR
㊱ 3RD CLUTCH ASSEMBLY
㊲ O-RINGS Replace.
㊳ COUNTERSHAFT
㊴ REVERSE IDLER GEAR SHAFT HOLDER
㊵ REVERSE IDLER GEAR SHAFT SPRING
㊶ STEEL BALL
㊷ NEEDLE BEARING
㊸ CONNECTOR HOLDER
㊹ COUNTERSHAFT SPEED SENSOR
㊺ MAINSHAFT SPEED SENSOR
㊻ MAINSHAFT SPEED SENSOR WASHER
㊼ O-RING Replace.
㊽ LUBRICATION PIPE
㊾ SET RING Replace.
㊿ TAPERED ROLLER BEARING
(51) SECONDARY DRIVEN GEAR/SECONDARY DRIVEN GEAR SHAFT
(52) TAPERED ROLLER BEARING
(53) SECONDARY GEAR SHAFT OIL SEAL Replace.
(54) EXTENSION SHAFT
(55) THRUST SHIM, 68 mm Selective part
(56) BEARING OUTER RACE
(57) SNAP RINGS
(58) TRANSMISSION HOUSING COUNTERSHAFT BEARING
(59) TRANSMISSION HOUSING MAINSHAFT BEARING
(60) DOWEL PIN
(61) TRANSMISSION HOUSING GASKET Replace.
(62) REVERSE IDLER GEAR
(63) BEARING OUTER RACE
(64) TORQUE CONVERTER HOUSING
(65) TORQUE CONVERTER HOUSING OIL SEAL Replace.
(66) SNAP RING, 74 mm

TORQUE SPECIFICATIONS

No.	Torque Value	Bolt Size	Remarks
A	12 N·m (1.2 kg-m, 9 lb-ft)	6 x 1.0 mm	
C	45 N·m (4.5 kg-m, 33 lb-ft)	10 x 1.25 mm	
I	34 N·m (3.4 kg-m, 25 lb-ft)	8 x 1.25 mm	

Illustrated Index

Torque Converter Housing/Valve Body

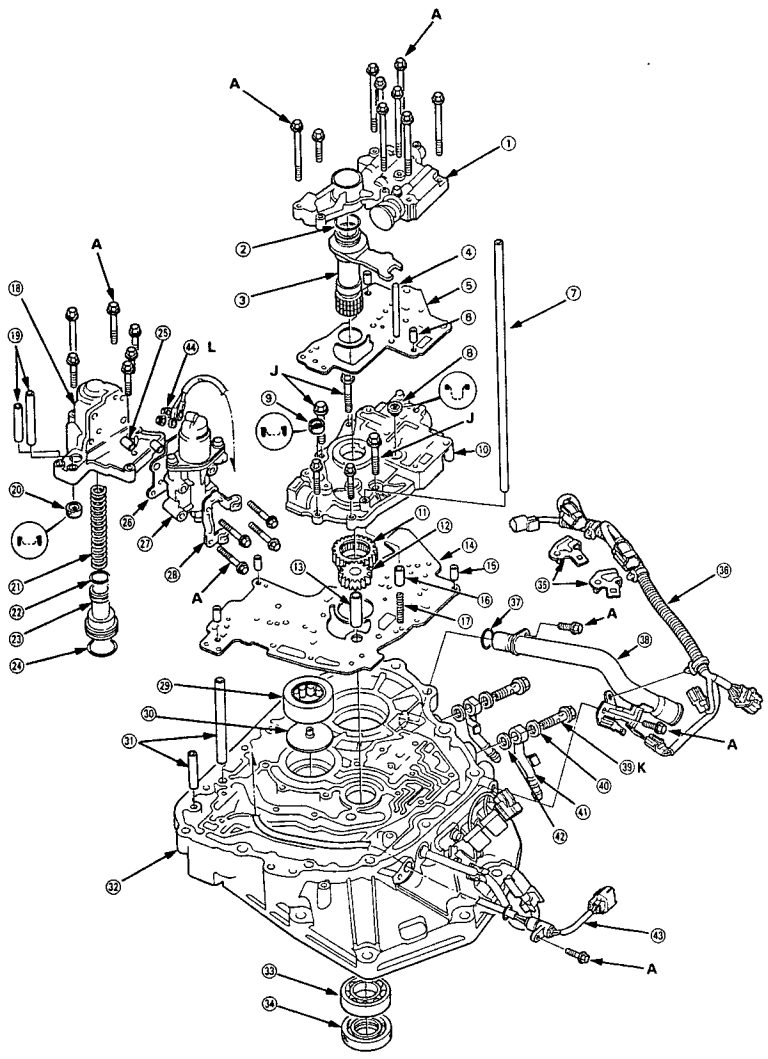

① REGULATOR VALVE BODY
② O-RING Replace.
③ STATOR SHAFT
④ STOPPER SHAFT
⑤ REGULATOR SEPARATOR PLATE
⑥ DOWEL PIN
⑦ OIL FEED PIPE
⑧ FILTER Replace.
⑨ FILTER Replace.
⑩ OIL PUMP BODY
⑪ OIL PUMP DRIVE GEAR
⑫ OIL PUMP DRIVEN GEAR
⑬ OIL PUMP DRIVEN GEAR SHAFT
⑭ OIL PUMP BODY SEPARATOR PLATE
⑮ DOWEL PIN
⑯ TORQUE CONVERTER CHECK VALVE
⑰ TORQUE CONVERTER CHECK VALVE SPRING
⑱ 2ND ACCUMULATOR BODY
⑲ OIL PIPES
⑳ FILTER Replace.
㉑ 2ND ACCUMULATOR SPRING
㉒ O-RING Replace.
㉓ 2ND ACCUMULATOR PISTON
㉔ O-RING Replace.
㉕ DOWEL PIN
㉖ THROTTLE VALVE BODY SEPARATOR PLATE
㉗ THROTTLE VALVE BODY
㉘ HARNESS CLAMP
㉙ TORQUE CONVERTER HOUSING COUNTERSHAFT NEEDLE BEARING
㉚ OIL GUIDE PLATE
㉛ OIL PIPES
㉜ TORQUE CONVERTER HOUSING
㉝ TORQUE CONVERTER HOUSING MAINSHAFT BALL BEARING
㉞ OIL SEAL Replace.
㉟ CONNECTOR HOLDERS
㊱ TRANSMISSION SUB-HARNESS
㊲ O-RING Replace.
㊳ ATF LEVEL GAUGE PIPE
㊴ JOINT BOLT
㊵ SEALING WASHER Replace.
㊶ ATF COOLER PIPE
㊷ SEALING WASHER Replace.
㊸ LINEAR SOLENOID HARNESS
㊹ FLANGE NUT, 5 mm

TORQUE SPECIFICATIONS

No.	Torque Value	Bolt Size	Remarks
A	12 N·m (1.2 kg-m, 9 lb-ft)	6 x 1.0 mm	
J	18 N·m (1.8 kg-m, 13 lb-ft)	8 x 1.25 mm	
K	29 N·m (2.9 kg-m, 21 lb-ft)	12 x 1.25 mm	Joint Bolt
L	8 N·m (0.8 kg-m, 6 lb-ft)	5 x 0.8 mm	Flange Nut

Transmission Housing/Lower Valve Body Assembly

Removal

NOTE:
- Clean all parts thoroughly in solvent or carburetor cleaner and dry with compressed air.
- Blow out all passages.
- When removing the lower valve body assembly, replace the following:
  - O-rings
  - Oil pan gasket
  - Sealing washer

CAUTION: Do not turn over the transmission before removing the oil pan.

1. Remove the eight bolts securing the oil pan then remove the oil pan and oil pan gasket.

2. Disconnect the shift control solenoid valve connector from the tansmission sub-harness connector.

3. Shift the control shaft to [P] position by turning the detent lever.

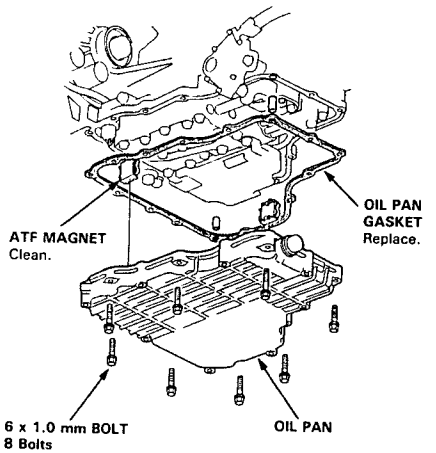

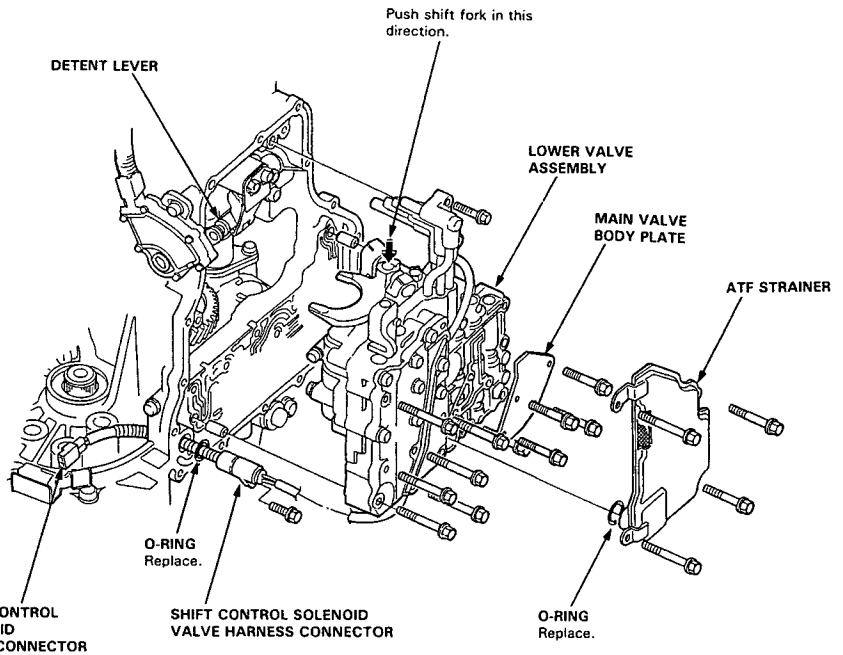

4. Remove the four bolts securing the ATF strainer then remove the ATF strainer.

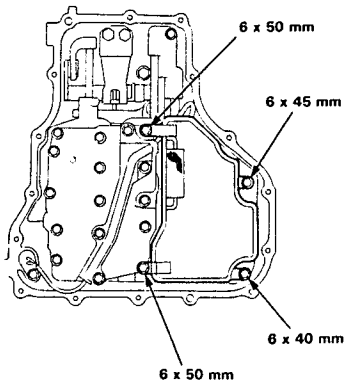

5. Remove the four bolts securing the main valve body plate then remove the main valve body plate.

6. Remove the four bolts securing the harness cover then remove the harness cover.

7. Remove the bolt securing the shift control solenoid valve harness connector then remove the connector.

8. Push the shift fork shaft to the torque converter side.

9. Remove the six bolts securing the lower valve body assembly then remove the lower valve body assembly.

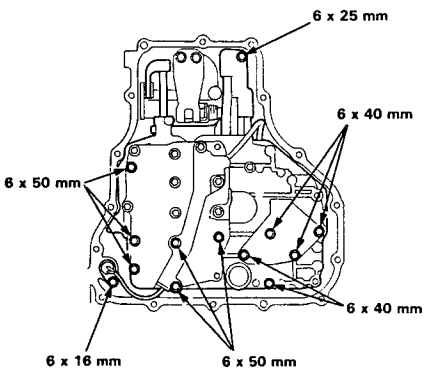

10. Clean the inlet opening of the ATF strainer thoroughly with compressed air, then check that it is in good condition, and the inlet opening is not clogged.

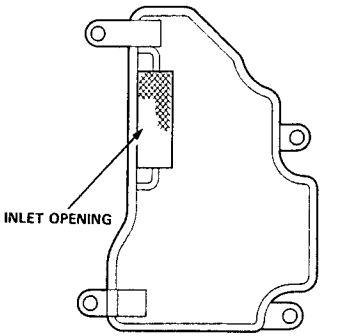

ATF STRAINER

11. Replace the ATF strainer if it is clogged or damaged.

    NOTE: The ATF strainer can be reused if it is not clogged.

12. Remove the ATF magnet from the oil pan then clean the ATF magnet.

Rear Cover

Removal

NOTE:
- Clean all parts thoroughly in solvent or carburetor cleaner and dry with compressed air.
- Blow out all passages.
- When removing the rear cover, replace the following:
  - O-rings
  - Rear cover gasket
  - Mainshaft and countershaft locknuts
  - Mainshaft and countershaft disc springs

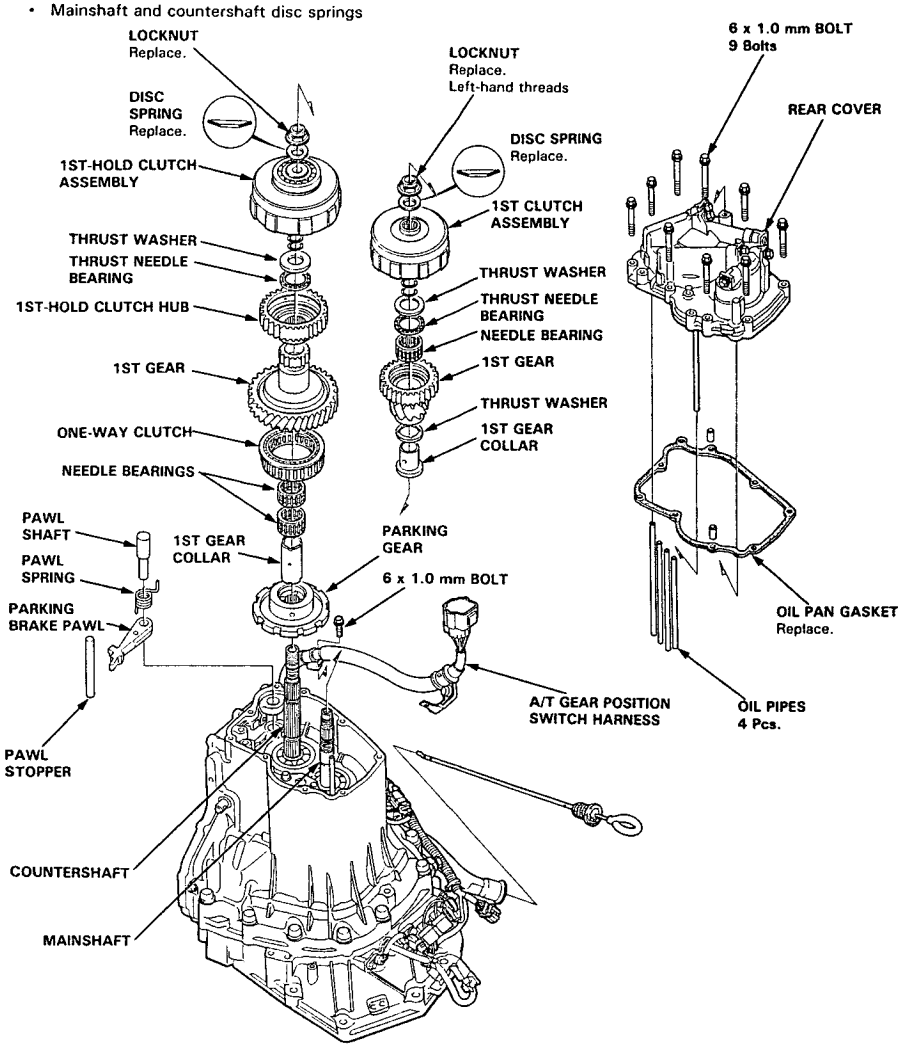

1. Remove the bolt securing the A/T gear position switch harness clamp.
2. Remove the nine bolts securing the rear cover then remove the rear cover.
3. Remove the four oil pipes from the transmission housing.
4. Slip the special tool on the mainshaft.

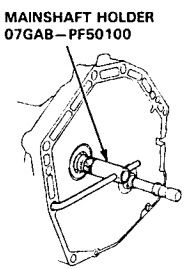

5. Engage the parking brake pawl with the parking gear.
6. Cut the lock tabs of each shaft locknut using a chisel as shown. Then remove the locknuts and disc springs from each shaft.

CAUTION: Always wear the safety glasses.

NOTE:
- Mainshaft locknut has left-hand threads.
- Keep all of the chiseled particles out of the transmission.

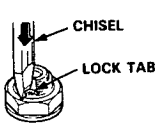

7. Remove the special tool from the mainshaft after removing the locknuts.
8. Remove the 1st-hold clutch assembly, thrust washer, thrust needle bearing and 1st-hold clutch hub from the countershaft.
9. Remove the 1st clutch assembly, thrust washer, thrust needle bearing and 1st gear from the mainshaft.
10. Remove the 1st gear, one-way clutch, needle bearings, 1st gear collar and parking gear from the countershaft.
11. Remove the thrust washer and 1st gear collar from the mainshaft.
12. Remove the parking brake pawl, shaft, spring, and stopper from the transmission housing.

Transmission Housing

Removal

NOTE:
- Clean all parts thoroughly in solvent or carburetor cleaner and dry with compressed air.
- Blow out all passages.
- When removing the transmission housing, replace the following:
  - O-rings
  - Transmission housing gasket

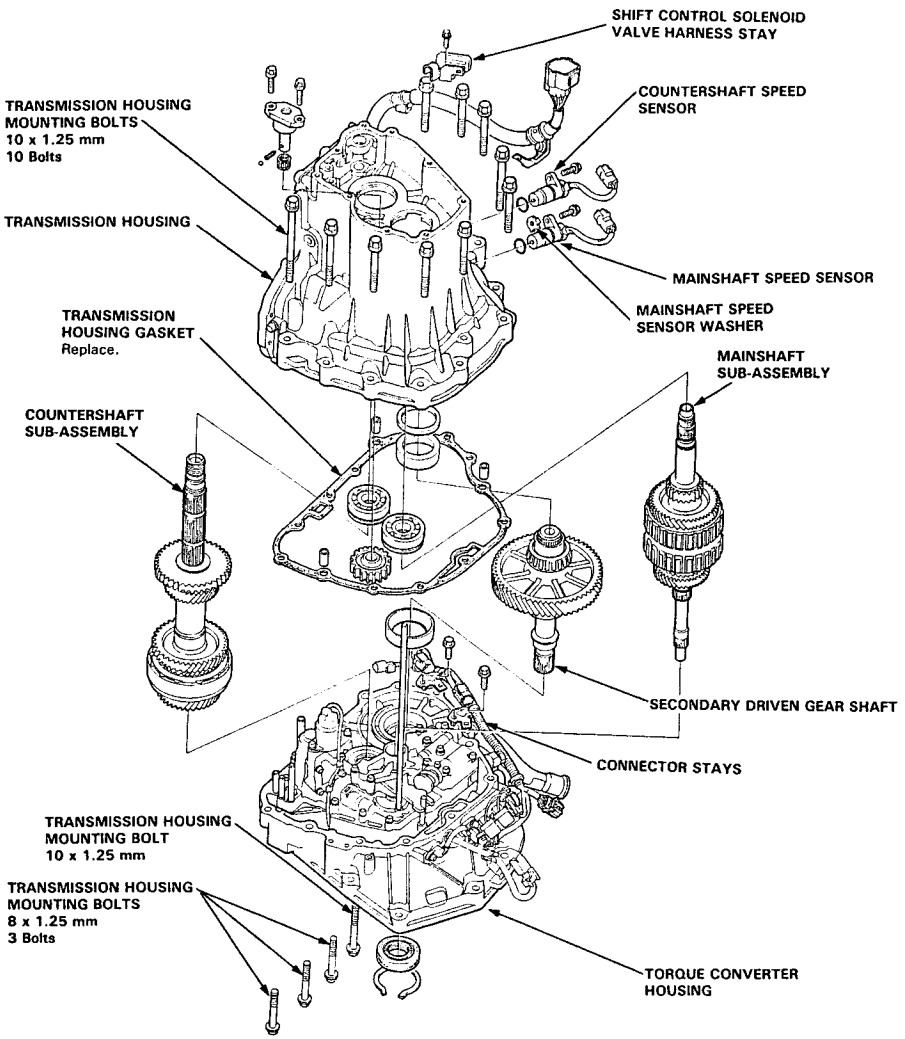

1. Remove the bolts securing the shift control solenoid vavle harness stay, mainshaft speed sensor connector stay and countershaft speed sensor connector stay.

2. Remove the countershaft speed sensor and mainshaft speed sensor with mainshaft speed sensor washer from the transmission housing.

3. Remove the ten bolts securing the transmission housing, and remove the 10 mm bolt and three 8 mm bolts securing the transmission housing from the torque converter housing side.

4. Install the special tool on the transmission housing, then remove the transmission housing as shown.

   CAUTION: Make sure that the mainshaft and countershaft speed sensors have been removed from the transmission housing before removing the transmission housing from the torque converter housing.

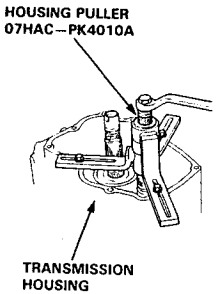

5. Remove the mainshaft sub-assembly and countershaft sub-assembly together.

   NOTE: When removing the shafts, take care to prevent damage to the regulator valve body.

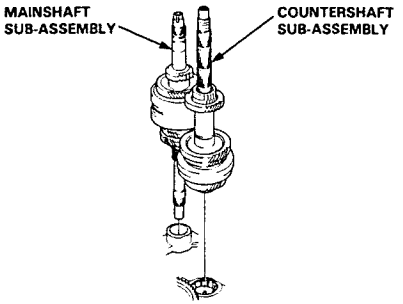

6. Remove the secondary driven gear shaft from the torque converter housing.

Torque Converter Housing/Valve Body

Removal

NOTE:
- Clean all parts thoroughly in solvent or carburetor cleaner and dry with compressed air.
- Blow out all passages.
- When removing the valve bodies, replace the following:
  - O-rings
  - Filters

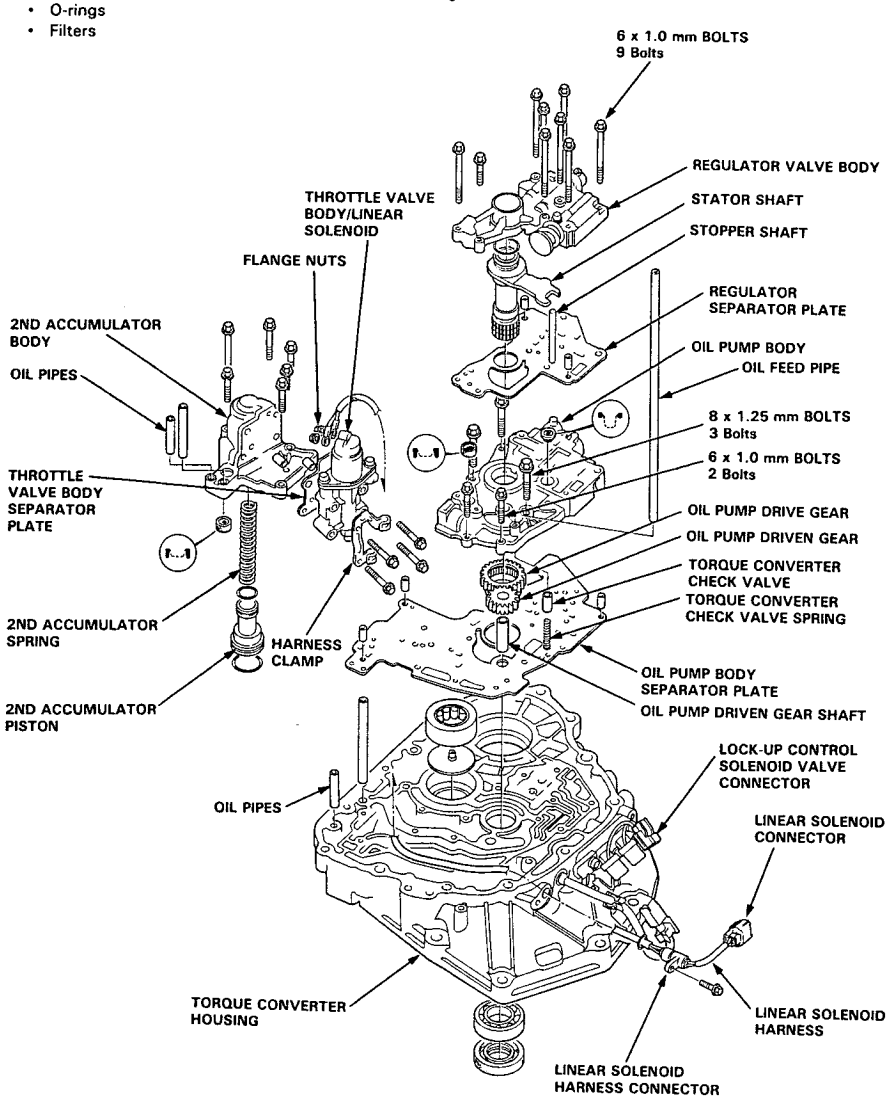

1. Remove the oil feed pipe from the oil pump body and two oil pipes from the torque converter housing.
2. Remove the two flange nuts securing the linear solenoid harness then disconnect the harness from the linear solenoid and harness clamp.
3. Remove the nine bolts securing the regulator valve body then remove the regulator valve body.
4. Remove the stopper shaft and stator shaft.
5. Remove the regulator separator plate with two dowel pins.
6. Remove the six bolts securing the 2nd accumulator body then remove the 2nd accumulator body and throttle valve body/linear solenoid as an assembly.
7. Remove the three 8 mm bolts and two 6 mm bolts securing the oil pump body then remove the oil pump body.
8. Remove the oil pump gears and oil pump driven gear shaft.
9. Remove the torque converter check valve and spring.
10. Remove the oil pump body separator plate with three dowel pins.
11. Remove the bolt securing the linear solenoid harness connector then remove the linear solenoid harness from the torque converter housing.
12. Disconnect the lock-up control solenoid valve connector then remove the transmission sub-harness.

Lower Valve Body Assembly

Disassembly/Reassembly

NOTE:
- Clean all parts thoroughly in solvent or carburetor cleaner and dry with compressed air.
- Blow out all passages.
- Coat all parts with ATF before reassembly.
- Replace the filters.
- Install the filters in the direction shown.

CAUTION: Do not use a magnet to remove the check balls; it may magnetize the balls.

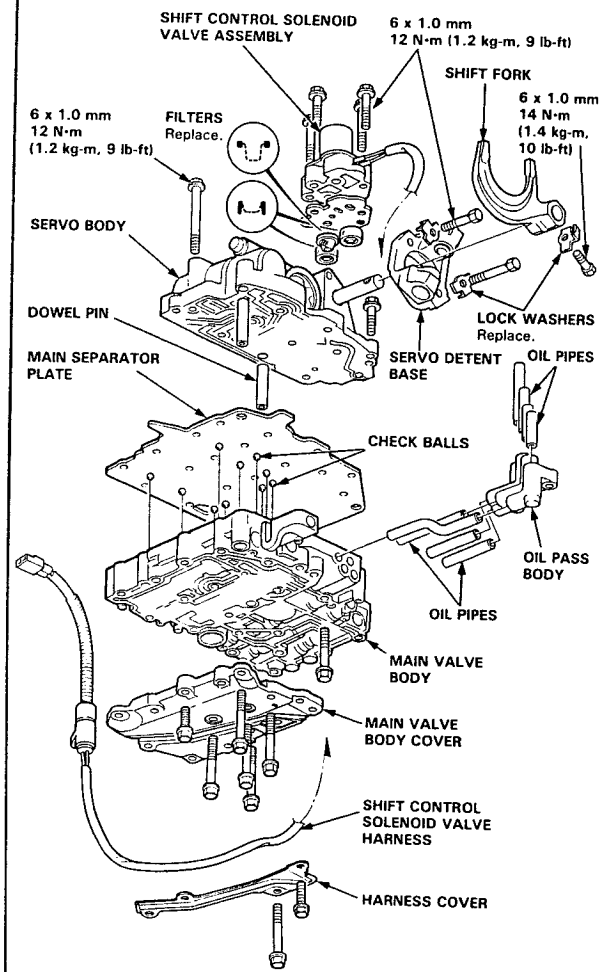

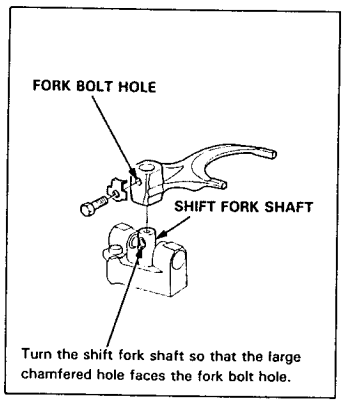

6 mm BOLT LENGTH

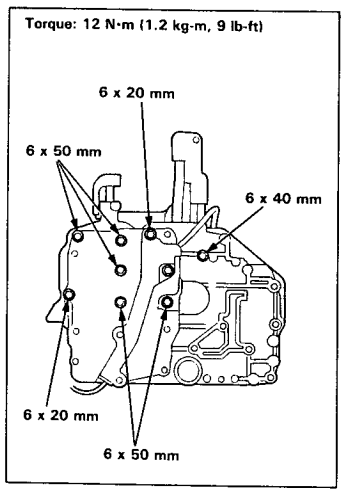

Valve Body

Repair

NOTE: This repair is only necessary if one or more of the valves in a valve body do not slide smoothly in their bores. You may use this procedure to free the valves in the valve bodies.

1. Soak a sheet of #600 abrasive paper in ATF for about 30 minutes.
2. Carefully tap the valve body so the sticking valve drops out of its bore.

   CAUTION: It may be necessary to use a small screwdriver to pry the valve free. Be careful not to scratch the bore with the screwdriver.
3. Inspect the valve for any scuff marks. Use the ATF-soaked #600 paper to polish off any burrs that are on the valve, then wash the valve in solvent and dry it with compressed air.
4. Roll up half a sheet of ATF-soaked paper and insert it in the valve bore of the sticking valve.
   Twist the paper slightly, so that it unrolls and fits the bore tightly, then polish the bore by twisting the paper as you push it in and out.

   CAUTION: The valve body is aluminum and doesn't require much polishing to remove any burrs.

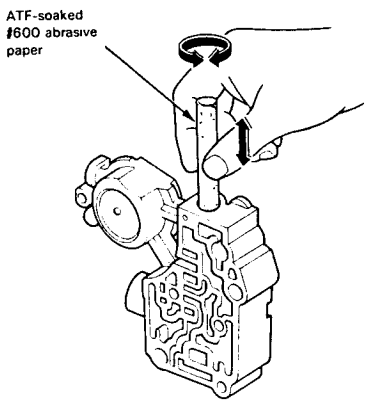

5. Remove the #600 paper and thoroughly wash the entire valve body in solvent, then dry with compressed air.
6. Coat the valve with ATF then drop it into its bore. It should drop to the bottom of the bore under its own weight. If not, repeat step 4, then retest.

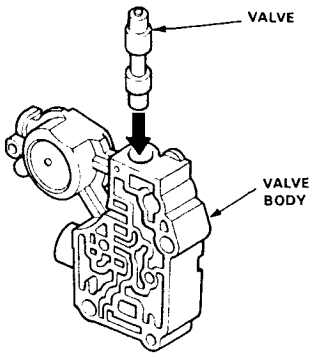

7. Remove the valve and thoroughly clean it and the valve body with solvent. Dry all parts with compressed air, then reassemble using ATF as a lubricant.

Valve

Assembly

NOTE: Coat all parts with ATF before assembly.

- Install the valve, valve spring and cap in the valve body and secure with the roller.

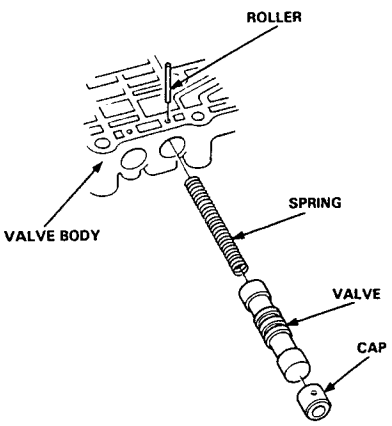

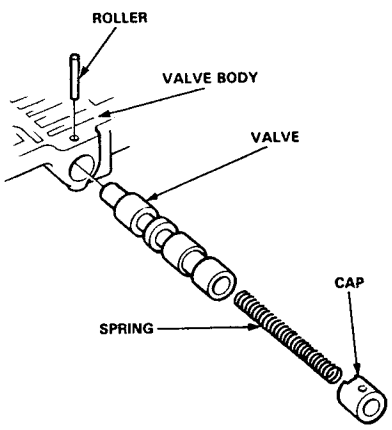

- Set the spring in the valve and install it in the valve body. Push the spring in with a screwdriver, then install the spring seat.

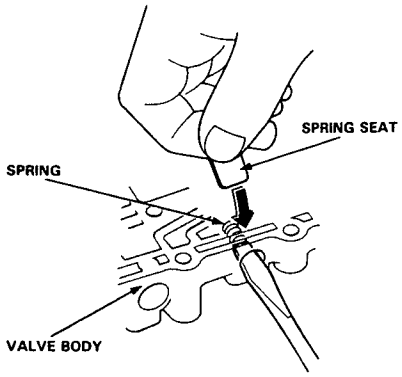

Valve Caps

Description

- Caps with one projected tip and one flat end are installed with the flat end toward the inside of the valve body.
- Caps with a projected tip on each end are installed with the smaller tip toward the inside of the valve body. The small tip is a spring guide.

Toward outside of valve body.

Toward inside of valve body.

- Caps with one projected tip and hollow end are installed with the tip toward the inside of the valve body. The tip is a spring guide.

Toward outside of valve body.

Toward inside of valve body.

- Caps with hollow ends are installed with the hollow end away from the inside of the valve body.
- Caps with notched ends are installed with the notch toward the inside of the valve body.
- Caps with flat ends and a hole through the center are installed with the smaller hole toward the inside of the valve body.

Toward outside of valve body.

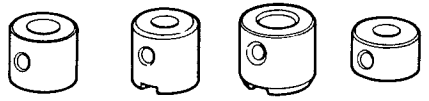

Toward inside of valve body.

Main Valve Body

Disassembly/Inspection/Reassembly

NOTE:
- Clean all parts thoroughly in solvent or carburetor cleaner and dry with compressed air.
- Blow out all passages.
- Replace valve body as an assembly if any parts are worn or damaged.
- Check all valves for free movement. If any fail to slide freely, see Valve Body Repair on page 14-123.
- Coat all parts with ATF before reassembly.

CAUTION: Do not use a magnet to remove the check balls; it may magnetize the balls.

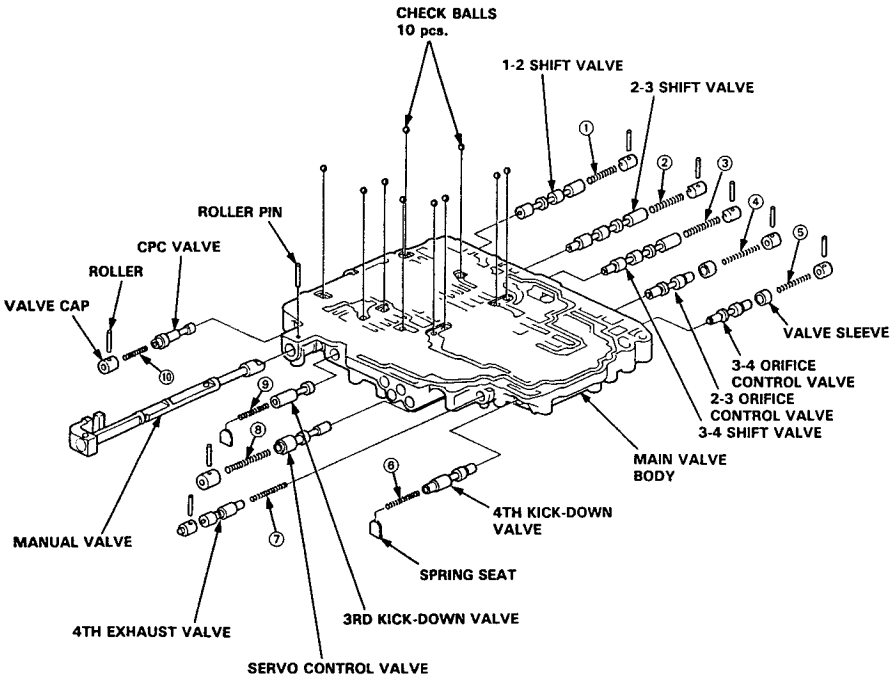

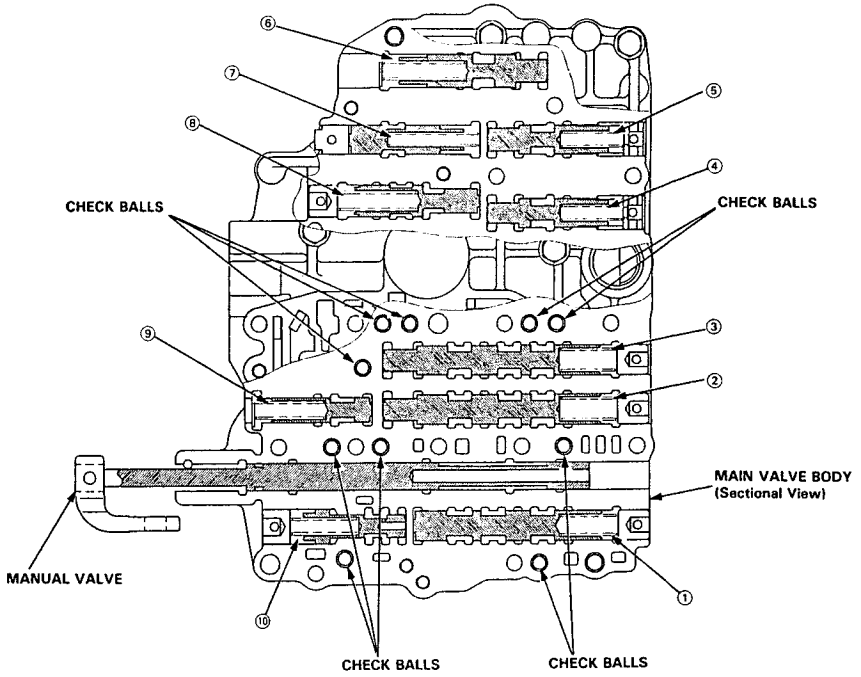

SPRING SPECIFICATIONS

Unit: mm (in)

No.	Spring	Standard (New)			
		Wire Dia.	O.D.	Free Length	No. of Coils
①	1-2 shift valve spring	0.9 (0.035)	8.6 (0.339)	40.4 (1.591)	14.5
②	2-3 shift valve spring	0.9 (0.035)	9.6 (0.378)	43.0 (1.693)	12.1
③	3-4 shift valve spring	0.9 (0.035)	9.6 (0.378)	43.0 (1.693)	12.1
④	2-3 orifice control valve spring	0.7 (0.028)	6.6 (0.260)	39.1 (1.539)	22.0
⑤	3-4 orifice control valve spring	0.7 (0.028)	6.6 (0.260)	34.8 (1.370)	22.0
⑥	4th kick-down valve spring	1.0 (0.039)	7.6 (0.299)	48.2 (1.898)	22.2
⑦	4th exhaust valve spring	0.6 (0.024)	5.6 (0.220)	49.1 (1.933)	21.0
⑧	Servo control valve spring	1.0 (0.039)	8.1 (0.319)	52.1 (2.051)	20.8
⑨	3rd kick-down valve spring	1.0 (0.039)	7.4 (0.291)	38.6 (1.520)	16.0
⑩	CPC valve spring	1.0 (0.039)	6.8 (0.268)	36.1 (1.421)	17.8

Servo Body

Disassembly/Inspection/Reassembly

NOTE:
- Clean all parts thoroughly in solvent or carburetor cleaner and dry with compressed air.
- Blow out all passages.
- Replace valve body as an assembly if any parts are worn or damaged.
- Coat all parts with ATF before reassembly.
- Replace the O-rings and filters.
- Install the filters in the direction shown.

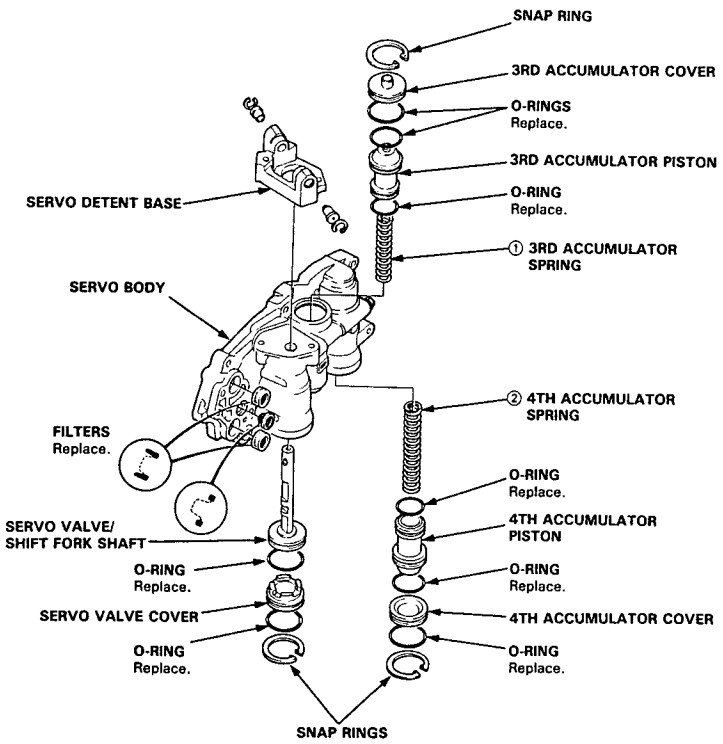

SPRING SPECIFICATIONS

Unit: mm (in)

No.	Spring	Standard (New)			
		Wire Dia.	O.D.	Free Length	No. of Coils
①	3rd accumulator spring	3.2 (0.126)	20.5 (0.807)	89.0 (3.504)	12.6
②	4th accumulator spring	3.3 (0.130)	20.5 (0.807)	74.1 (2.917)	11.2

Regulator Valve Body

Disassembly/Inspection/Reassembly

NOTE:
- Clean all parts thoroughly in solvent or carburetor cleaner and dry with compressed air.
- Blow out all passages.
- Replace valve body as an assembly if any parts are worn or damaged.
- Check all valves for free movement. If any fail to slide freely, see Valve Body Repair on page 14-123.

1. Hold the regulator spring cap in place while removing the lock bolt. Once the bolt is removed, release the spring cap slowly.

   CAUTION: The regulator spring cap can pop out when the lock bolt is removed.

2. Reassembly is in the reverse order of disassembly.

   NOTE:
   - Coat all parts with ATF.
   - Align the hole in the regulator spring cap with the hole in the valve body, press the regulator spring cap into the body and tighten the lock bolt.

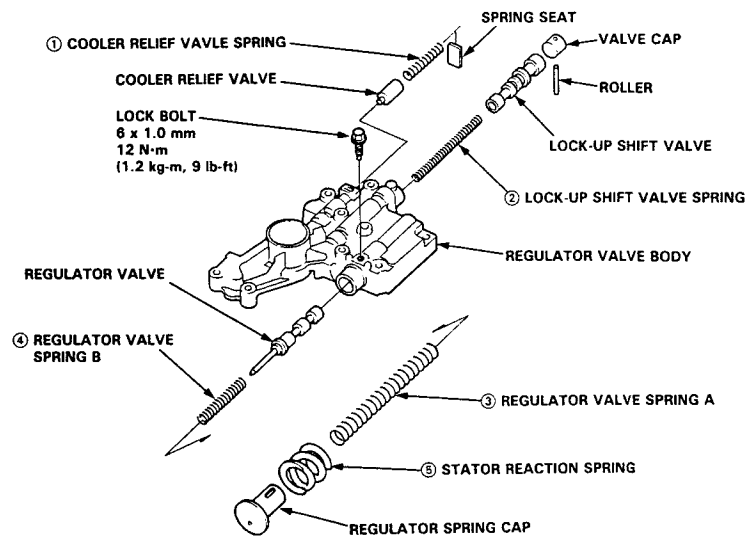

SPRING SPECIFICATIONS

Unit: mm (in)

No.	Spring	Standard (New)			
		Wire Dia.	O.D.	Free Length	No. of Coils
①	Cooler relief valve spring	1.1 (0.043)	8.4 (0.331)	46.8 (1.843)	17.0
②	Lock-up shift valve spring	0.9 (0.035)	7.6 (0.299)	73.7 (2.902)	32.0
③	Regulator valve spring A	1.8 (0.071)	14.7 (0.579)	88.6 (3.488)	16.5
④	Regulator valve spring B	1.8 (0.071)	9.6 (0.378)	44.0 (1.732)	7.5
⑤	Stator reaction spring	6.0 (0.236)	38.4 (1.512)	30.3 (1.193)	2.0

Oil Pump Body

Disassembly/Inspection/Reassembly

NOTE:
- Clean all parts thoroughly in solvent or carburetor cleaner and dry with compressed air.
- Blow out all passages.
- Replace valve body as an assembly if any parts are worn or damaged.
- Check all valves for free movement. If any fail to slide freely, see Valve Body Repair on page 14-123.
- Coat all parts with ATF before reassembly.
- Install the filters in the direction shown.

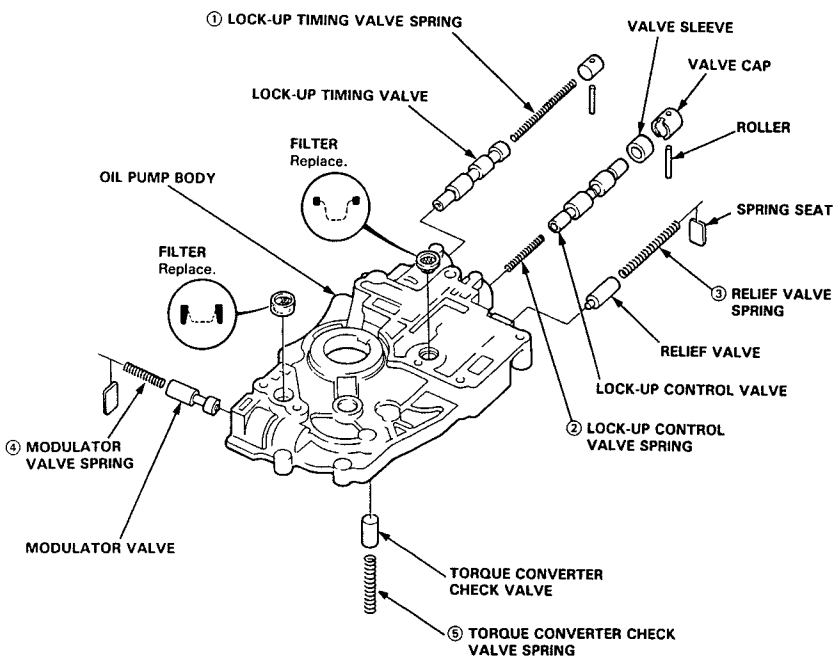

SPRING SPECIFICATIONS

Unit: mm (in)

No.	Spring	Standard (New)			
		Wire Dia.	O.D.	Free Length	No. of Coils
①	Lock-up timing valve spring	0.8 (0.031)	6.6 (0.260)	59.3 (2.335)	38.8
②	Lock-up control valve spring	0.7 (0.028)	6.6 (0.260)	38.0 (1.496)	14.1
③	Relief valve spring	1.1 (0.043)	8.4 (0.331)	41.8 (1.646)	15.7
④	Modulator valve spring	1.4 (0.055)	9.4 (0.370)	32.4 (1.276)	10.5
⑤	Torque converter check valve spring	1.1 (0.043)	8.4 (0.331)	41.8 (1.646)	15.7

Oil Pump

Inspection

1. Install the oil pump gears and oil pump driven gear shaft in the oil pump body.

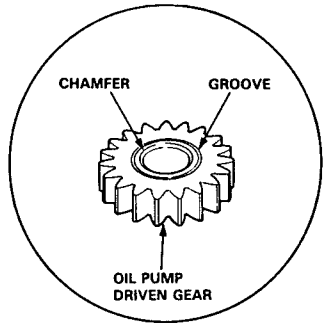

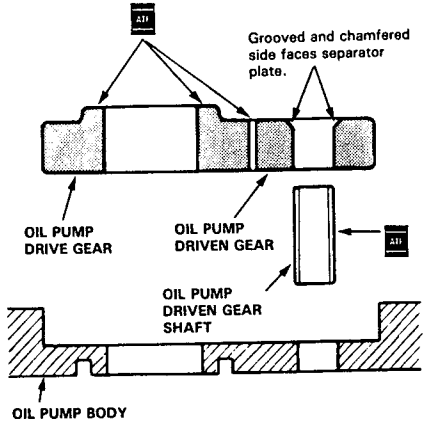

2. Measure the side clearance of the oil pump drive and driven gears.

   Oil Pump Gears Side (Radial) Clearance:
   Standard (New): Drive gear
   0.210–0.265 mm
   (0.0083–0.0104 in)
   Driven gear
   0.07–0.125 mm
   (0.0028–0.0049 in)

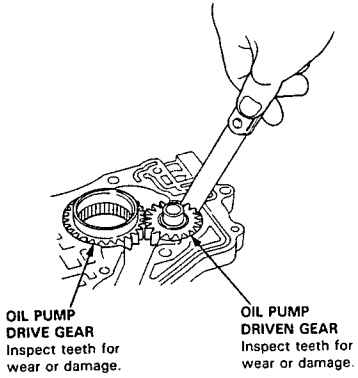

3. Remove the oil pump driven gear shaft.

4. Measure the thrust clearance of the oil pump driven gears-to-oil pump body.

   Oil Pump Drive/Driven Gears thrust (Axial) Clearance:
   Standard (New): 0.03–0.05 mm (0.001–0.002 in)
   Service Limit: 0.07 mm (0.0028 in)

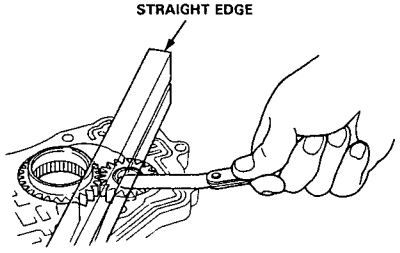

2nd Accumulator Body/Throttle Valve Body

Disassembly/Inspection/Reassembly

NOTE:
- Clean all parts thoroughly in solvent or carburetor cleaner and dry with compressed air.
- Blow out all passages.
- Replace valve body as an assembly if any parts are worn or damaged.
- Coat all parts with ATF before reassembly.
- Replace the O-rings and filter.
- Install the filter in the direction shown.

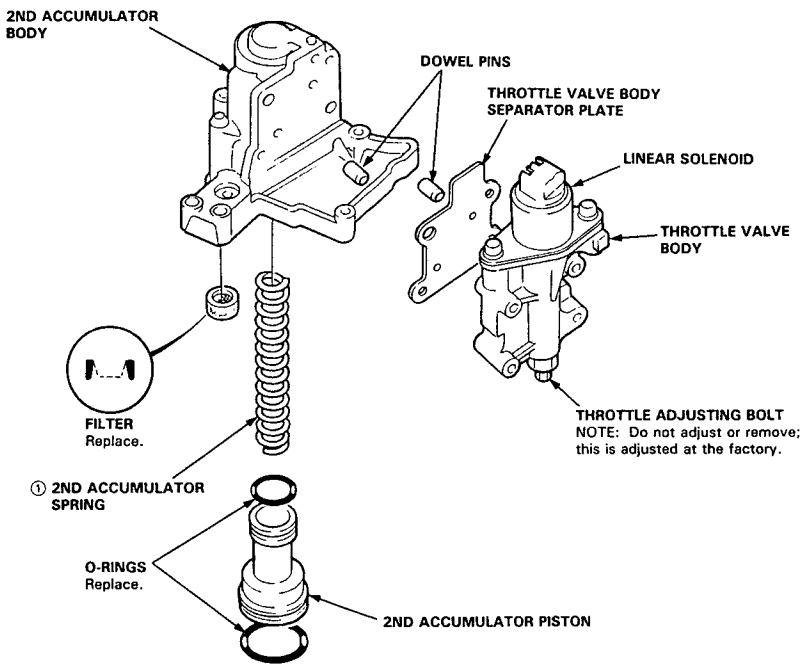

SPRING SPECIFICATIONS

Unit: mm (in)

No.	Spring	Standard (New)			
		Wire Dia.	O.D.	Free Length	No. of Coils
①	2nd accumulator spring	3.0 (0.118)	18.7 (0.736)	88.1 (3.468)	14.2

Throttle Valve Body/Linear Solenoid

Test

1. Connect the linear solenoid harness to the linear solenoid terminals.
2. Connect the A (RED: +) terminal of the linear solenoid to the positive battery terminal and the B (WHT: −) terminal to the negative battery terminal. Check that the throttle valve moves.
3. Repeat the above steps 1 and 2.

   NOTE: You can see the movement of the throttle valve through the oil passage in the mounting surface of the throttle valve body.

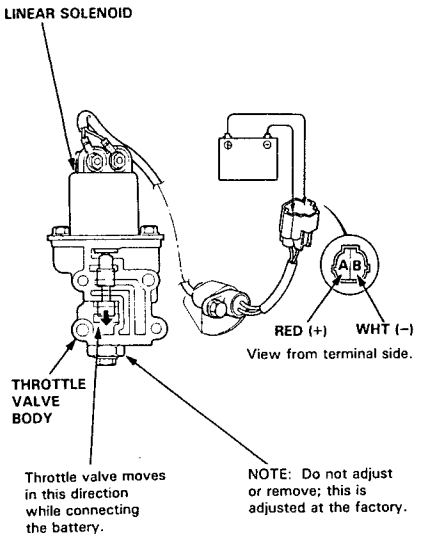

4. If the throttle valve binds, or moves sluggishly, or the linear solenoid does not operate, replace the throttle valve body/linear solenoid as an assembly.
5. If the linear solenoid does not operate, disconnect the linear solenoid harness from the linear solenoid assembly. Connect the battery directly to the linear solenoid.
6. If the linear solenoid operates after connecting the battery, and the throttle valve movement is OK, replace the linear solenoid harness.

Replacement

NOTE: Throttle valve body/linear solenoid must be replaced as an assembly.

1. Check the throttle valve body passages for dust or dirt, and replace as an assembly, if necessary.
2. Clean the mounting surface and oil passages of the throttle valve body.
3. Assemble the throttle valve body/linear solenoid to the 2nd accumulator body.

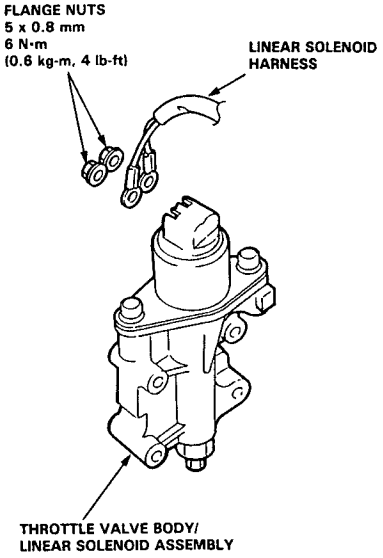

1st Accumulator/1st-hold Accumulator

Disassembly/Inspection/Reassembly

NOTE:
- Clean all parts thoroughly in solvent or carburetor cleaner and dry with compressed air.
- Blow out all passages.
- Coat all parts with ATF before reassembly.
- Replace the O-rings and sealing washer.

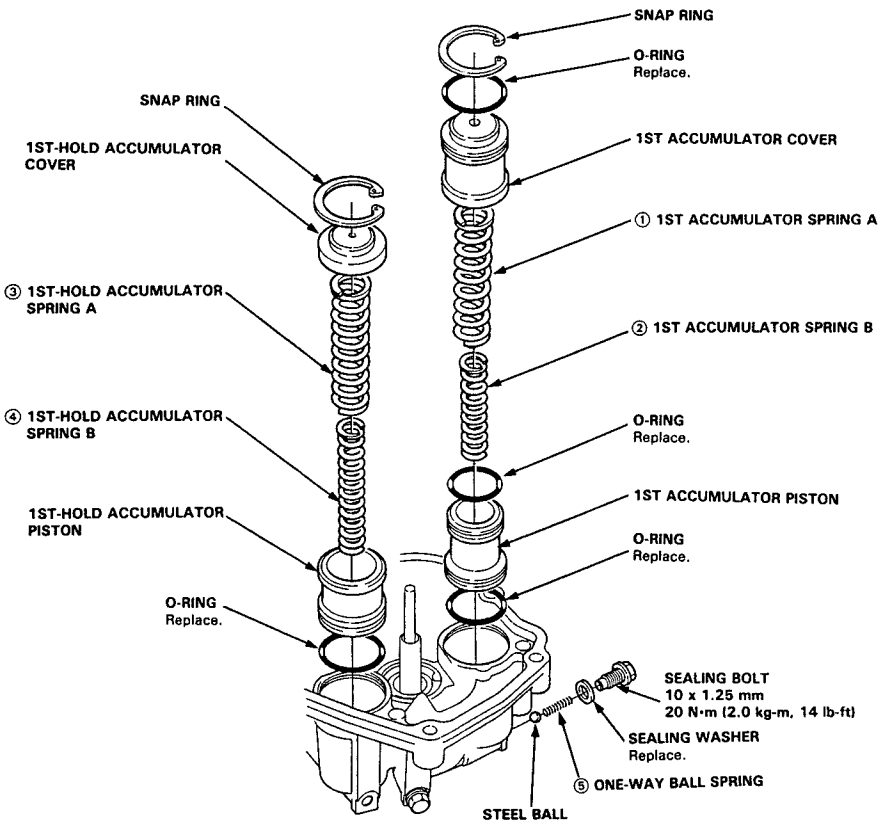

SPRING SPECIFICATIONS

Unit: mm (in)

No.	Spring	Standard (New)			
		Wire Dia.	O.D.	Free Length	No. of Coils
①	1st accumulator spring A	2.2 (0.087)	17.2 (0.677)	88.6 (3.488)	15.0
②	1st accumulator spring B	1.9 (0.075)	9.8 (0.386)	51.5 (2.028)	8.3
③	1st-hold accumulator spring A	3.5 (0.138)	21.6 (0.850)	55.9 (2.201)	7.7
④	1st-hold accumulator spring B	2.3 (0.091)	12.8 (0.504)	53.4 (2.102)	12.6
⑤	One-way ball spring	0.29 (0.011)	4.0 (0.157)	14.0 (0.551)	13.0

Mainshaft

Disassembly/Inspection/Reassembly

NOTE:
- Lubricate all parts with ATF during reassembly.
- Install the thrust needle bearings with unrolled edge of bearing retainer facing washer.
- Inspect the thrust needle bearings and the needle bearings for galling and rough movement.
- Before installing the O-rings, wrap the shaft splines with tape to prevent damage to the O-rings.
- Locknut has left-hand threads.

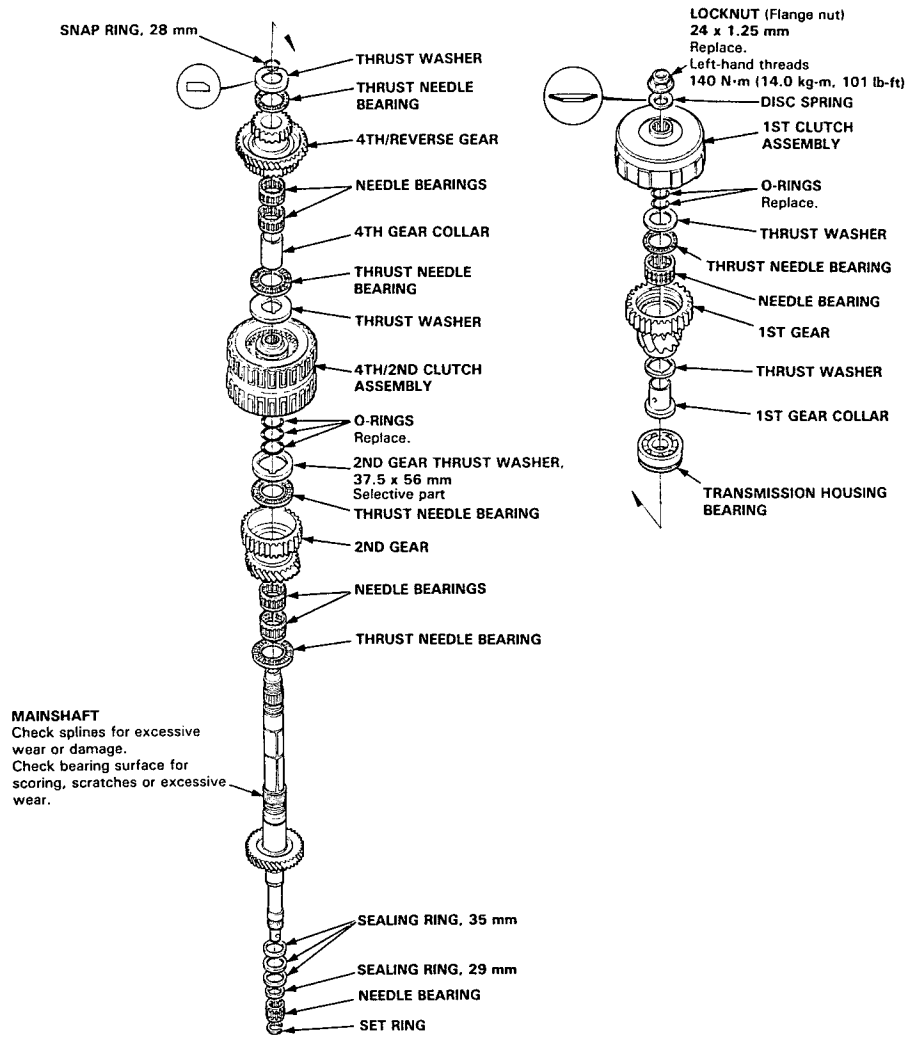

Mainshaft

Inspection

- Clearance Measurements

NOTE: Lubricate all parts with ATF during assembly.

1. Remove the mainshaft bearing from the transmission housing (see page 14-153).
2. Assemble the parts below on the mainshaft.

NOTE: Do not install the O-rings during inspection.

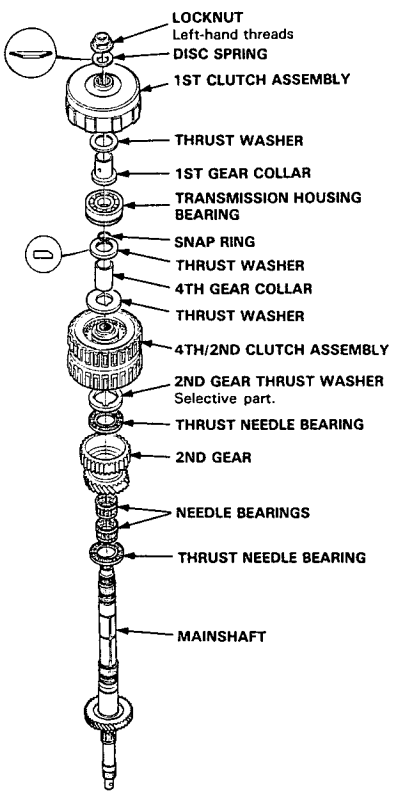

3. Torque the mainshaft locknut to 30 N·m (3.0 kg-m, 22 lb-ft).

NOTE: Mainshaft locknut has left-hand threads.

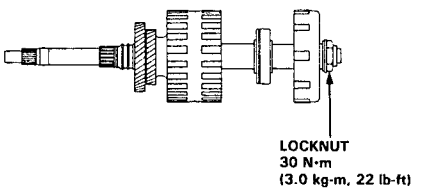

4. Move the 4th/2nd clutch assembly to check the axial clearances.
5. Attach the dial indicator to the mainshaft 2nd gear as shown.

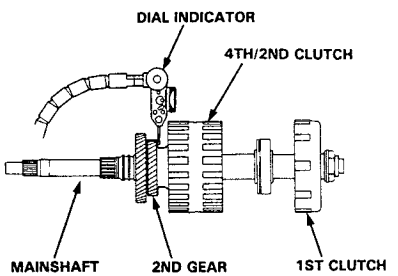

6. Measure the 2nd gear axial clearance while pushing the 4th/2nd clutch toward the 1st clutch.

STANDARD: 0.07–0.15 mm (0.003–0.006 in)

NOTE: Take measurements in at least three places and take the average as the actual clearance.

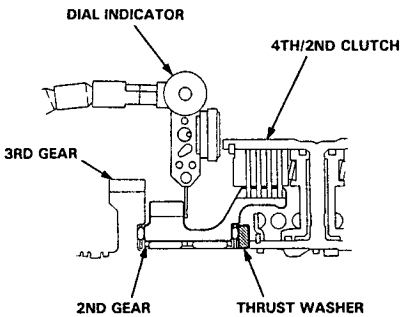

7. If the clearance is out of tolerance, remove the 2nd gear thrust washer and measure the thickness.

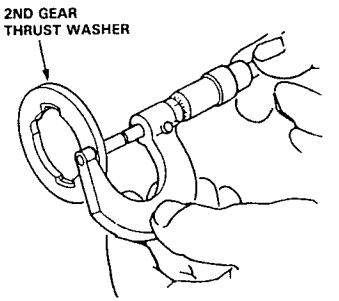

8. Select and install a new 2nd gear thrust washer then recheck.

2ND GEAR THRUST WASHER, 37.5 x 56 mm

No.	Part Number	Thickness
1	90441-PW4-000	4.00 mm (0.157 in)
2	90442-PW4-000	4.05 mm (0.159 in)
3	90443-PW4-000	4.10 mm (0.161 in)
4	90444-PW4-000	4.15 mm (0.163 in)
5	90445-PW4-000	4.20 mm (0.165 in)
6	90446-PW4-000	4.25 mm (0.167 in)
7	90447-PW4-000	4.30 mm (0.169 in)
8	90448-PW4-000	4.35 mm (0.171 in)
9	90449-PW4-000	4.40 mm (0.173 in)
10	90450-PW4-000	4.45 mm (0.175 in)
11	90451-PW4-000	4.50 mm (0.177 in)

9. After replacing the 2nd gear thrust washer, make sure that the clearance is within tolerance.

Countershaft

Disassembly/Inspection/Reassembly

NOTE:
- Lubricate all parts with ATF during reassembly.
- Install the thrust needle bearings with unrolled edge of bearing retainer facing washer.
- Inspect the thrust needle bearings and the needle bearings for galling and rough movement.
- Before installing the O-rings, wrap the shaft splines with tape to prevent damage to the O-rings.

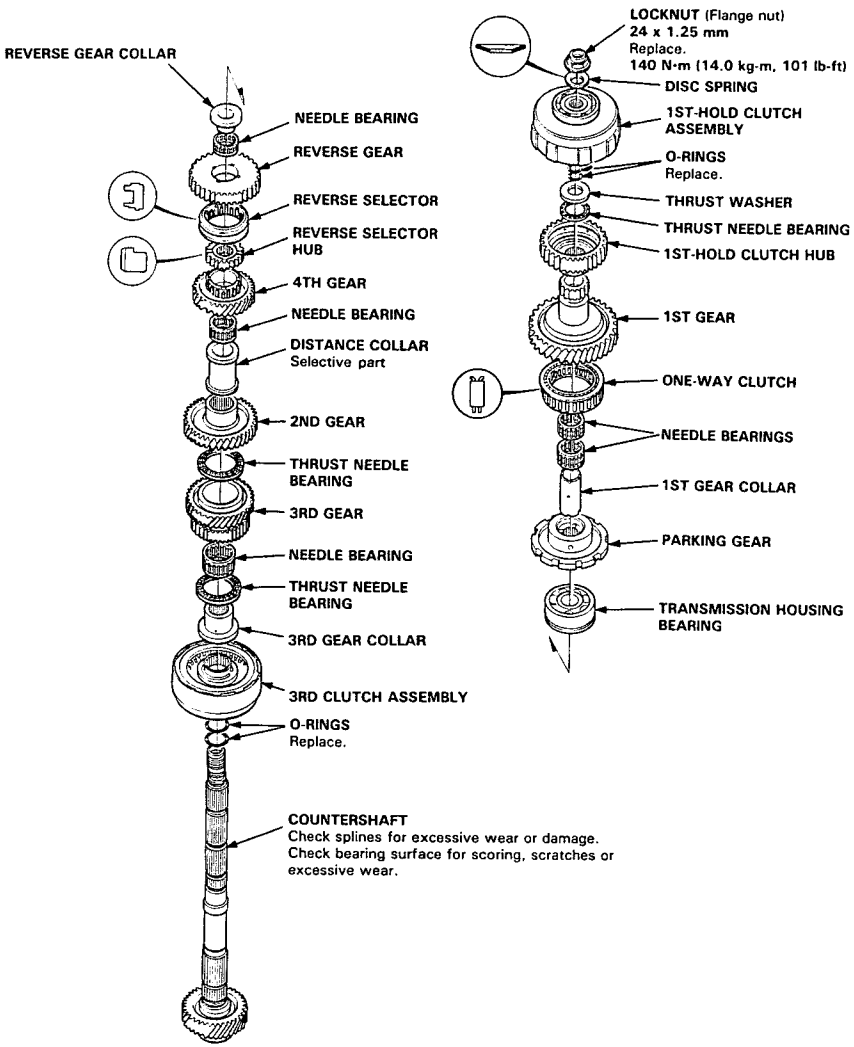

Inspection

- Clearance Measurement

NOTE: Lubricate all parts with ATF during assembly.

1. Remove the countershaft bearing from the transmission housing (see page 14-153).
2. Assemble the parts below on the countershaft.

NOTE: Do not install the O-rings during inspection.

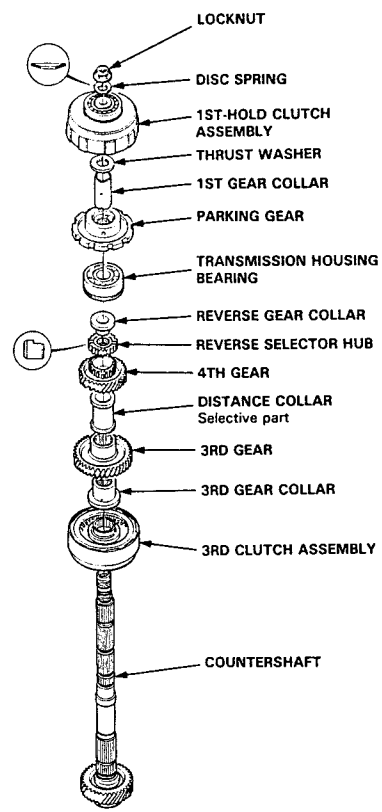

3. Torque the countershaft locknut to 30 N·m (3.0 kg-m, 22 lb-ft).

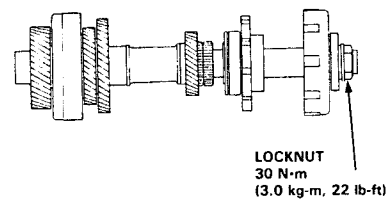

4. Hold the 4th gear against the distance collar. Measure the clearance between the 4th gear and the reverse selector hub with a feeler gauge.

NOTE: Take measurements in at least three places and take the average as the actual clearance.

STANDARD: 0.07–0.15 mm (0.003–0.006 in)

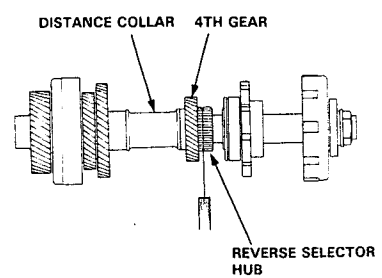

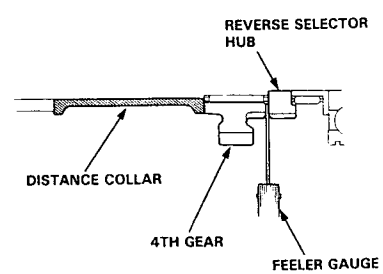

(cont'd)

Countershaft

Inspection (cont'd)

5. If the clearance is out of tolerance, remove the distance collar and measure the length.

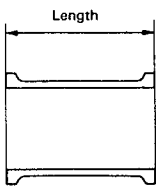

6. Select and install a new distance collar then recheck.

DISTANCE COLLAR 35 mm

No.	Part Number	Thickness
1	90501-PW7-000	65.65 mm (2.585 in)
2	90502-PW7-000	65.70 mm (2.587 in)
3	90503-PW7-000	65.75 mm (2.589 in)
4	90504-PW7-000	65.80 mm (2.591 in)
5	90505-PW7-000	65.85 mm (2.593 in)
6	90506-PW7-000	65.90 mm (2.594 in)
7	90507-PW7-000	65.95 mm (2.596 in)
8	90508-PW7-000	66.00 mm (2.598 in)
9	90509-PW7-000	66.05 mm (2.600 in)
10	90510-PW7-000	66.10 mm (2.602 in)

7. After replacing the distance collar, make sure that the clearance is within tolerance.

One-way Clutch/Parking Gear

Disassembly/Reassembly

1. Separate countershaft 1st gear from the parking gear by turning the parking gear in the direction shown.

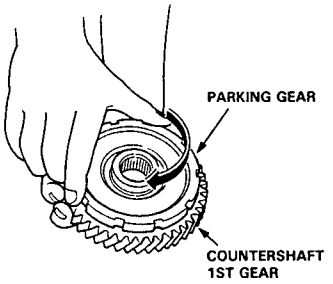

2. Remove the one-way clutch by prying it up with the end of a screwdriver.

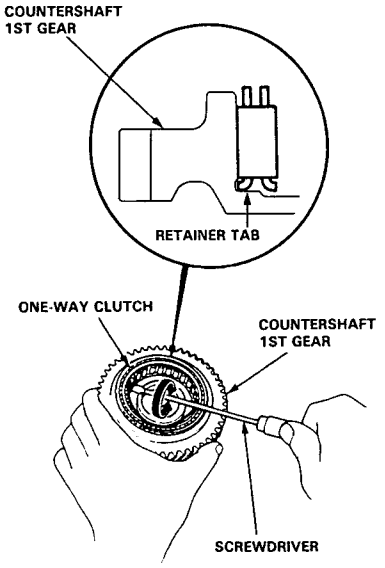

3. Hold countershaft 1st gear and turn the parking gear in the direction shown to be sure it turns freely.

Inspection

Inspect the parts as follows:

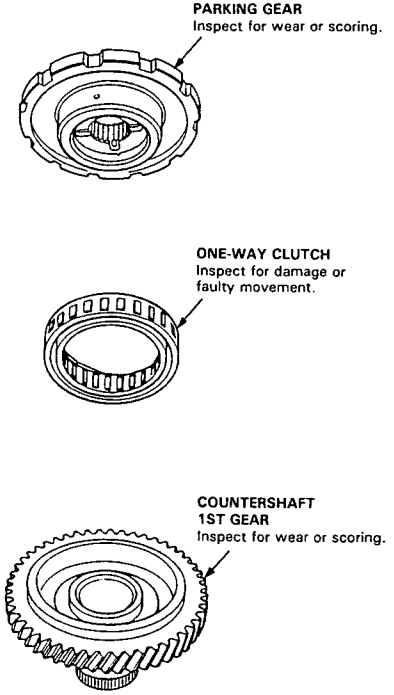

Clutch

Illustrated Index

1ST-HOLD CLUTCH

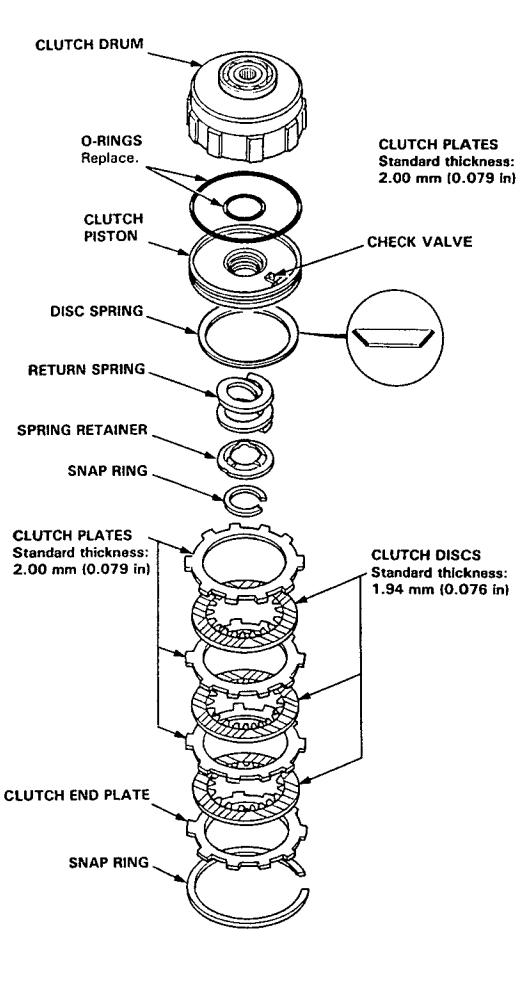

3RD CLUTCH

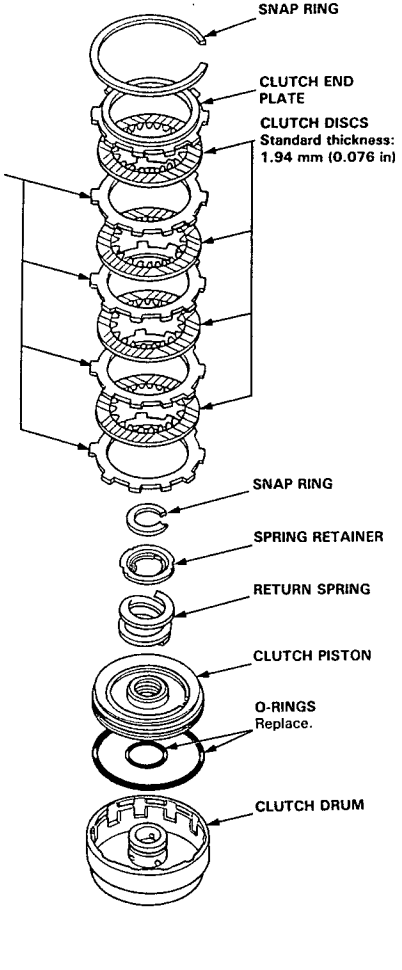

1ST CLUTCH

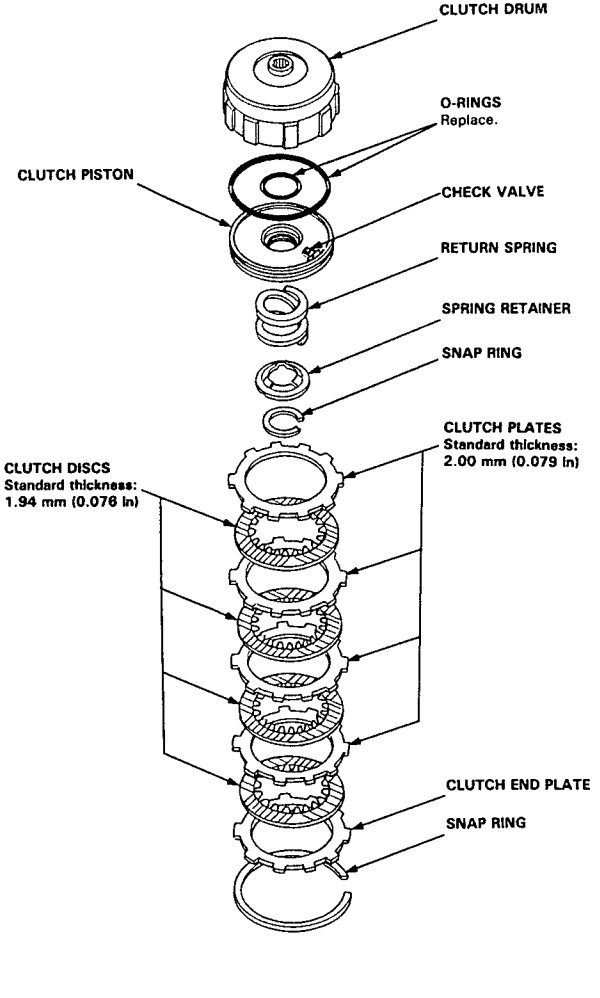

(cont'd)

Clutch

Illustrated Index (cont'd)

4TH/2ND CLUTCH

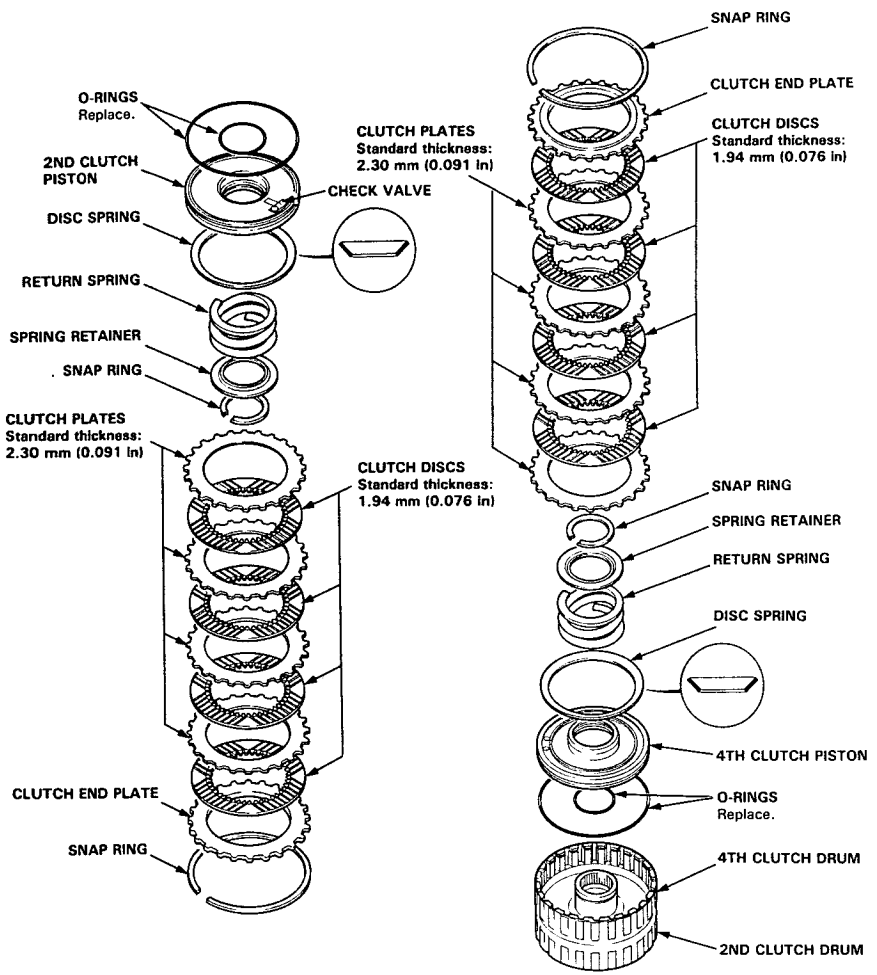

Disassembly

1. Remove the snap ring, then remove the clutch end plate, clutch discs and plates.

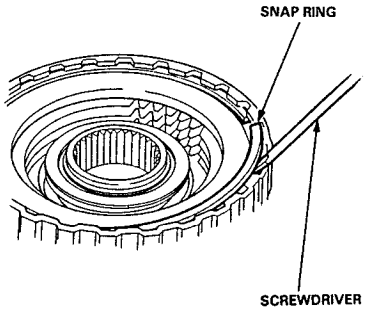

2. Remove the disc spring.

NOTE: For 1st-hold, 2nd and 4th clutches

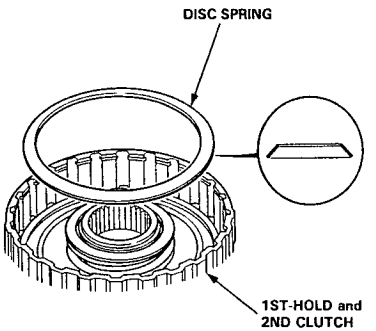

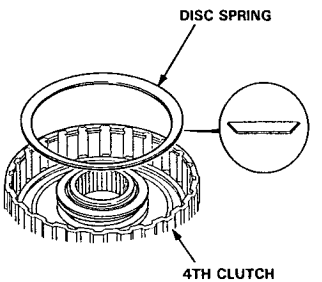

3. Install the special tools as shown.

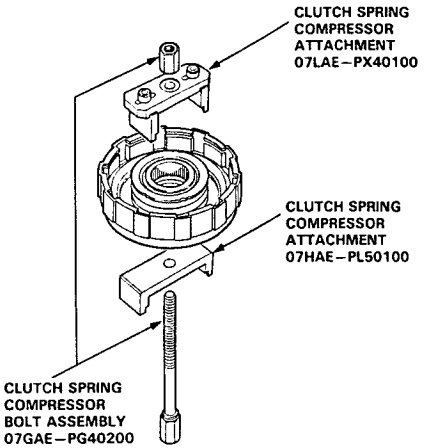

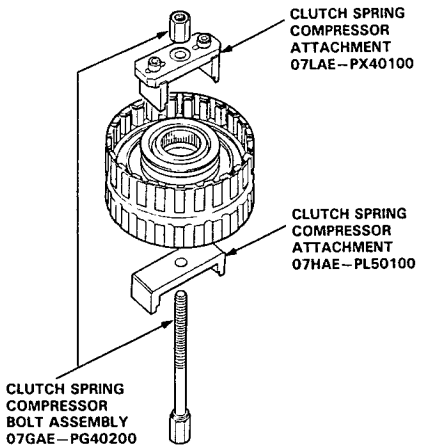

(cont'd)

Clutch

Disassembly (cont'd)

CAUTION: If either end of the compressor attachment is set over an area of the spring retainer which is unsupported by the return spring, the retainer may be damaged.

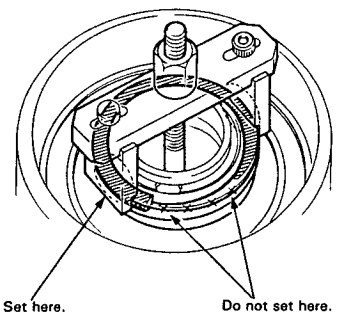

4. Compress the return spring.

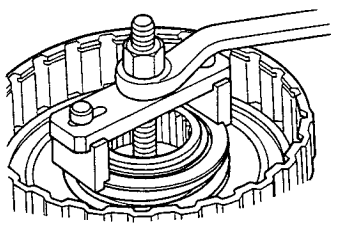

5. Remove the snap ring. Then remove the special tools, spring retainer and return spring.

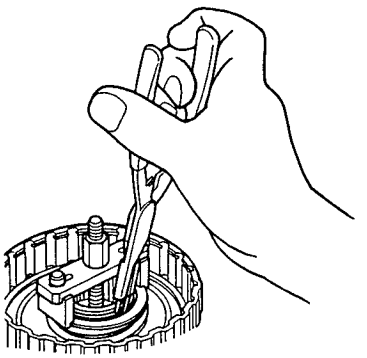

6. Wrap a shop towel around the clutch drum and apply air pressure to the oil passage to remove the piston. Place a finger tip on the other end while applying air pressure.

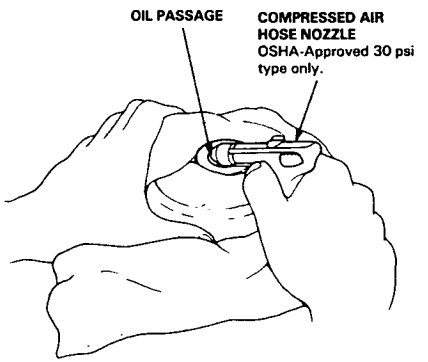

Reassembly

NOTE:
- Clean all parts thoroughly in solvent or carburetor cleaner, and dry with compressed air.
- Blow out all passages.
- Lubricate all parts with ATF before reassembly.

1. Inspect the check valve; if it's loose replace the piston.

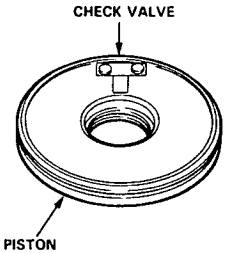

2. Install new O-rings on the clutch piston.

3. Be sure that the disc spring is securely staked.

   NOTE: For 1st and 3rd clutches.

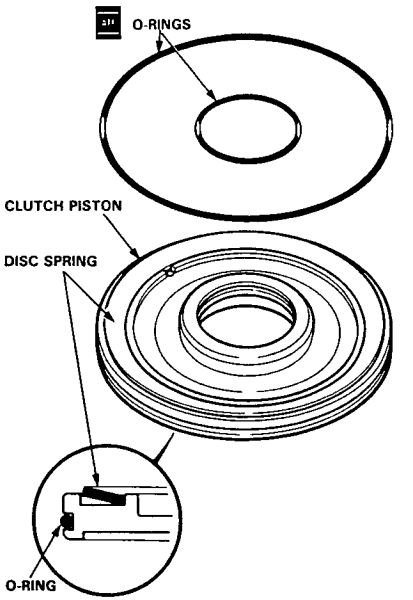

4. Install the piston in the clutch drum. Apply pressure and rotate to ensure proper seating.

   NOTE: Lubricate the piston O-rings with ATF before installing.

   CAUTION: Do not pinch O-ring by installing the piston with force.

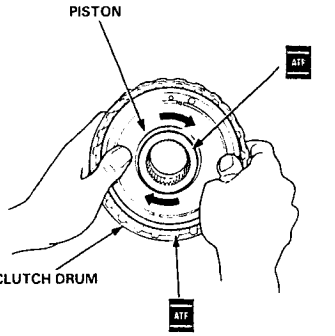

5. Install the return spring and spring retainer and position the snap ring on the spring retainer.

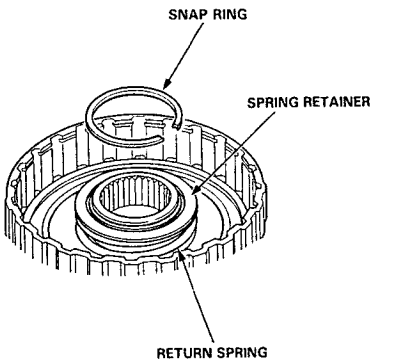

(cont'd)

Reassembly (cont'd)

6. Install the special tools as shown.

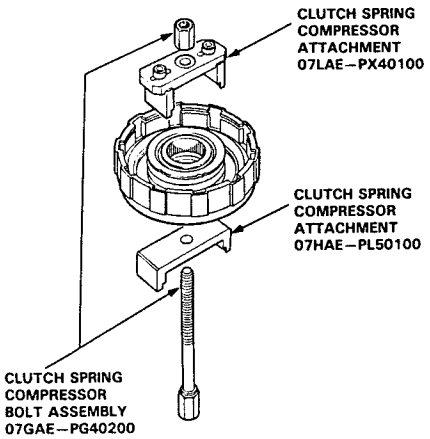

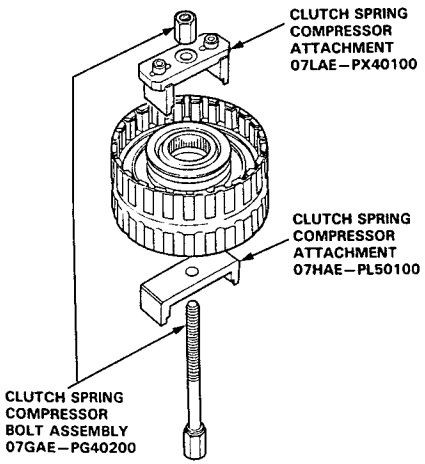

CAUTION: If either end of the compressor attachment is set over an area of the spring retainer which is unsupported by the return spring, the retainer may be damaged.

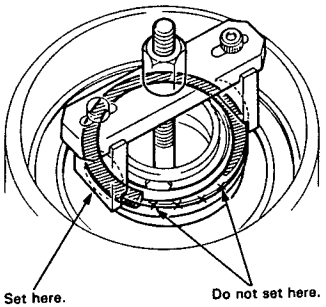

7. Compress the return spring.

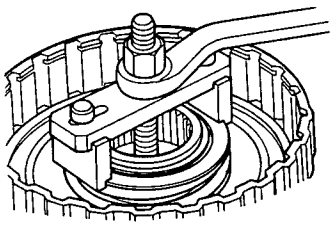

8. Install the snap ring.

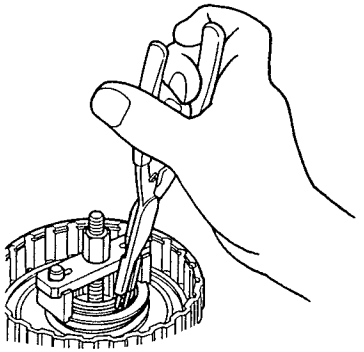

9. Remove the special tools.

10. Install the disc spring.

NOTE:
- For 1st-hold, 2nd and 4th clutches.
- Install the disc spring in the direction shown.

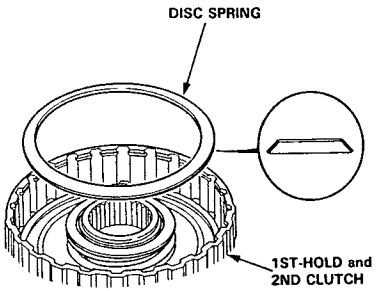

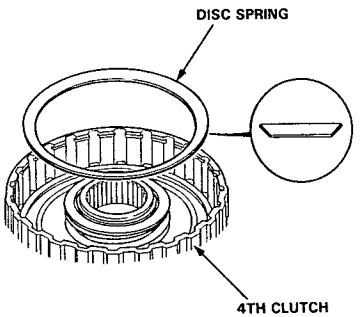

11. Soak the clutch discs thoroughly in ATF for a minimum of 30 minutes.

12. Starting with a clutch plate, alternately install the clutch plates and discs. Install the clutch end plate with flat side toward the disc.

NOTE: Before installing the plates and discs, make sure the inside of the clutch drum is free of dirt or other foreign matter.

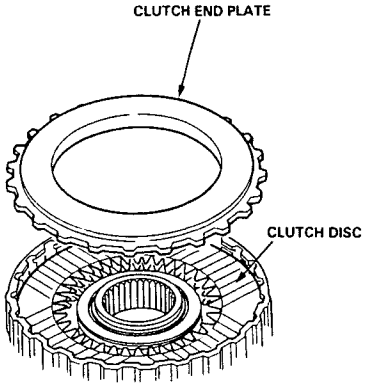

13. Install the snap ring.

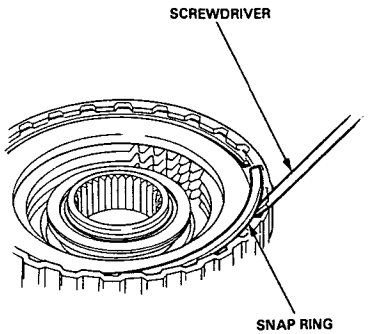

(cont'd)

Clutch

Reassembly (cont'd)

14. Measure the clearance between the clutch end plate and top disc with a dial indicator. Zero the dial indicator with the clutch end plate lowered and lift it up to the snap ring. The distance that the clutch end plate moves is the clearance between the clutch end plate and top disc.

    NOTE: Measure at three locations.

Clutch End Plate-to-Top Disc Clearance:

Clutch	Service Limit
1st	0.65–0.85 mm (0.026–0.033 in)
2nd	0.55–0.75 mm (0.022–0.030 in)
3rd	0.55–0.75 mm (0.022–0.030 in)
4th	0.55–0.75 mm (0.022–0.030 in)
1st-hold	0.80–1.00 mm (0.031–0.039 in)

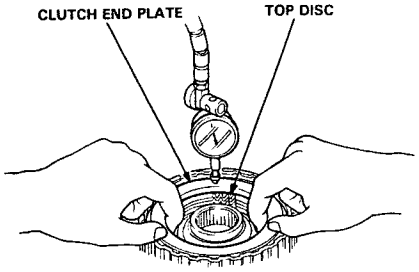

15. If the clearance is not within the service limits, select a new clutch end plate from the following table.

    NOTE: If the thickest clutch end plate is installed but the clearance is still over the standard, replace the clutch discs and clutch plates.

CLUTCH END PLATE

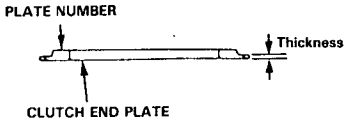

1ST and 1ST-HOLD CLUTCH

Plate No.	Part Number	Thickness mm (in)
1	22551–PF4–000	2.1 (0.083)
2	22552–PF4–000	2.2 (0.087)
3	22553–PF4–000	2.3 (0.091)
4	22554–PF4–000	2.4 (0.094)
5	22555–PF4–000	2.5 (0.098)
6	22556–PF4–000	2.6 (0.102)
7	22557–PF4–000	2.7 (0.106)
8	22558–PF4–000	2.8 (0.110)
9	22559–PF4–000	2.9 (0.114)
10	22560–PF4–000	3.0 (0.118)
11	22561–PF4–000	3.1 (0.122)
12	22562–PF4–000	3.2 (0.126)
13	22563–PF4–000	3.3 (0.130)
14	22564–PF4–000	3.4 (0.134)

2ND and 4TH CLUTCH

Plate No.	Part Number	Thickness mm (in)
1	22631–PR9–000	2.1 (0.083)
2	22632–PR9–000	2.2 (0.087)
3	22633–PR9–000	2.3 (0.091)
4	22634–PR9–000	2.4 (0.094)
5	22635–PR9–000	2.5 (0.098)
6	22636–PR9–000	2.6 (0.102)
7	22637–PR9–000	2.7 (0.106)
8	22638–PR9–000	2.8 (0.110)
9	22639–PR9–000	2.9 (0.114)

3RD CLUTCH

Plate No.	Part Number	Thickness mm (in)
1	22551–PF4–000	2.1 (0.083)
2	22552–PF4–000	2.2 (0.087)
3	22553–PF4–000	2.3 (0.091)
4	22554–PF4–000	2.4 (0.094)
5	22555–PF4–000	2.5 (0.098)
6	22556–PF4–000	2.6 (0.102)
7	22557–PF4–000	2.7 (0.106)
8	22558–PF4–000	2.8 (0.110)
9	22559–PF4–000	2.9 (0.114)
10	22560–PF4–000	3.0 (0.118)

1st-hold Clutch Bearing

Replacement

1. Remove the 1st-hold clutch bearing using a bearing puller.

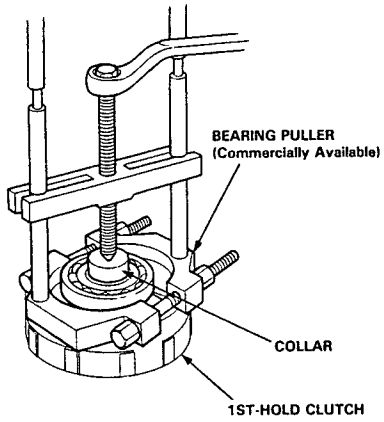

2. Install a new bearing using the special tool as shown.

   NOTE: Drive in the bearing until it fully bottoms.

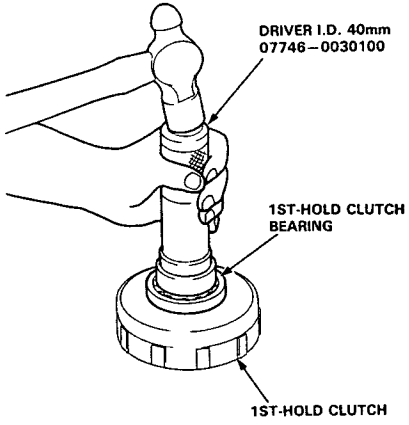

Torque Converter Housing Bearings

Mainshaft Bearing/Oil Seal Replacement

1. Drive out the mainshaft bearing and oil seal using the special tools as shown.

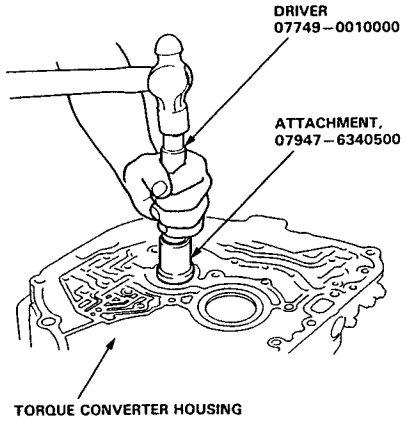

2. Drive in the new mainshaft bearing until it bottoms in the housing, using the special tools as shown.

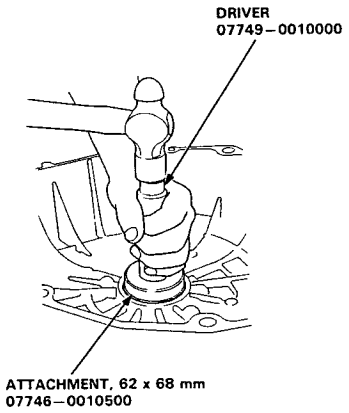

3. Install the new oil seal flush with the housing using the special tools as shown.

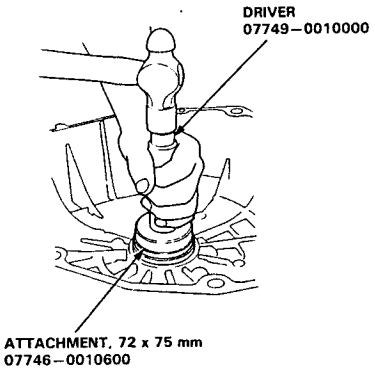

Transmission Housing Bearings

Countershaft Bearing Replacement

1. Remove the countershaft needle bearing using the special tool.

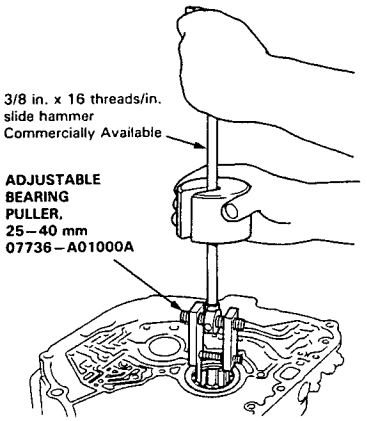

2. Install the oil guide plate.

3. Drive the new bearing into the housing using the special tools as shown.

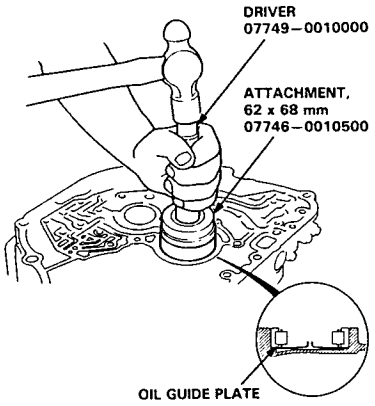

Replacement

1. To remove the mainshaft and countershaft bearings from the transmission housing, expand each snap ring with the snap ring pliers, then push the bearing out.

   NOTE: Do not remove the snap rings unless it's necessary to clean the grooves in the housing.

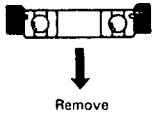

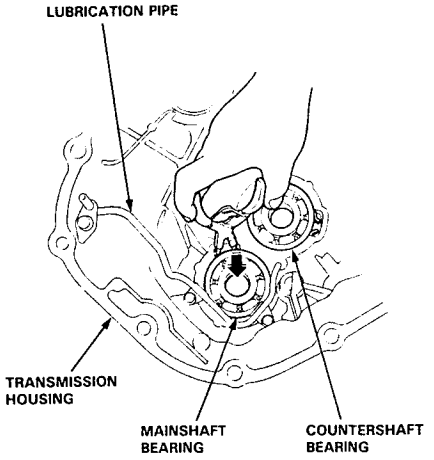

2. Expand each snap ring with the snap ring pliers, insert the new bearing part-way into it, then release the pliers. Push the bearing down into the transmission until the ring snaps in place around it.

   NOTE: Install with groove side of the bearing facing inside the transmission housing.

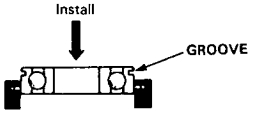

Extension Shaft

Disassembly

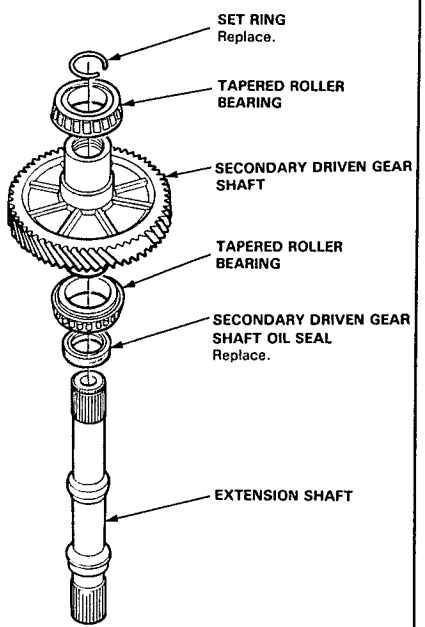

1. Remove the set ring.
2. Remove the extension shaft from the secondary driven gear shaft.

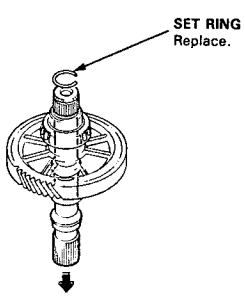

Secondary Driven Gear Shaft Oil Seal

Replacement

1. Remove the oil seal from the secondary driven gear shaft.

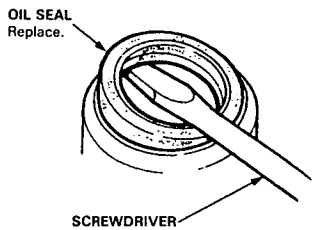

2. Drive the oil seal into the secondary driven gear shaft, using the special tools as shown.

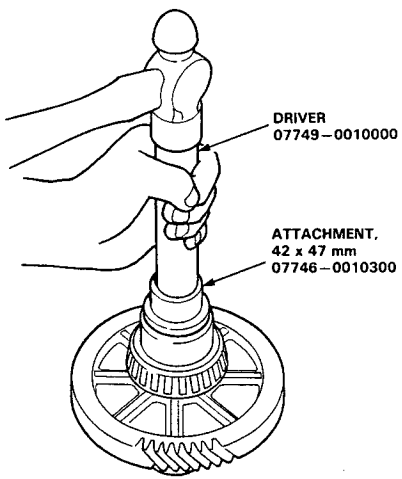

Tapered Roller Bearing

Replacement

NOTE:
- The bearing and outer race should be replaced as a set.
- If the bearing is replaced, inspect and adjust the bearing preload (page 14-158).

1. Remove the tapered roller bearings from the secondary driven gear shaft, using a press.

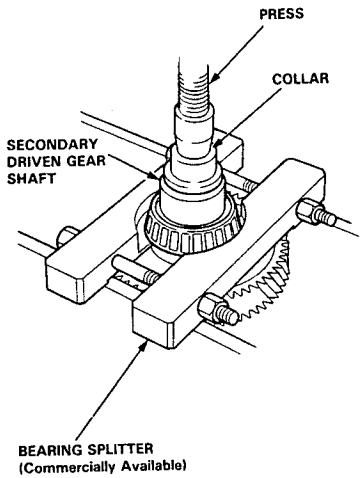

2. Install the bearings using the special tool and a press as shown.

NOTE: Press the bearings in squarely until they bottom.

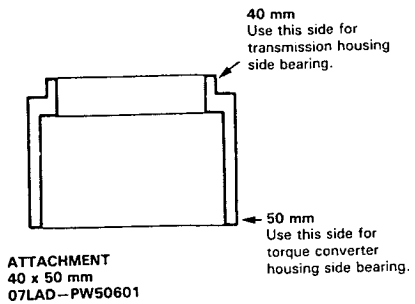

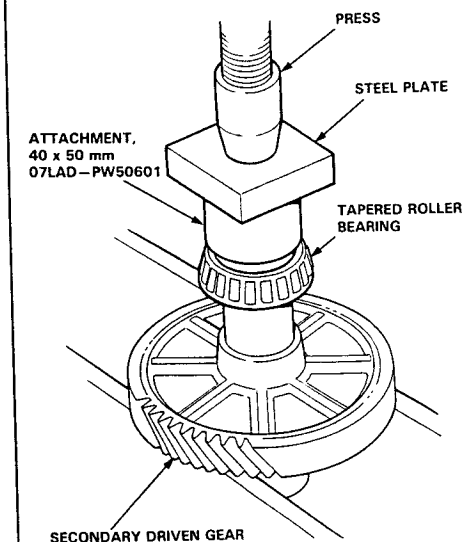

Oil Seal

Removal

1. Remove the oil seal from the transmission housing.

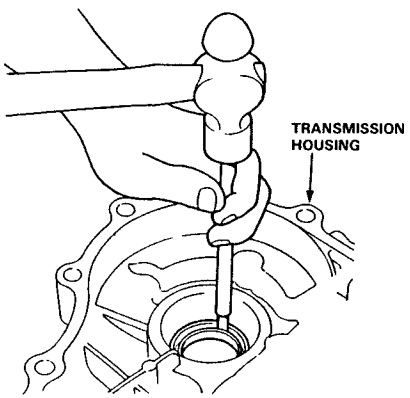

2. Remove the snap ring from the torque converter housing, then remove the oil seal.

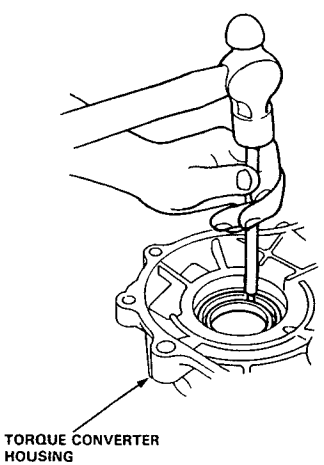

Bearing Outer Race

Replacement

NOTE:
- The bearing and outer race should be replaced as a set.
- If the bearings and/or thrust shim are replaced, inspect and adjust the bearing preload (page 14-158).

1. Remove the bearing outer race by heating the housings to 212°F (100°C) with a heat gun, then tap the housing until the bearing outer race falls out.

   CAUTION: Do not heat the housings in excess of 212°F (100°C).

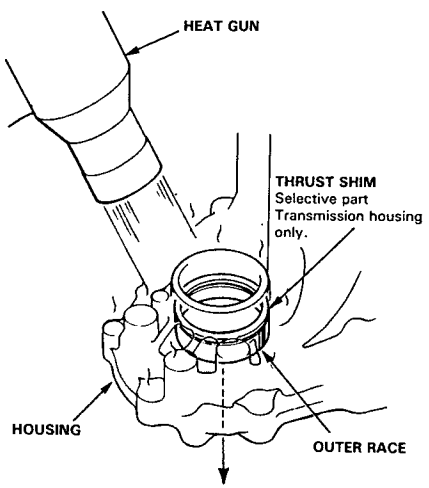

2. Install the thrust shim and bearing outer race in the transmission housing.

3. Drive the bearing outer race into the transmission housing, using the special tools as shown.

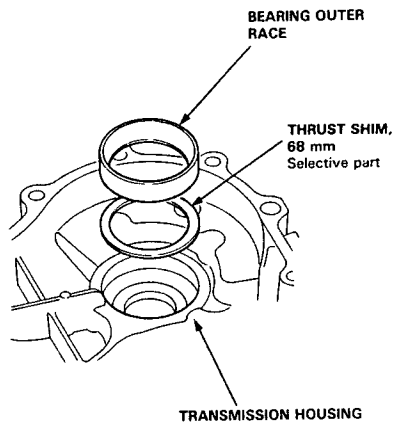

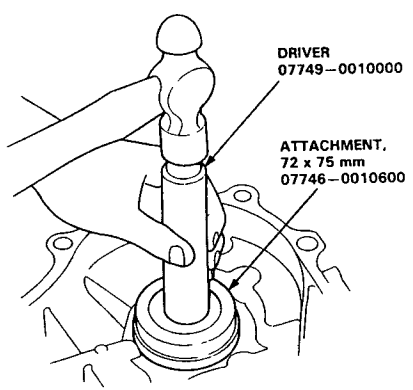

4. Install bearing outer race in the torque converter housing.

5. Drive the bearing outer race into the torque converter housing, using the special tools as shown.

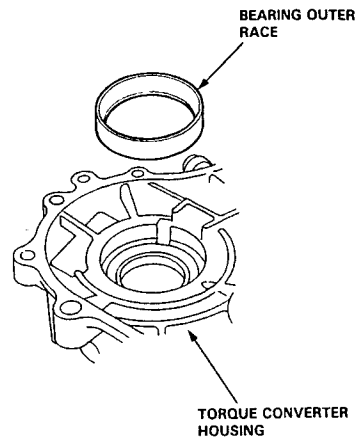

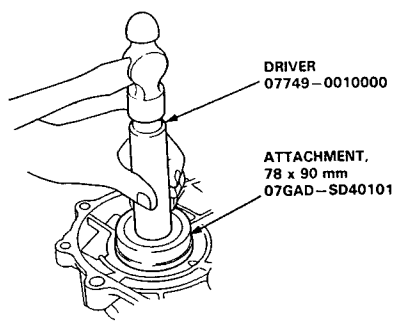

Tapered Roller Bearing Preload

Adjustment

NOTE:
- If any of the listed parts were replaced, the bearing preload must be adjusted:
  - Transmission Housing
  - Torque Converter Housing
  - Tapered Roller Bearing/Bearing Outer Race
  - 68 mm Thrust Shim

CAUTION: If the outer race was removed using heat, let the transmission cool down to room temperature before adjusting the bearing preload.

1. Remove the oil seals from both housings.

2. Install the sealing bolt to the secondary driven gear shaft and torque to 20 N·m (2.0 kg-m, 14 lb-ft).

3. Install the secondary driven gear in the torque converter housing, then install the transmission housing.

   NOTE: Do not install the mainshaft and countershaft.

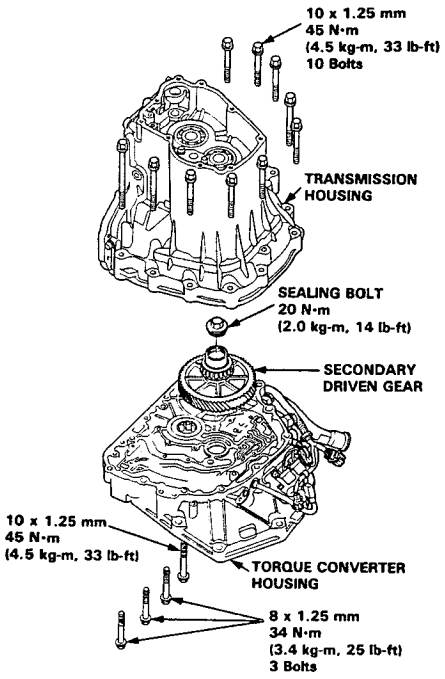

4. Rotate the secondary driven gear in both directions to seat the bearings.

5. Measure the starting torque of the secondary driven gear with a torque wrench.

NOTE:
- Measure the preload at room temperature in both directions.
- Do not use more than one thrust shim to adjust the bearing preload.

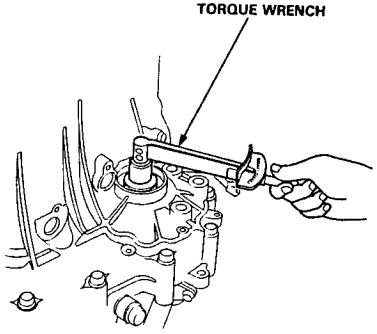

6. If the bearing preload is out of tolerance, select and install a new thrust shim then recheck.

THRUST SHIM 68 mm

No.	Part Number	Thickness mm (in)
A	23941–PW5–000	1.56 (0.061)
B	23942–PW5–000	1.59 (0.063)
C	23943–PW5–000	1.62 (0.064)
D	23944–PW5–000	1.65 (0.065)
E	23945–PW5–000	1.68 (0.066)
F	23946–PW5–000	1.71 (0.067)
G	23947–PW5–000	1.74 (0.069)
H	23948–PW5–000	1.77 (0.070)
I	23949–PW5–000	1.80 (0.071)
J	23950–PW5–000	1.83 (0.072)
K	23951–PW5–000	1.86 (0.073)
L	23952–PW5–000	1.89 (0.074)
M	23953–PW5–000	1.92 (0.076)
N	23954–PW5–000	1.95 (0.077)
O	23955–PW5–000	1.98 (0.078)
P	23956–PW5–000	2.01 (0.079)
Q	23957–PW5–000	2.04 (0.080)
R	23958–PW5–000	2.07 (0.081)
S	23959–PW5–000	2.10 (0.083)
T	23960–PW5–000	2.13 (0.084)
U	23961–PW5–000	2.16 (0.085)
V	23962–PW5–000	2.19 (0.086)
W	23963–PW5–000	2.22 (0.087)
X	23964–PW5–000	2.25 (0.089)
Y	23965–PW5–000	2.28 (0.090)
Z	23966–PW5–000	2.31 (0.091)
AA	23967–PW5–000	2.34 (0.092)
AB	23968–PW5–000	2.37 (0.093)
AC	23969–PW5–000	2.40 (0.094)
AD	23970–PW5–000	2.43 (0.096)

Oil Seal

Installation

1. Install the oil seal into the transmission housing, using the special tool.

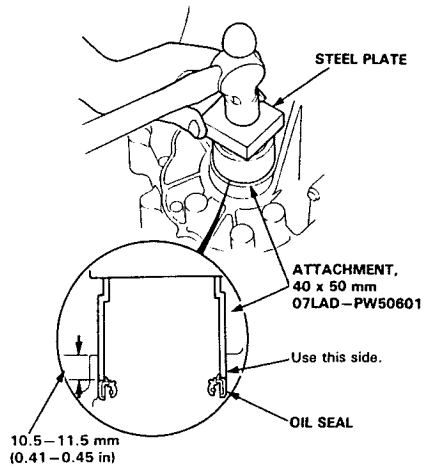

2. Install the oil seal into the torque converter housing, using the special tools as shown.

3. Install the snap ring in the torque converter housing.

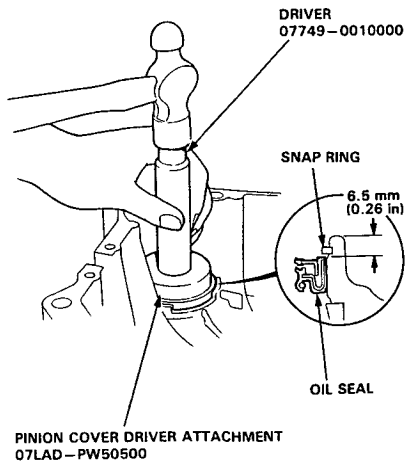

Reverse Idler Gear

Installation

1. Set the spring in the reverse idler gear shaft. Push the spring in with the steel ball then install the needle bearing.

   NOTE: The steel ball is under spring pressure. Take care not to let it pop out.

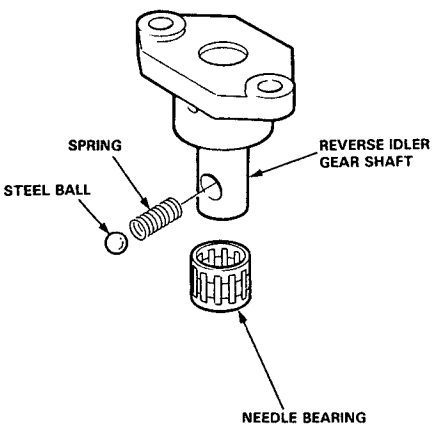

2. Install the reverse idler gear.

3. Install the reverse idler gear shaft holder in the transmission housing, then tighten the bolts.

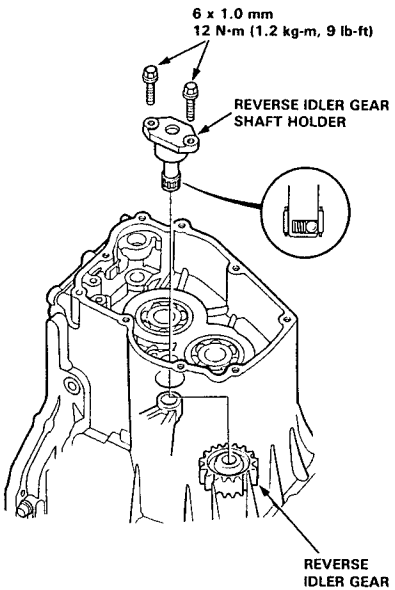

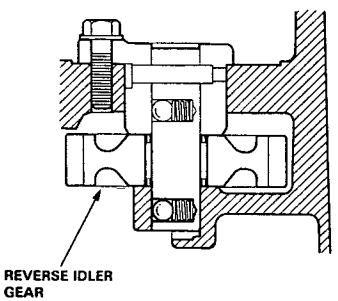

Parking Brake Roller Rod

Adjustment

1. Move the detent lever to the [P] position.

2. Measure the clearance between the parking brake roller rod and the transmission housing as shown.

   STANDARD: 4.0–4.5 mm (0.157–0.177 in)

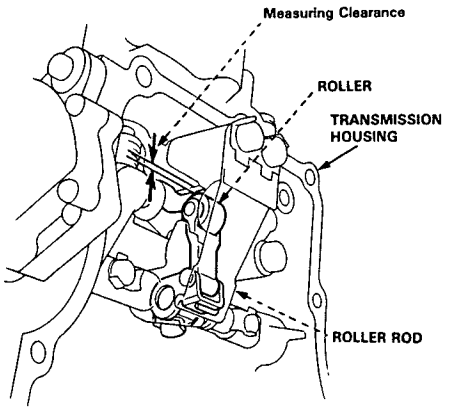

3. If the clearance is out of tolerance, select and install a new parking brake roller rod.

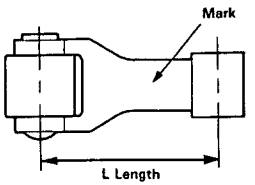

PARKING BRAKE ROLLER ROD

Mark	Part Number	Length "L"
1 or None	24550-PW7-010	36.0 mm (1.42 in)
2	24560-PW7-010	35.6 mm (1.40 in)
3	24580-PW7-010	36.4 mm (1.43 in)

4. After replacing the parking brake roller rod, make sure that the clearance is within tolerance.

Control Shaft/Detent Spring

Disassembly

NOTE: It is necessary to disassemble that the control shaft and/or detent spring maintenance is required.

1. Remove the two special bolts, lock washer, detent spring plate and detent spring.
2. Remove the special bolt securing the parking brake roller guide then remove the parking brake roller guide with two dowel pins from the transmission housing.
3. Remove the three lock bolts with lock washers from the control shaft.
4. Pull the control shaft and remove the detent lever, shift arm roller, parking brake stopper, parking brake shift arm, parking brake roller rod, parking brake shift arm spring and control shaft collar.

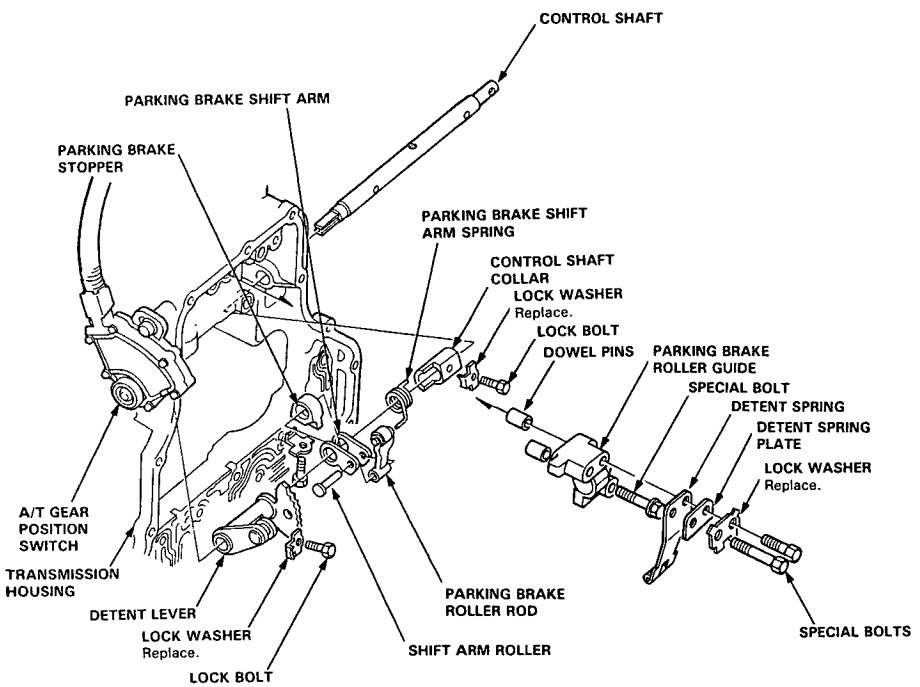

Reassembly

NOTE:
- Coat all parts with ATF.
- Replace the lock washers.

1. Insert the control shaft into the torque converter housing, and install the control shaft collar and parking brake shift arm spring on the control shaft.
2. Set the parking brake shift arm with the parking brake stopper then insert the control shaft into the hole of the parking brake shift arm/parking brake stopper assembly.
3. Install the parking brake roller rod with the shift arm roller on the parking brake shift arm, then install the detent lever on the control shaft.

   CAUTION:
   - **Install the parking brake roller rod with the rivets facing the detent lever.**
   - **Install the shift arm roller with its flange side facing the detent lever.**

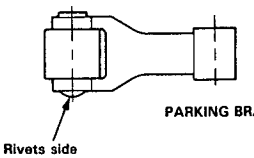

4. Align the cutout of the control shaft with the A/T gear position switch, then insert the control shaft in the A/T gear position switch.
5. Install the lock bolts with new lock washers on the control shaft, and tighten the bolts. Then bend the lock washers against the bolt head.
6. Move the detent lever to other than [P] position.

   CAUTION: If the detent lever is in [P] position when installing the detent spring; you may damage the parking brake roller guide.
7. Install the parking brake roller guide on the transmission housing with the two dowel pins and the special bolt.
8. Install the detent spring, detent spring plate, lock washer and the two special bolts.
9. Tighten the bolts then bend the lock washer.

   TORQUE: 30 N·m (3.0 kg-m, 22 lb-ft)

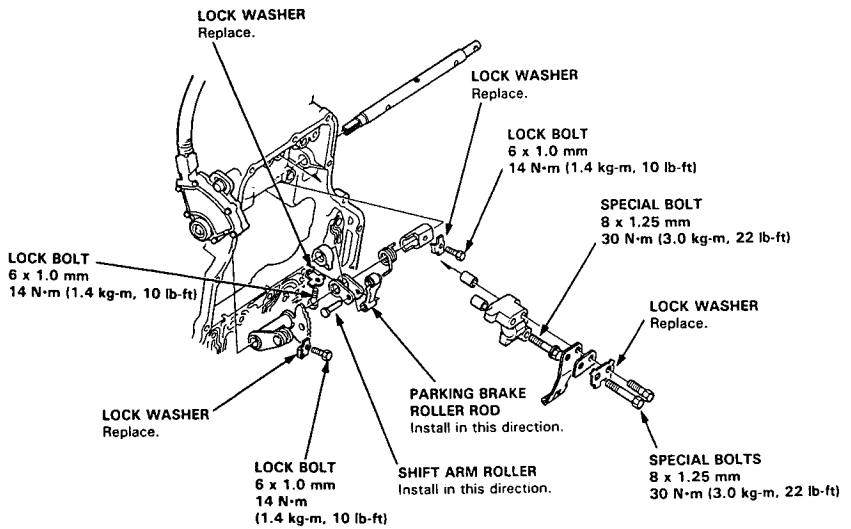

Reassembly

NOTE:
- Coat all parts with ATF.
- Replace parts below:
  - O-rings
  - Lock washers
  - Gaskets
  - Mainshaft and countershaft locknuts and disc springs
  - Sealing washers

TORQUE:
- **6 x 1.0 mm Bolts: 12 N·m (1.2 kg-m, 9 lb-ft)**
- **8 x 1.25 mm Bolts: 18 N·m (1.8 kg-m, 13 lb-ft)**
- **5 x 0.8 mm Flange nuts: 6 N·m (0.6 kg-m, 4 lb-ft)**

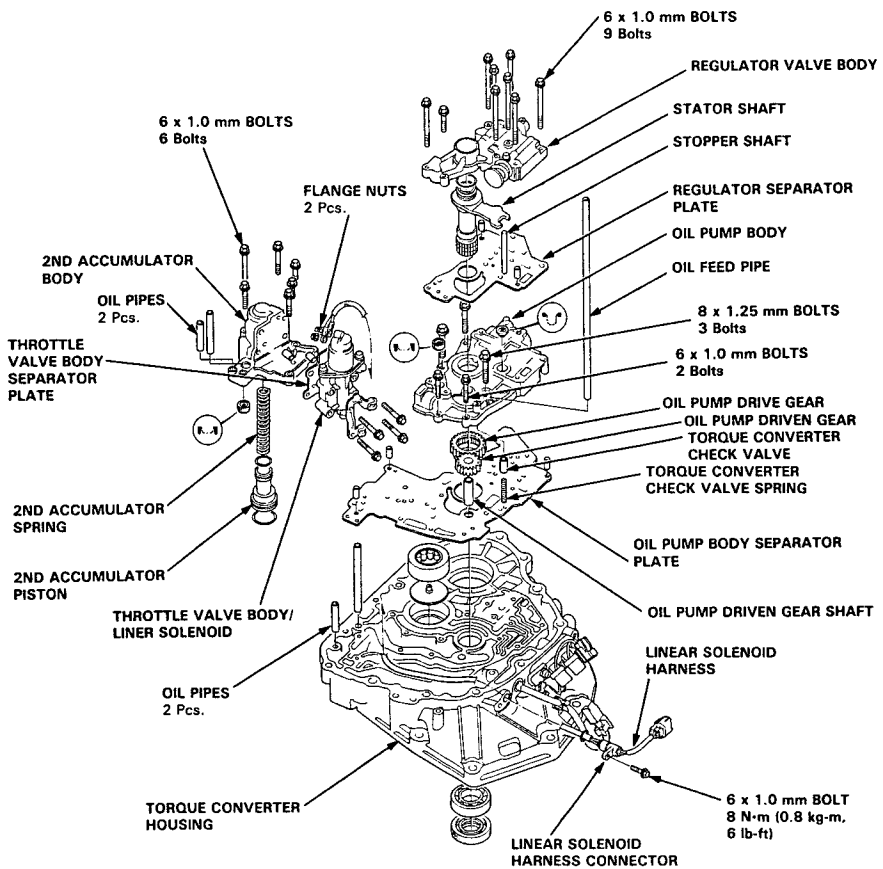

1. Install the linear solenoid harness and linear solenoid harness connector into the torque converter housing.

2. Install the oil pump body separator plate with three dowel pins on the torque converter housing.

   CAUTION: Take care not to pinch the linear solenoid harness.

3. Install the oil pump drive gear, oil pump driven gear, oil pump driven gear shaft, torque converter check valve, and spring on the torque converter housing.

   NOTE: Install the oil pump driven gear with its grooved and chamfered side facing down.

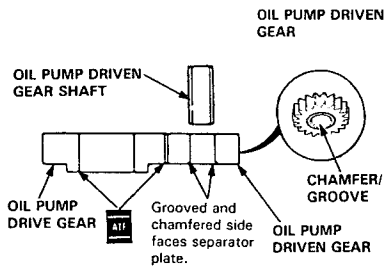

4. Install the oil pump body with three 8 mm bolts and two 6 mm bolts. Make sure the oil pump drive gear rotates smoothly in the normal operating direction and the oil pump driven gear shaft moves smoothly in the axial and normal operating directions.

5. If the oil pump drive gear and oil pump driven gear shaft do not move freely, loosen the oil pump body bolts, realign the oil pump driven gear shaft, and then retighten to the specified torque.

   CAUTION: Failure to align the oil pump driven gear shaft correctly will result in seized oil pump gears and oil pump driven gear shaft.

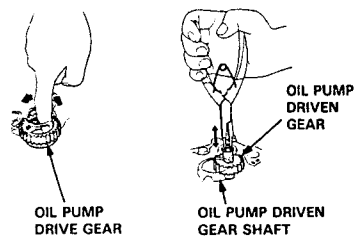

6. Install the throttle valve body/linear solenoid on the 2nd accumulator body with two dowel pins, throttle valve body separator plate, harness clamp and four bolts.

7. Install the 2nd accumulator piston and 2nd accumulator spring in the 2nd accumulator body, then install the 2nd accumulator body on the torque converter housing with six bolts.

8. Install the regulator separtor plate on the oil pump body with two dowel pins.

9. Install the stator shaft with a new O-ring and stopper shaft.

10. Install the regulator valve body with nine bolts.

11. Connect the linear solenoid harness to the linear solenoid terminal, then tighten the flange nuts to 6 N·m (0.6 kg-m, 4 lb-ft).

12. Tighten the linear solenoid harness connector bolt to 8 N·m (0.8 kg-m, 6 lb-ft).

13. Install the oil feed pipe in the oil pump body, two oil pipes in the torque converter housing, and two oil pipes in the 2nd accumulator body.

(cont'd)

Reassembly (cont'd)

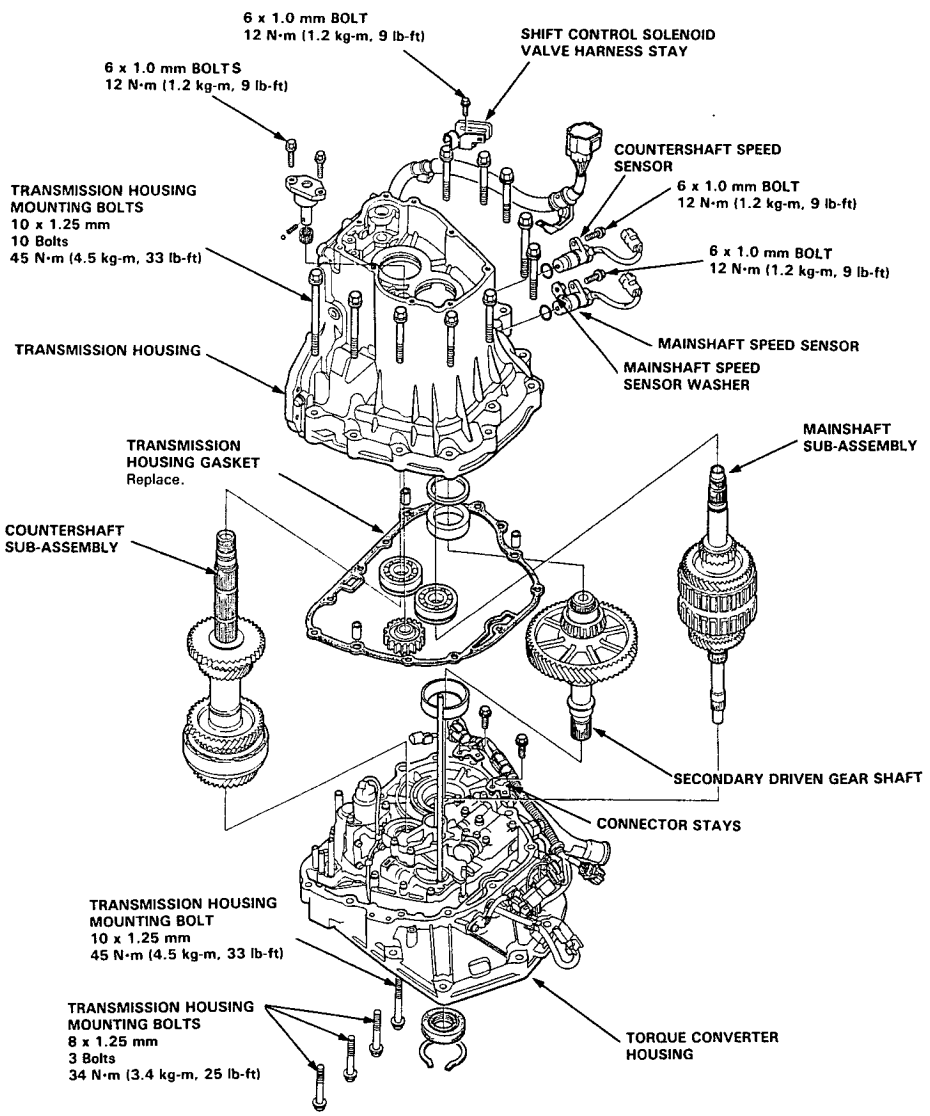

14. Install the reverse idler gear and reverse idler gear shaft holder in the transmission housing (see page 14-160).

15. Install the secondary driven gear shaft in the torque converter housing.

16. Install the mainshaft sub-assembly and countershaft sub-assembly together in the torque converter housing.

17. Install three dowel pins and a new gasket on the torque converter housing.

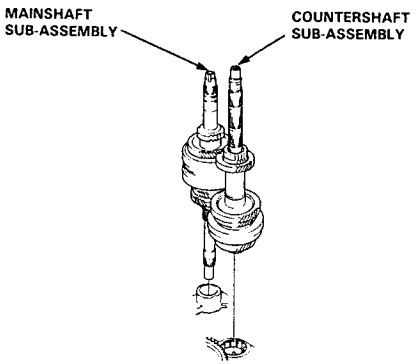

18. Place the transmission housing on the torque converter housing.

CAUTION: Make sure that the mainshaft and countershaft speed sensors are not installed on the transmission housing before installing the transmission housing on the torque converter housing.

19. Install the ten transmission housing bolts and tighten to the 45 N·m (4.5 kg-m, 33 lb-ft) in two or more steps in the pattern as shown.

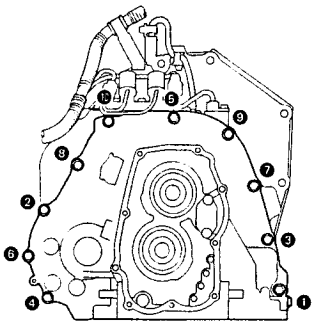

20. Install the 10 mm bolt and three 8 mm bolts to the transmission housing from the torque converter housing to specified torque.

TORQUE:
10 mm Bolt 45 N·m (4.5 kg-m, 33 lb-ft)
8 mm Bolts 34 N·m (3.4 kg-m, 25 lb-ft)

21. Install the mainshaft speed sensor with the mainshaft speed sensor washer and the countershaft speed sensor in the transmission housing.

NOTE: Countershaft speed sensor does not have a washer.

(cont'd)

Reassembly (cont'd)

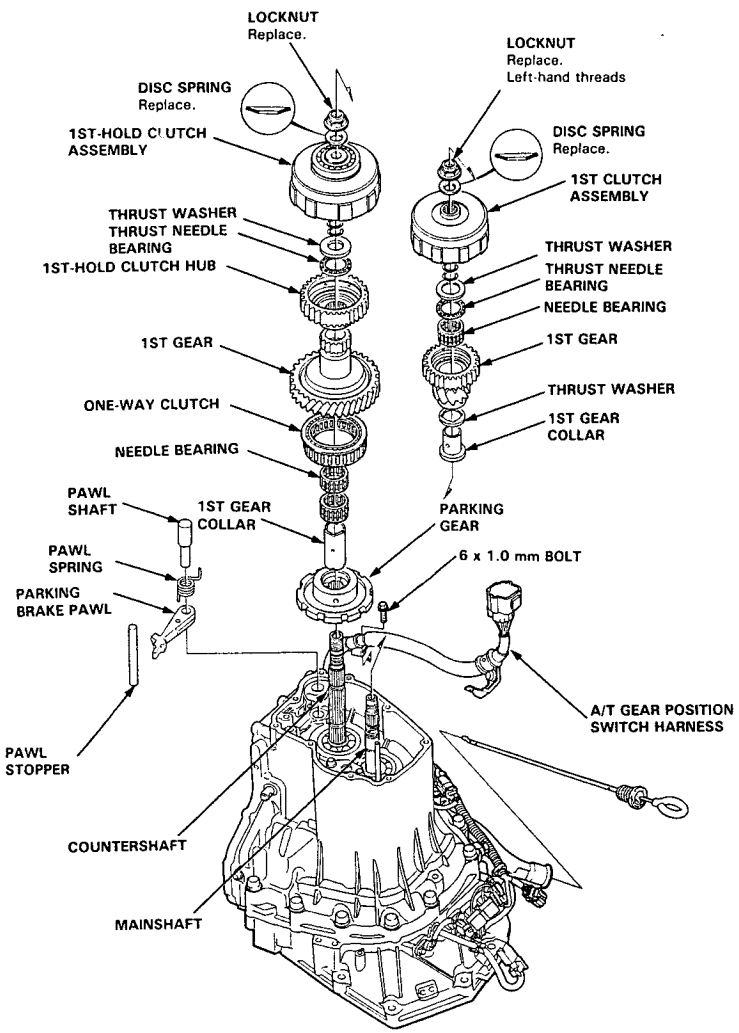

22. Install the mainshaft 1st gear collar and thrust washer on the mainshaft.

23. Install the parking gear, countershaft 1st gear collar and needle bearings on the countershaft.

24. Assemble the one-way in countershaft 1st gear, then install them on the countershaft.

25. Install new O-rings on the mainshaft and countershaft.

    NOTE: Before installing the O-rings, wrap the shaft splines with tape to prevent damage to the O-rings.

26. Install the thrust washer, thrust needle bearing, needle bearing and mainshaft 1st gear in the 1st clutch assembly, then install them on the mainshaft.

27. Install the thrust washer, thrust needle bearing and 1st-hold clutch hub in the 1st-hold clutch assembly, then install them on the countershaft.

28. Install the parking brake pawl and spring on the transmission housing. Align the holes of the pawl and spring with the transmission housing, then install the parking brake pawl shaft. And install the parking brake pawl stopper.

29. Install the special tool onto the mainshaft as shown, then engage the parking brake pawl with the parking gear.

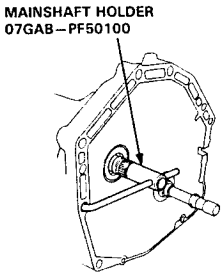

30. Install new locknuts with disc springs on the mainshaft and countershaft.

    NOTE:
    - Install the disc spring so that the stamp side on it faces the locknut as shown.
    - Coat the disc springs with ATF before installing them.

31. Tighten the locknuts to specified torque.

    TORQUE: 140 N·m (14.0 kg-m, 101 lb-ft)

    NOTE: Mainshaft locknut has left-hand threads.

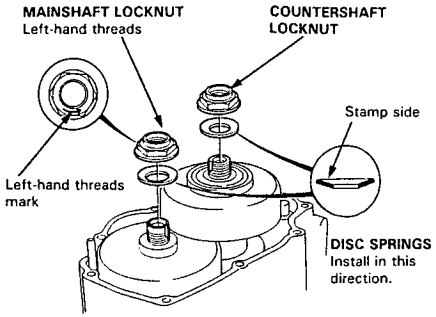

32. Stake each locknut into its shaft using a 3.5 mm (0.14 in) punch.

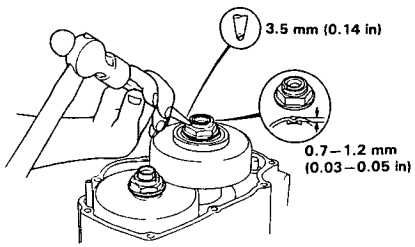

(cont'd)

Reassembly (cont'd)

33. Assemble the lower valve body assembly (see page 14-122).

34. Shift the control shaft to [P] position by turning the detent lever.

35. Push the shift fork on the lower valve body assembly to drive position in the direction as shown.

36. Pass the shift control solenoid valve harness through the transmission housing, and put the manual valve and detent lever together. Then put the shift fork and reverse selector together before installing the lower valve body.

37. Install the lower valve body assembly with two dowel pins and eight bolts in the transmission housing.

    TORQUE: 12 N·m (1.2 kg-m, 9 lb-ft)

38. Install the main valve body plate on the lower valve body assembly with four bolts.

    TORQUE: 12 N·m (1.2 kg-m, 9 lb-ft)

39. Install the shift control solenoid valve harness connector with the bolt.

    TORQUE: 8 N·m (0.8 kg-m, 6 lb-ft)

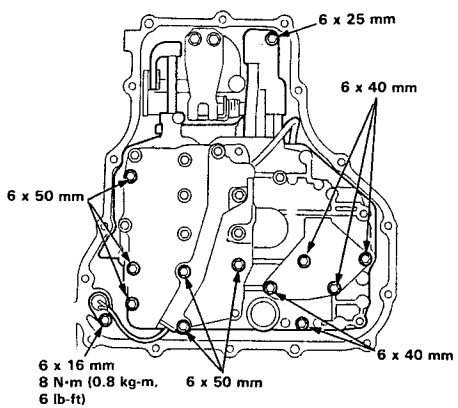

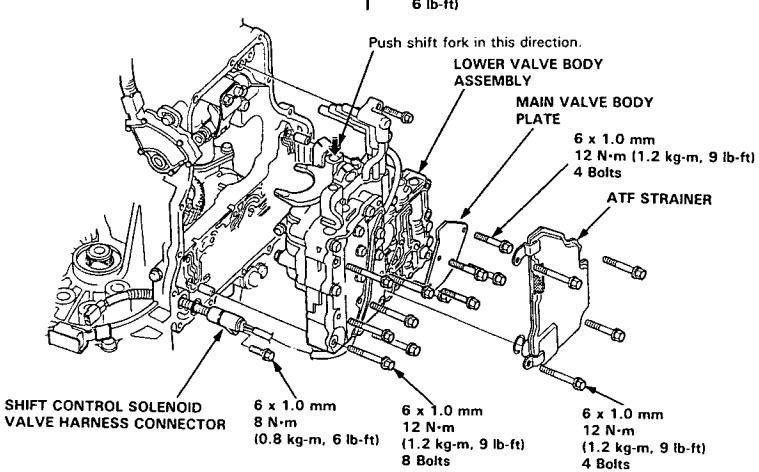

40. Install the ATF strainer on the lower valve body assembly with four bolts.

    TORQUE: 12 N·m (1.2 kg-m, 9 lb-ft)

41. Lightly pull the shift control solenoid valve harness from the harness cover, then bring the shift control solenoid valve harness back. Make sure that the shift control solenoid valve harness is not pinched. If the shift control solenoid valve harness is pinched, loosen four bolts securing the harness cover then retighten the bolts.

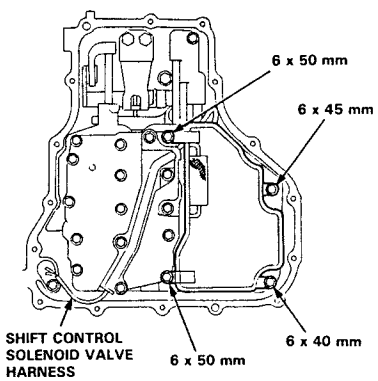

42. Install the oil pan with new oil pan gasket, two dowel pins and eight bolts on the transmission housing.

    TORQUE: 12 N·m (1.2 kg-m, 9 lb-ft)

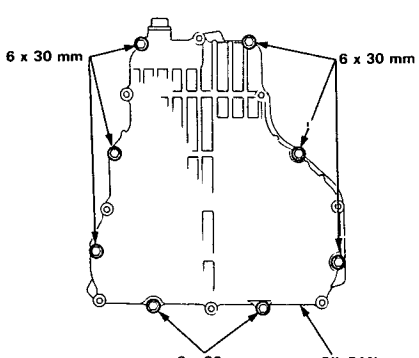

43. Install four oil pipes in the transmission housing.

44. Install the rear cover with new rear cover gasket, two dowel pins and nine bolts on the transmission housing.

    TORQUE: 12 N·m (1.2 kg-m, 9 lb-ft)

45. Install the A/T gear position switch harness clamp then tighten the bolt.

    TORQUE: 12 N·m (1.2 kg-m, 9 lb-ft)

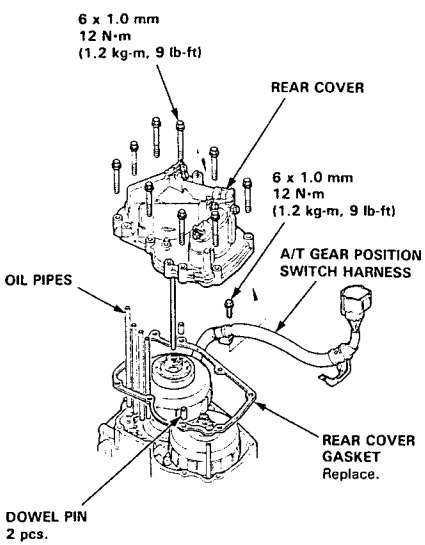

46. Install the ATF cooler pipes with new sealing washers and tighten the joint bolts.

    TORQUE: 29 N·m (2.9 kg-m, 21 lb-ft)

47. Install the ATF level gauge pipe with new O-ring and the bolt.

    TORQUE: 12 N·m (1.2 kg-m, 9 lb-ft)

48. Install the connector stays with the bolts, then connect the shift control solenoid valve connector, mainshaft speed sensor connector, countershaft speed sensor connector and linear solenoid connector to the transmission sub-harness securely.

Torque Converter

Disassembly

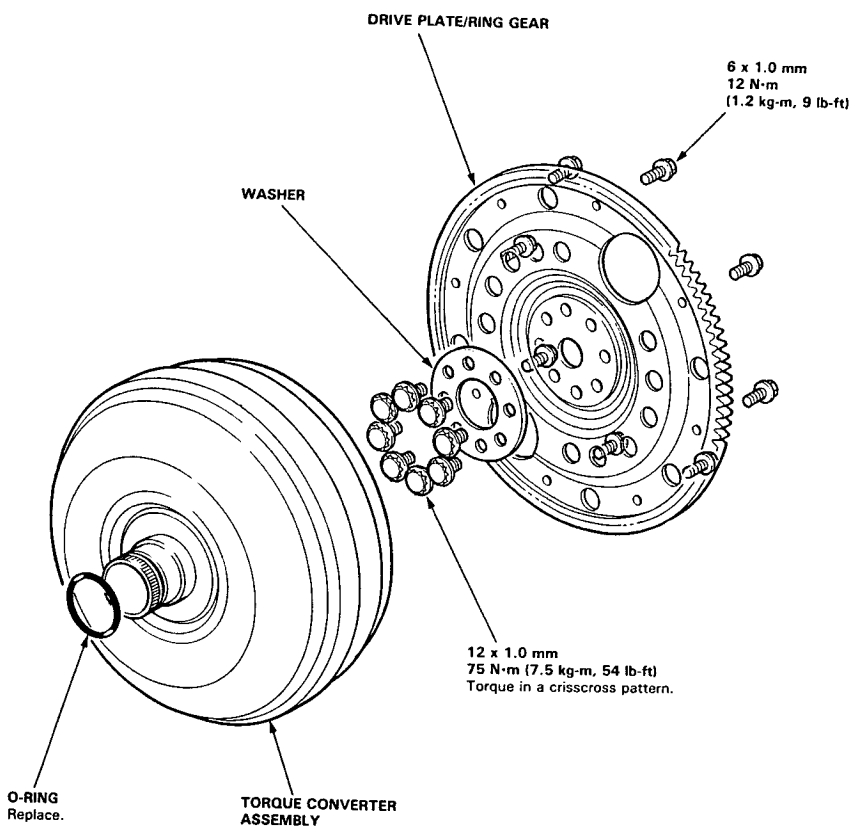

Transmission

Installation

1. Flush the ATF cooler as described on pages 14-178 and 179.
2. Install the torque converter with a new O-ring and two 14 x 20 mm dowel pins in the torque converter housing.

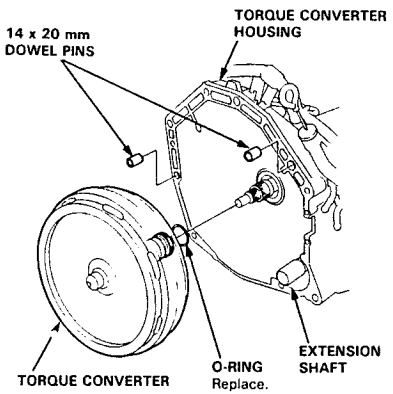

3. Set the extension shaft, apply Super High Temp Urea Grease (P/N 08798–9002) to the shaft splines.
4. Fill the opening of the drive pinion and extension shaft with Super High Temp Urea Grease (P/N 08798–9002), as shown.

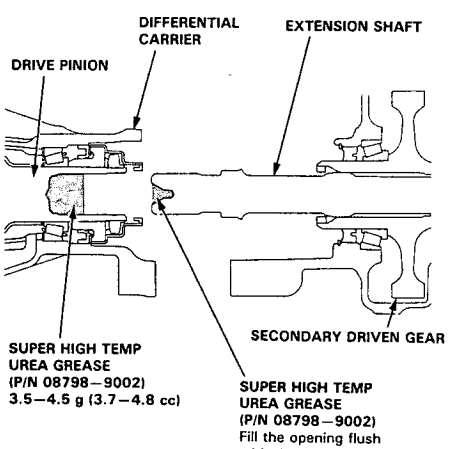

5. Place the transmission on a transmission jack, and raise to the engine level.
6. Install the transmission housing mounting bolts.
7. Install the torque converter cover mounting bolt on the torque converter housing side.

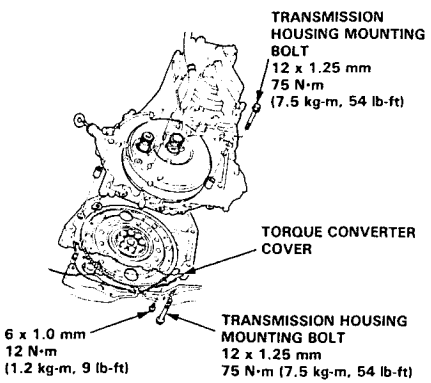

8. Install the mid mount spacer and mid mounts.
9. Install the mid mount nuts.

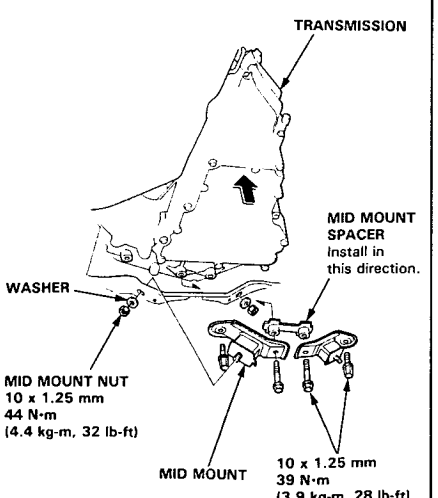

(cont'd)

Installation (cont'd)

10. Install the transmission housing mounting bolts and 26 mm shim.

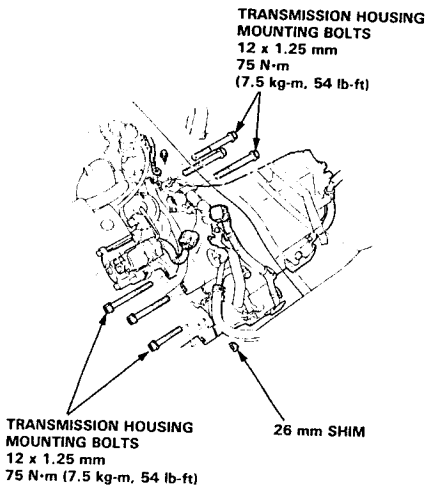

11. Install a new set ring in the extension shaft groove.

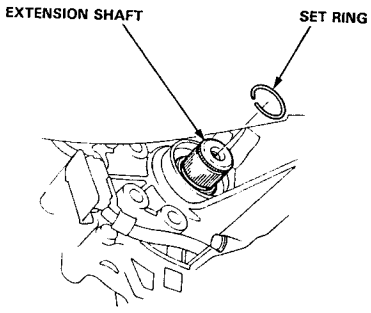

12. Fill the opening of the extension shaft and 33 mm sealing bolt with Super High Temp Urea Grease (P/N 08798–9002), as shown.

13. Apply liquid gasket (P/N 08718–0001) to the 33 mm sealing bolt threads.

14. Install the extension shaft.

15. Shift to [P] position by rotating the control shaft.

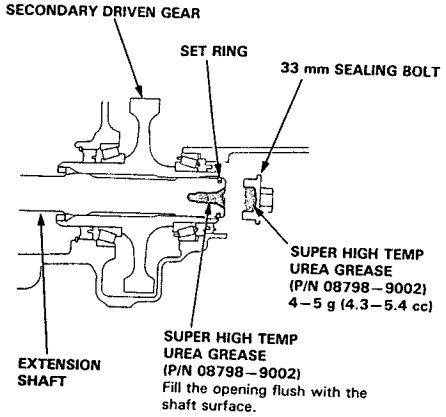

16. Install the 33 mm sealing bolt and secondary cover on the transmission housing.

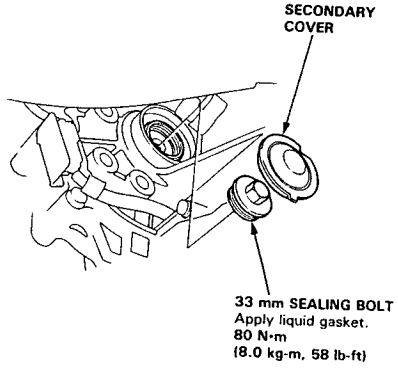

17. Connect the ATF cooler hoses to the joint pipes.

NOTE: Flush the ATF cooler before connecting the cooler hoses.

18. Install the transmission mount bracket and mount.

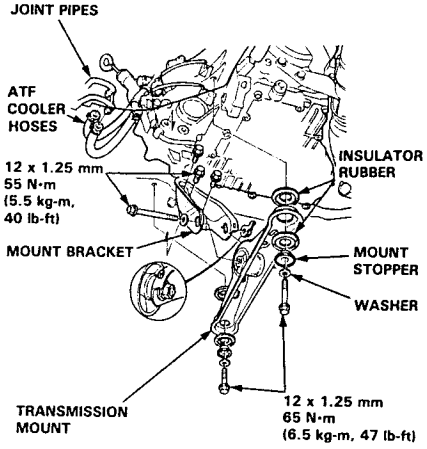

19. Install the A/T gear position switch harness stay, then connect the A/T gear position switch connector.

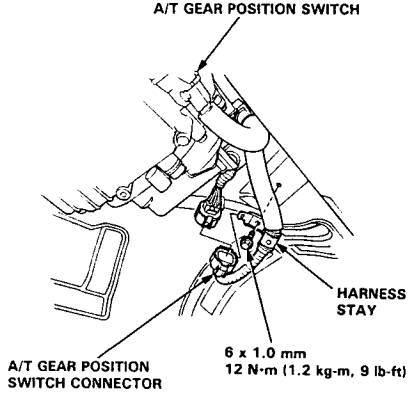

20. Install the shift cable holder on the transmission housing.

21. Install the control lever with a new lock washer to the control shaft.

CAUTION: Take care not to bend the shift cable.

22. Install the shift cable cover.

23. Install the exhaust manifold stay.

24. Install the exhaust pipe A.

25. Install the two bolts of the exhaust pipe A stay to the transmission rear cover.

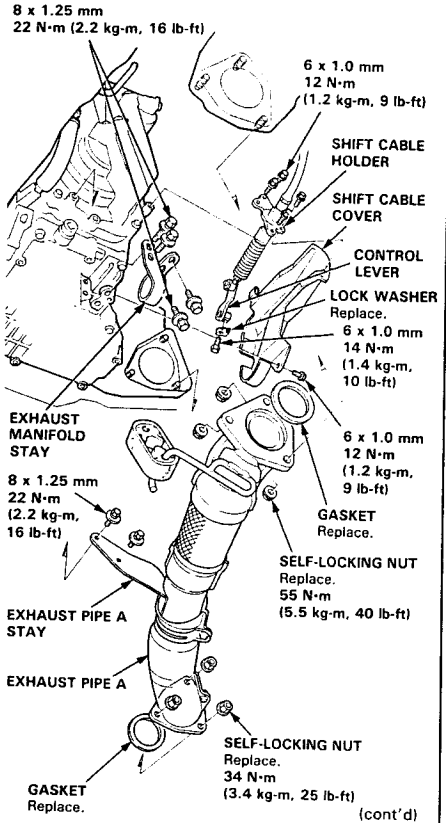

(cont'd)

Installation (cont'd)

26. Install the transmission under-guard.

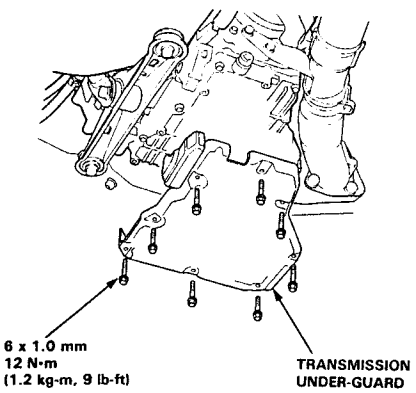

27. Attach the torque converter to the drive plate with eight bolts and torque to 12 N·m (1.2 kg-m, 9lb-ft). Rotate the crankshaft as necessary to tighten the bolts to 1/2 of the specified torque, then final torque, in a criss-cross pattern. After tightening the last bolt, check that the crankshaft rotates freely.

28. Install the torque converter cover.

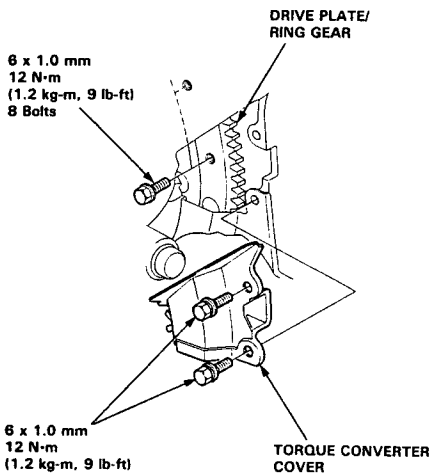

29. Install the transmission ground cable.

30. Connect the transmission sub-harness connector.

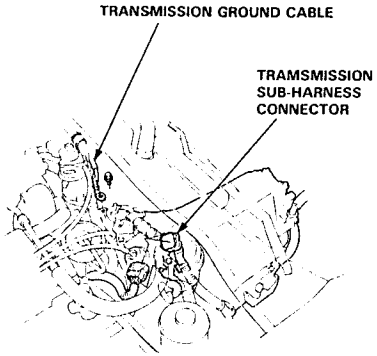

31. Install the control box, then connect the connector.

32. Install the collar with new O-rings in the distributor.

CAUTION: Do not install the collar in the cylinder head.

33. Install the distributor to the cylinder head.

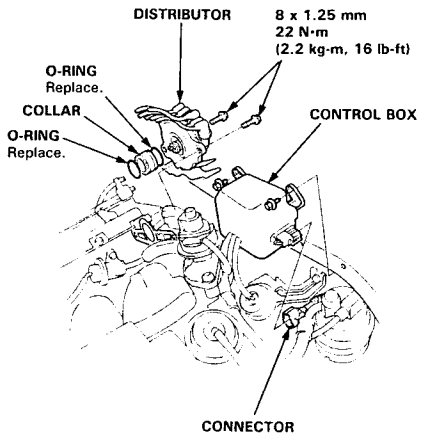

34. Install the heat shield.

35. Install the sub-ground cable.

36. Install the under-hood ABS fuse/relay box.

37. Install the battery with the battery box.

38. Install the battery set plate.

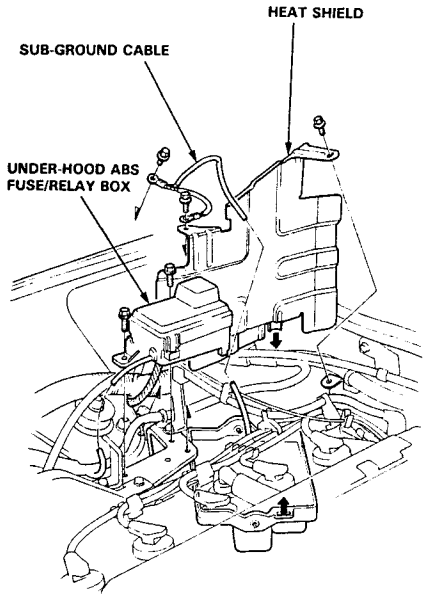

39. Refill the transmission with ATF (see page 14-91).

40. Connect the battery positive (+) and negative (–) cables to the battery.

41. Check the ignition timing (see section 23).

42. Start the engine. Set the parking brake, and shift the transmission through all gears three times. Check for proper shift cable adjustment.

43. Let the engine reach normal operating temperature (the radiator fan comes on) with the transmission in N or P position, then turn it off and check fluid level.

44. Road test as described on pages 14-88 and 89.

45. Reset the radio stations.

Cooler Flushing

WARNING To prevent injury to face and eyes, always wear safety glasses or a face shield when using the transmission flusher.

NOTE: This procedure should be performed before reinstalling the transmission.

1. Check tool and hoses for wear or cracks before using. If wear or cracks are found, replace the hoses before using.

2. Using the measuring cup, fill the tank with 21 ounces (approximately 2/3 full) of biodegradable flushing fluid (J35944-20). Do not substitute with any other fluid. Follow the handling procedure on the fluid container.

3. Secure the flusher filler cap and pressurize the tank with compressed air to between 560–845 kPa (5.6–8.45 kg/cm², 80–120 psi).

   NOTE: The air line should be equipped with a water trap to ensure a dry air system.

4. Hang the tool under the vehicle.

5. Attach the discharge hose of the tank to the return line of the transmission cooler using a clamp.

6. Connect the drain hose to the inlet line of the transmission cooler using a clamp.

   IMPORTANT: Securely clamp the opposite end of the drain hose to a bucket or floor drain.

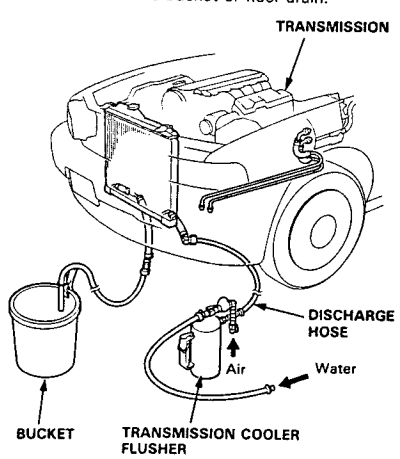

7. With the water and air valves off, attach the water and air supplies to the flusher. (Hot water if available.)

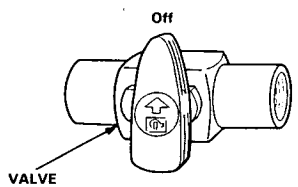

8. Turn on the flusher water valve so water will flow through the oil cooler for 10 seconds.

   NOTE: If water does not flow through the oil cooler it is completely plugged, cannot be flushed, and must be replaced.

9. Depress the trigger to mix the flushing fluid into the water flow. Use the wire clip to hold the trigger down.

10. While flushing with the water and flushing fluid for 2 minutes, turn the air valve on for 5 seconds every 15–20 seconds to create a surging action.
    AIR PRESSURE:
    MAX 845 kPa (8.45 kg/cm², 120 psi)

11. Turn the water valve off. Release the trigger, then reverse the hoses to the cooler so you can flush in the opposite direction. Repeat steps 8 through 10.

12. Release the trigger and allow water only to rinse the cooler with water for one minute.

13. Turn the water valve off and turn off the water supply.

14. Turn the air valve on to dry the system out with air for two full minutes or until no moisture is visible leaving the drain hose.

    CAUTION: Residual moisture in the ATF cooler or pipes can damage the transmission.

15. Remove the flusher from the cooler line. Attach the drain hose to an oil container.

16. Install the transmission and leave the drain hose attached to the cooler line.

17. Make sure the transmission is in the [P] position. Then fill the transmission with ATF and run the engine for 30 seconds or until approximately 0.95 ℓ (1.0 US qt., 0.8 Imp qt.) is discharged.

18. Remove the drain hose and reconnect the cooler return hose to the transmission.

19. Refill the transmission with ATF to the proper level.

TOOL MAINTENANCE

1. Empty and rinse after each use. Fill the can with water and pressurize the can. Flush the discharge line to ensure that the unit is clean.

2. If discharge liquid does not foam, the orifice may be blocked.

3. To clean, remove the coupling nut.

4. Remove the in-line filter from the discharge side and clean if necessary.

5. The fluid orifice is located behind the filter. Clean it with the pick stored in the bottom of the tank handle or blow it clean with air. Securely reassemble all parts.

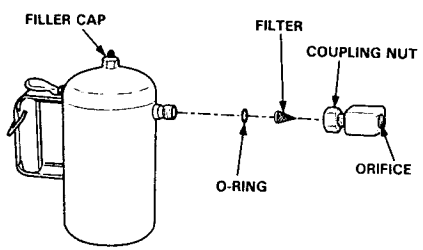

Gearshift Selector

Disassembly/Reassembly

CAUTION:
- All SRS electrical wiring harnesses are covered with yellow outer insulation.
- Before disconnecting the SRS wire harness, install the short connector(s) on the airbag(s).
- Replace the entire affected SRS harness assembly if it has an open circuit or damage wiring.

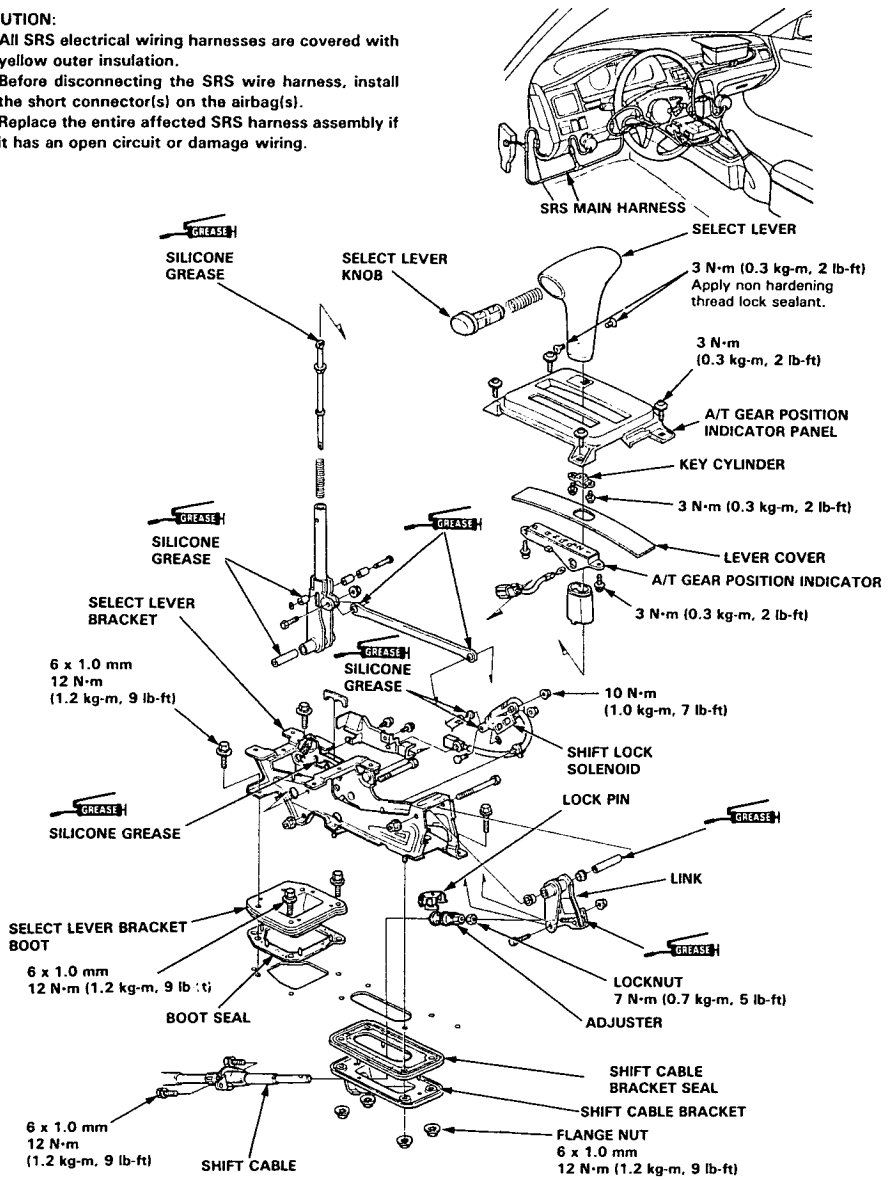

Shift Cable

Removal/Installation

CAUTION:
- All SRS electrical wiring harnesses are covered with yellow outer insulation.
- Before disconnecting the SRS wire harness, install the short connector(s) on the airbag(s).
- Replace the entire affected SRS harness assembly if it has an open circuit or damaged wiring.

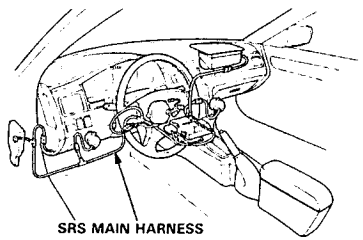

WARNING
- Make sure lifts, jacks and safety stands are placed properly (see section 1).
- Apply parking brake and block rear wheels, so the car will not roll off of the stands and fall while you are working under it.

1. Remove the center console (see section 20).
2. Shift to N position, then remove the lock pin from the cable adjuster.

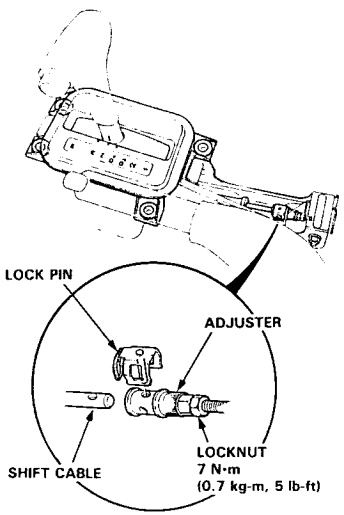

3. Remove the exhaust pipe A/catalytic converter/exhaust pipe B assembly (see section 9).
4. Remove the floor heat shield.
5. Remove the shift cable bracket and shift cable guide bracket.

   CAUTION: Take care not to bend the cable when removing/installing it.

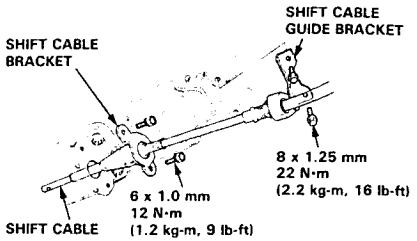

6. Remove the shift cable cover.
7. Remove the shift cable holder from the transmission rear cover.
8. Remove the control lever from the control shaft, then remove the shift cable.
9. Remove the shift cable holder from the shift cable.

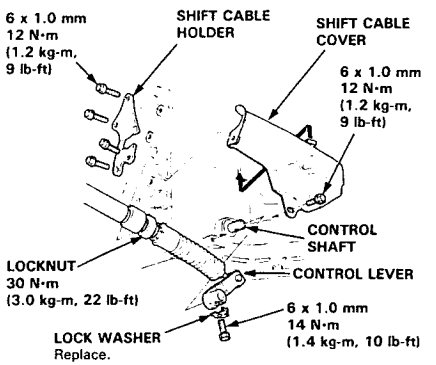

10. Install the shift cable in the reverse order of removal.
11. Check the cable adjustment after reassembly (see page 14-182 and 183).

Shift Cable

Adjustment

CAUTION:
- All SRS electrical wiring harnesses are covered with yellow outer insulation.
- Before disconnecting the SRS wire harness, install the short connector(s) on the airbag(s).
- Replace the entire affected SRS harness assembly if it has an open circuit or damaged wiring.

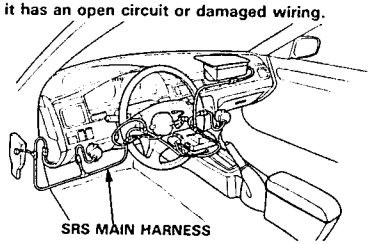

WARNING
- Make sure lifts, jacks and safety stands are placed properly (see section 1).
- Apply parking brake and block rear wheels, so the car will not roll off of the stands and fall while you are working under it.

1. Start the engine. Shift to [R] position and see if the reverse gear engages. If not, refer to troubleshooting.
2. With the engine off, remove the center console (see section 20).
3. Shift to [N] position, then remove the lock pin from the cable adjuster.

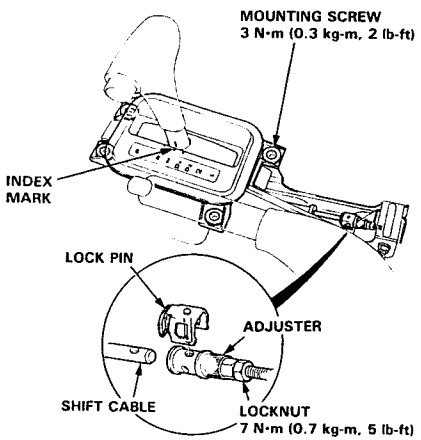

4. Insert a 6 mm pin into the select lever bracket through the lock pin sliding hole.

   CAUTION: Be sure to use a 6 mm pin.

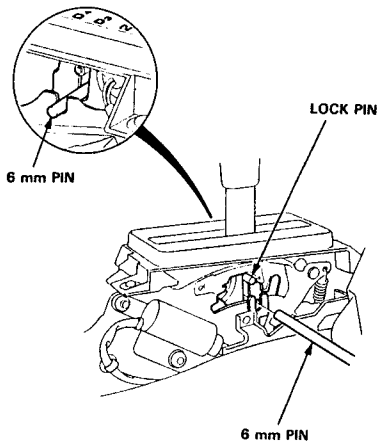

5. Verify that the shift position is in [N] position on the transmission.

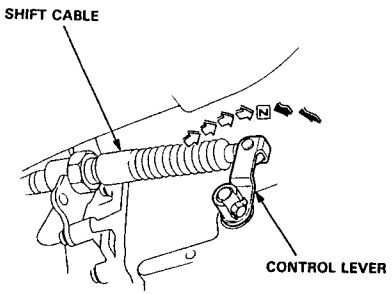

6. Verify that the index mark of the select lever aligns with the [N] mark of the A/T gear position indicator panel. If not aligned, remove the A/T gear position indicator panel mounting screws and adjust by removing the panel (see page 14-184).
7. Turn the ignition switch to ON position, verify that the [N] indicator light comes on.

   CAUTION: Do not start the engine.

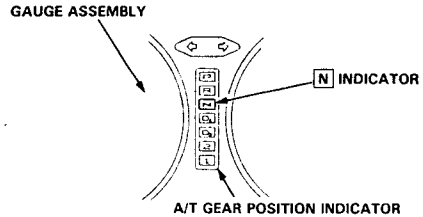

8. Check that the hole in the adjuster is perfectly aligned with the hole in the shift cable.

   NOTE: There are two holes in the end of the shift cable. They are positioned 90° apart to allow cable adjustment in 1/4 turn increments.

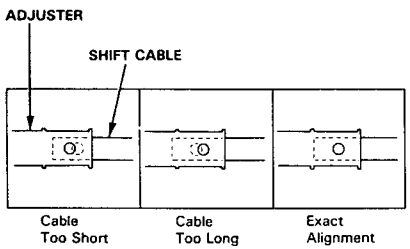

9. If not perfectly aligned, loosen the locknut on shift cable and adjust as required.
10. Tighten the locknut to 7 N·m (0.7 kg-m, 5 lb-ft).
11. Install the lock pin on the adjuster.

    NOTE: If you feel the lock pin binding as you reinstall it, the cable is still out of adjustment and must be readjusted.

12. Remove the 6 mm pin from the select lever bracket.
13. Shift the select lever to [P] position. Pull the select lever without pressing the select lever knob and measure the distance shown using a ruler.

    NOTE: When measuring, hold the tip of the ruler against the console and mark at any point on the top of the select lever.

    STANDARD: 0–4 mm (0–0.16 in)
    - Measure at the top of the select lever

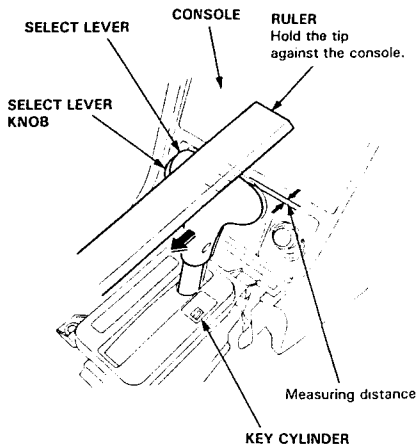

14. If the distance is beyond the standard, readjust the alignment holes in the adjuster and shift cable.
15. Move the select lever through all gears and verify that the A/T gear position indicator follows the A/T gear position switch.
16. Start the engine and check the shift lever in all gears. If any gear does not work properly, refer to troubleshooting on page 14-84 through 87.
17. Insert the ignition key into the key cylinder on the A/T gear position indicator panel and verify that the shift lock lever is released.

A/T Gear Position Indicator Panel

Adjustment

CAUTION:
- All SRS electrical wiring harnesses are covered with yellow outer insulation.
- Before disconnecting the SRS wire harness, install the short connector(s) on the airbag(s).
- Replace the entire affected SRS harness assembly if it has an open circuit or damaged wiring.

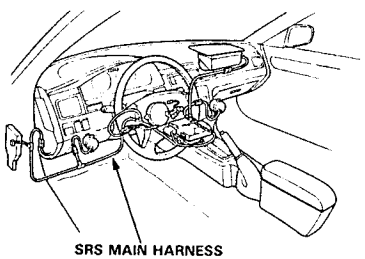

1. Check that the index mark of the select lever aligns with the [N] mark of the A/T gear position indicator panel with the transmission in [N] position.
2. If not aligned, remove the center console (see section 20).
3. Remove the A/T gear position indicator panel mounting screws and adjust by moving the panel.

   NOTE: Whenever the A/T gear position indicator panel is removed, reinstall the panel as described above.

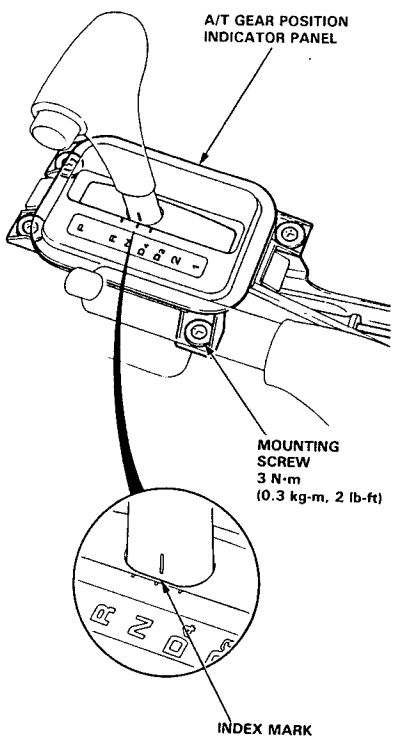

Differential

Special Tools 15-2
Differential
  Troubleshooting 15-3
Maintenance
  Differential Oil 15-4
Differential Assembly
  Removal 15-5
  Illustrated Index 15-8
  Inspection 15-9
  Disassembly 15-11
Differential Carrier
  Tapered Roller Bearing
    Replacement 15-14
  Backlash Inspection 15-15
  Ring Gear Replacement 15-15
Differential Assembly
  Reassembly 15-16
Drive Pinion
  Height Adjustment 15-25
Ring Gear Tooth Contact
  Adjustment 15-26
Ring Gear Backlash
  Adjustment 15-26
Differential Assembly
  Installation 15-27

Differential

Special Tools 15-2
Differential
Troubleshooting 15-3
Maintenance
Differential Oil 15-4
Differential Assembly
Removal 15-5
Illustrated Index 15-8
Inspection 15-9
Disassembly 15-11
Differential Carrier
Tapered Roller Bearing
Replacement 15-14
Backlash Inspection 15-15
Ring Gear Replacement 15-15
Differential Assembly
Reassembly 15-16
Drive Pinion
Height Adjustment 15-25
Ring Gear Tooth Contact
Adjustment 15-26
Ring Gear Backlash
Adjustment 15-26
Differential Assembly
Installation 15-27

Special Tools

Ref. No.	Tool Number	Description	Qty	Page Reference
①	07HAJ–PK40201	Preload Inspection Tool	1	15-9, 10, 21,22
②	07LAC–PW50101	Extension Shaft Puller	1	15-6
③	07LAD–PW50500	Pinion Cover Driver Attachment	1	15-20, 24
④	07MAD–PR90100	Attachment, 45 x 55 mm	1	15-14
⑤	07MAF–SP0011A	Taper Bearing Race Installer A	1	15-16, 17
⑥	07MAF–SP0012A	Taper Bearing Race Installer B	1	15-16, 17
⑦	07MAF–SP0013A	Installer Shaft	1	15-16, 17
⑧	07746–0010600	Attachment, 72 x 75 mm	1	15-17
⑨	07746–0030100	Driver, 40 mm I.D.	1	15-16, 18, 20
⑩	07749–0010000	Driver	1	15-17, 20, 23, 24
⑪	07947–6110501 or 07947–6110500	Driver Attachment	1	15-23

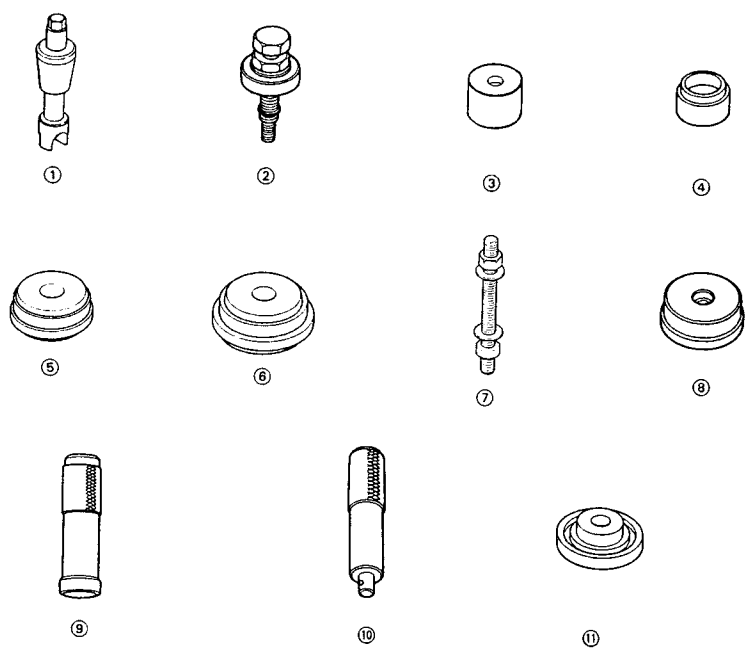

Differential

Troubleshooting

NOTE: Most problems in the unit are to be diagnosed by identifying noises from the gears or bearings. Care should be taken during diagnoisis not to confuse differential noises with those from other drivetrain components.

[Noise symptoms will be most prominent]

Symptom	Probable Cause	Remedy
Consistent noise during cruising	• Lack of oil • Foreign matter stuck in gears, etc. • Improper tooth contact between ring gear and drive pinion • Worn or damaged side bearing • Deformed ring gear or carrier	• Replenish oil • Clean and inspect • Adjust or replace • Replace any damaged or faulty parts
Gear noises while accelerating	• Lack of oil • Foreign matter stuck in gears, etc. • Improper drive pinion preload • Chipped or damaged gears	• Replenish oil • Clean and inspect • Adjust • Replace
Gear noises while coasting or accelerating	• Improper drive pinion preload • Damaged or chipped gears	• Adjust or replace
Bearing noises while accelerating or coasting/deceleration	• Cracked or damaged drive pinion bearing or side bearing	• Replace
Abnormal noises when rounding a curve	• Worn (excessive play) or damaged side bearing • Damaged side gear, pinion, or pinion shaft	• Replace
Abnormal noises during acceleration or when first driving away from a stop.	• Excessive backlash between ring gear and drive pinion. • Improper ring gear or drive pinion preload • Excessive pinion backlash • Worn differential splines • Loose companion flange nuts and other fasteners	• Adjust • Adjust or replace • Recheck torque or replace
Oil leak	• Oil level too high • Clogged breather hole • Loose carrier or inadequate sealing • Worn or damaged oil seal	• Lower to proper level • Clean or replace • Recheck torque or apply sealant • Replace
Overheating	• Lack of oil • Insufficient ring gear-to-pinion backlash • Excessive ring gear or drive pinion preload • Chipped or damaged oil cooler	• Replenish • Adjust • Adjust or replace • Replace
Coolant leak	• Inadequate hose or clamp	• Recheck torque or replace

Maintenance

Differential Oil

NOTE: Check the oil with engine OFF, and the car on level ground.

1. Remove the oil filler plug, then check the level and condition of the oil.

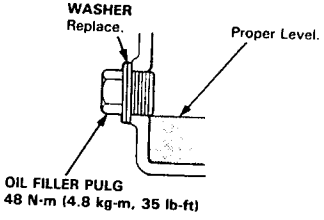

2. The oil level must be up to the fill hole. If it is below the hole, add oil until it runs out, then reinstall the oil filler plug with a new washer.

3. If the differential oil is dirty, remove the drain plug and drain the oil.

4. Reinstall the drain plug with a new washer, and refill the differential oil to the proper level.

   NOTE:
   - The drain plug washer should be replaced at every oil change.
   - Clean the drain plug before reinstalling.

5. Reinstall the oil filler plug with a new washer.

   Oil Capacity
   0.95 ℓ (1.00 US qt, 0.84 Imp qt) at oil change.
   1.05 ℓ (1.11 US qt, 0.92 Imp qt) at overhaul.

   Recommended oil:
   Hypoid gear oil
   API Classification GL4 or GL5, viscosity:
   SAE 90 above 0°F (−18°C)
   SAE 80 W 90 below 0°F (−18°C)

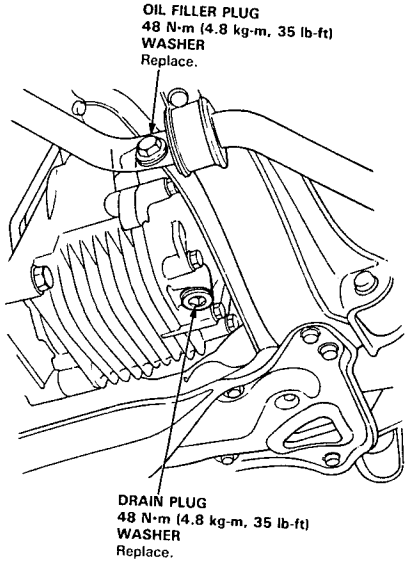

Differential Assembly

Removal

⚠ WARNING
- **Make sure jacks and safety stands are placed properly, and hoist brackets are attached to correct positions on the engine.**
- **Apply parking brake and block rear wheels, so car will not roll off stands and fall on you while working under it.**

CAUTION: Use fender covers to avoid damaging painted surfaces.

NOTE: The radio may have a coded theft protection circuit. Be sure to get the customer's code number before
- Disconnecting the battery.
- Removing the No. 39 (10 A) fuse in the under-hood fuse/relay box
- Removing the radio.

After service, reconnect power to the radio and turn it on. When the word "CODE" is displayed, enter the customer's 5-digit code to restore radio operation.

1. Disconnect the battery negative (−) and positive (+) cables from the battery.

2. Remove the air cleaner assembly.

3. Remove the drain plug, and drain the differential oil (see page 15-4).

4. Remove the driveshafts and intermediate shaft (see section 16).

5. Attach a hoist chain to the engine hanger plate, then lift the engine slightly to unload the mounts.

6. Remove the splash guard.

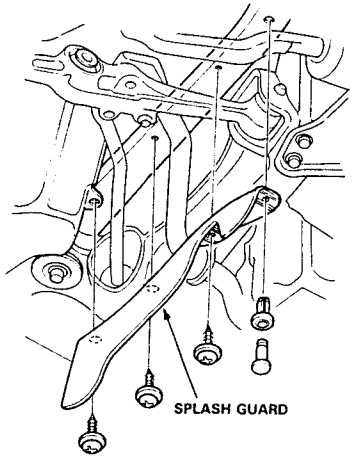

7. Remove the front stopper bracket A, front stopper insulator rubber and left front engine mount bracket.

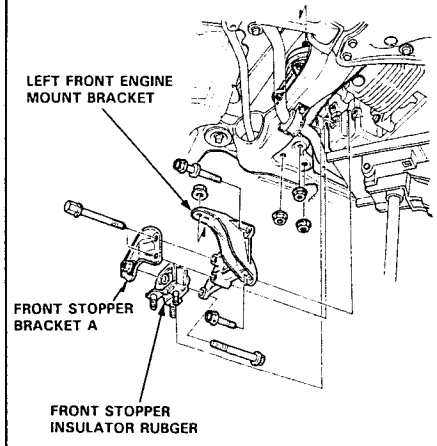

(cont'd)

Differential Assembly

Removal (cont'd)

8. Remove the transmission mount beam and the transmission mount bracket.

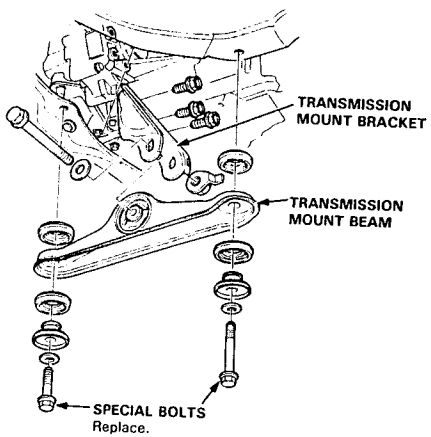

9. Remove the secondary cover and the 33 mm sealing bolt.

NOTE: Shift to 1st gear (M/T) or [P] position (A/T) to lock the secondary gear.

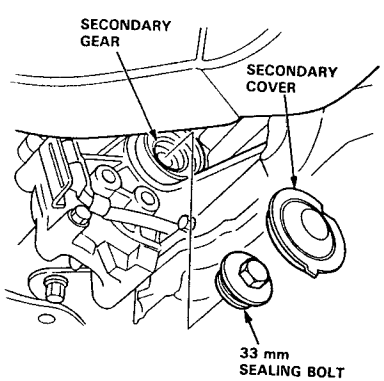

10. Disconnect the extension shaft from the differential using the special tool as shown.

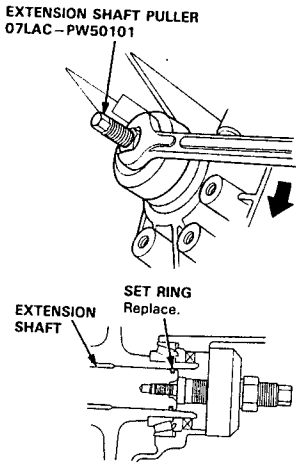

11. Disconnect the oil cooler hoses, breather tube and VSS connector, then remove the vehicle speed sensor (VSS)/power steering speed sensor.

NOTE:
- Do not disconnect the hoses of the power steering speed sensor.
- Do not let the engine coolant flow into the differential.

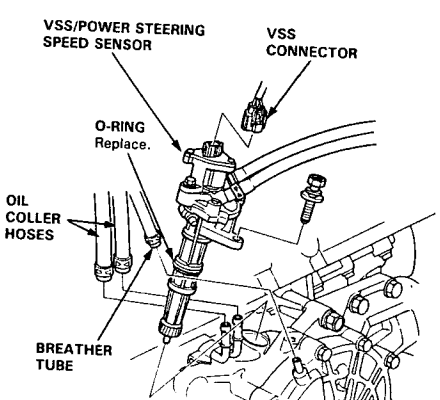

12. Remove the mounting bolts and the 26 mm shim.

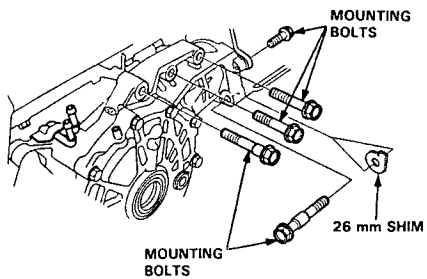

13. Remove the mounting bolts and the differential assembly.

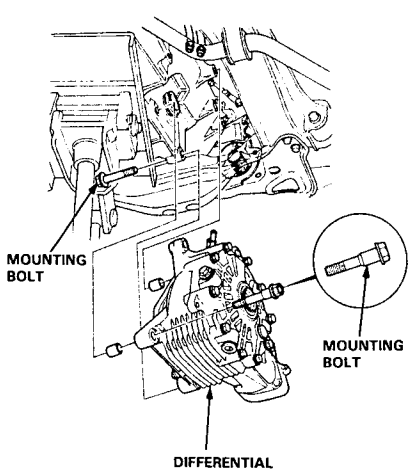

Differential Assembly

Illustrated Index

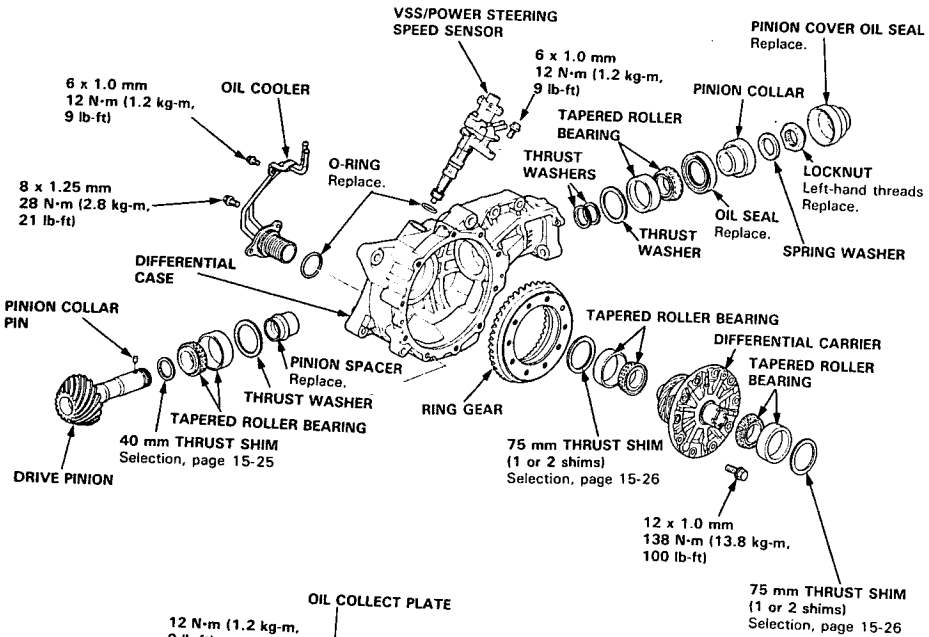

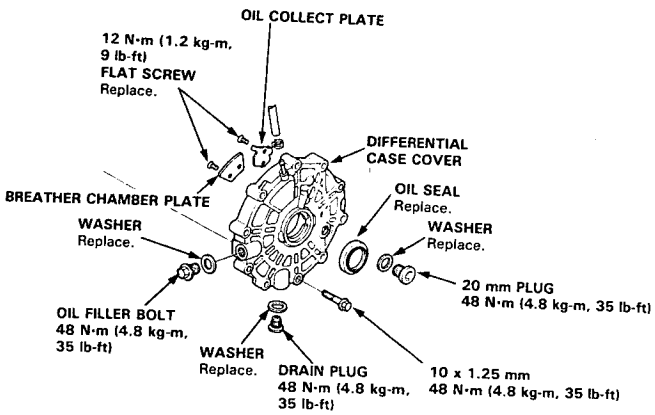

Inspection

To establish a starting point before disassembly, it is necessary to inspect the following:

- Ring gear backlash
- Total bearing preload
- Gear tooth contact

NOTE:
- Be sure the differential is at room temperature before inspecting.
- Record the results of the preliminary inspections as this information will become helpful during reassembly.

Ring gear backlash

1. Remove the 20 mm plug and the oil seal.

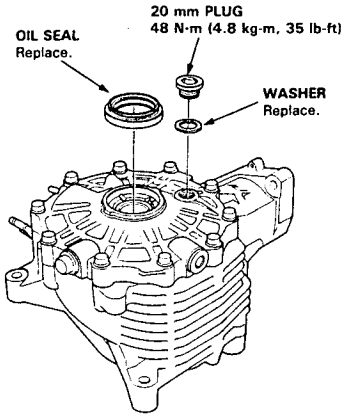

2. Secure the differential assembly in a vise using soft jaws.

3. Align a differential carrier rib with the 20 mm plug hole and install special tools as shown.

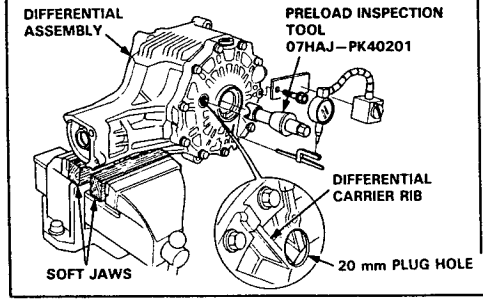

4. Measure the backlash of the ring gear in 3–4 places on the differential carrier using the special tools as shown.

Standard: 0.04–0.10 mm (0.002–0.004 in)

The difference among the 3–4 measurements taken, must not exceed 0.04 mm (0.002 in).

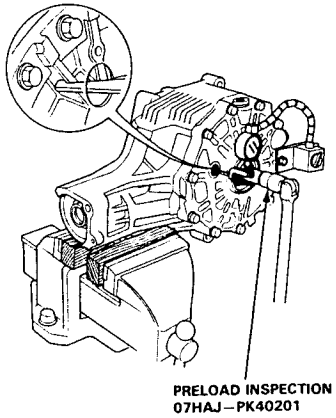

5. Remove the pinion cover oil seal by punching two holes in the seal 180° apart. Use the same pry point and alternate between the two holes to lift the seal as shown.

NOTE: Use a wood block to protect the differential case.

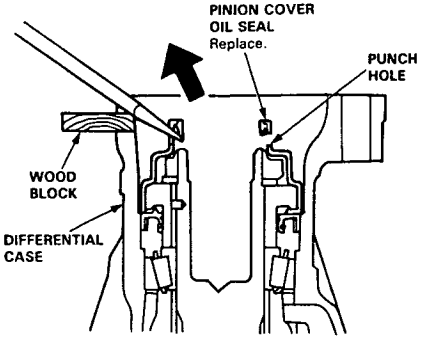

(cont'd)

Differential Assembly

Inspection (cont'd)

Total bearing preload

6. Use a dial-type torque wrench on the drive pinion to measure the total bearing preload.

   Standard: 1.56–2.20 N·m (15.6–22.0 kg-cm, 13.5–19.1 lb-in)

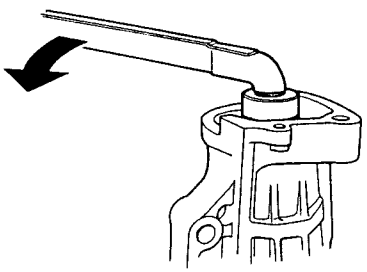

Gear tooth contact

7. Remove the differential case cover and differential carrier. Clean and paint the ring gear teeth lightly and evenly with Prussian Blue (on both sides of each tooth).

   NOTE: Loosen the bolts in a crisscross pattern, in several steps.

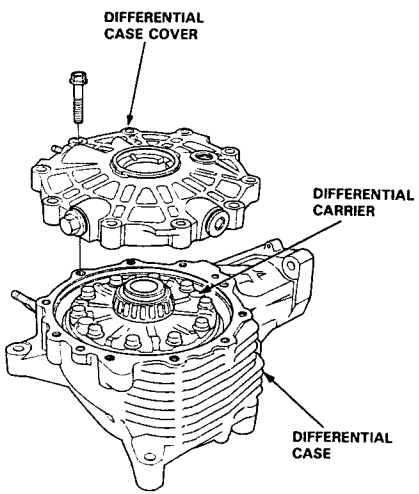

8. Reinstall the differential carrier and the differential case cover, then torque the bolts in a crisscross pattern, in several steps.

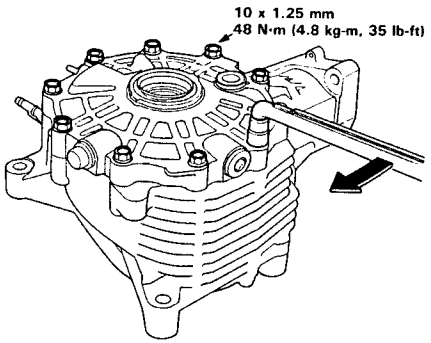

9. Install the special tool as shown. Rotate the ring gear one full turn in both directions while applying resistance to the drive pinion.

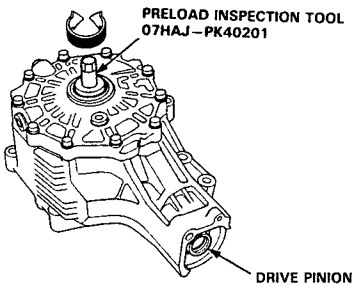

10. Remove the differential case cover and the differential carrier, then check the tooth contact pattern.

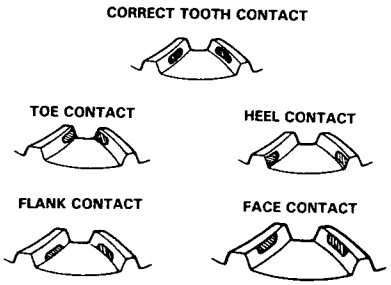

Disassembly

1. Remove the bolts in a crisscross pattern, in several steps, then remove the differential case cover.

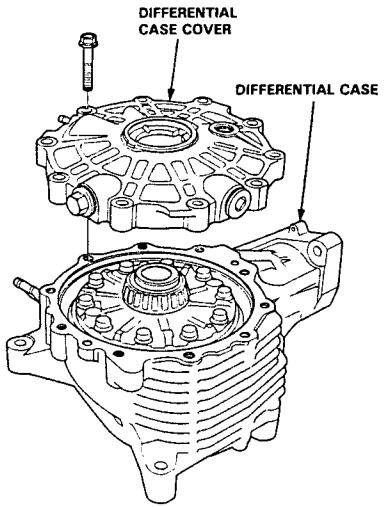

2. Remove the oil seal from the differential case cover.

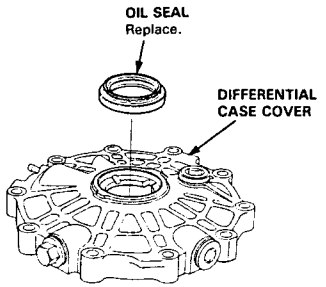

3. Remove the bearing outer race and the 75 mm thrust shim from the differential case cover by driving them out or by heating the differential case cover to about 212°F (100°C).

   CAUTION: Do not reuse the 75 mm thrust shim if the bearing outer race was driven out.

   NOTE:
   - Do not heat the differential case cover in excess of 212°F (100°C).
   - If the bearing outer race was removed by heating, allow the differential cover to cool to room temperature.
   - Replace the tapered roller bearing with a new one whenever the bearing outer race is replaced.

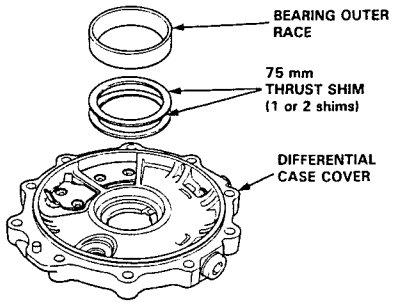

4. Remove the breather chamber plate and the oil collect plate.

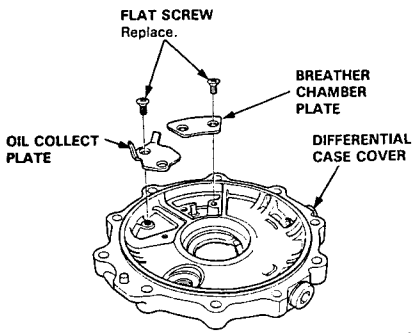

(cont'd)

Differential Assembly

Disassembly (cont'd)

5. Remove the differential carrier from the differential case.

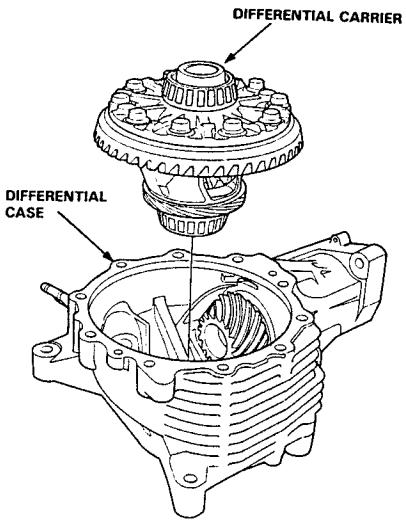

6. Remove the oil cooler.

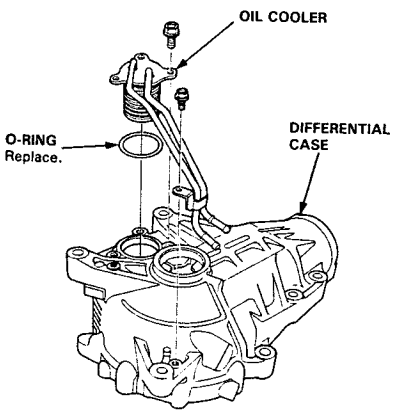

7. Raise the locknut tab from the groove of the drive pinion.

CAUTION: Make sure that the tab completely clears the groove to prevent damage the drive pinion threads.

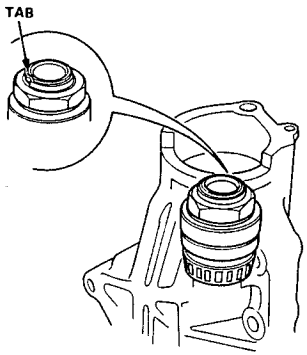

8. Hold the drive pinion using a 17 mm hex wrench as shown.

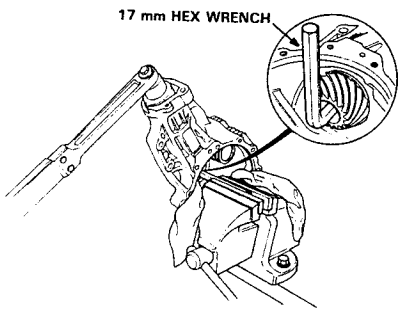

9. Remove the locknut and the spring washer from the drive pinion.

NOTE: The locknut has left-hand threads.

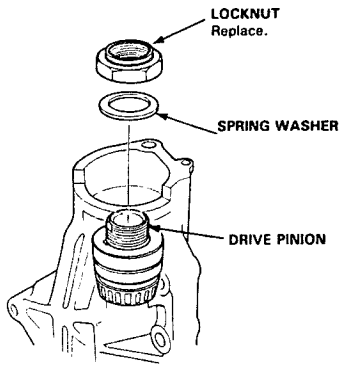

10. Remove the pinion collar, the oil seal, and the pinion collar pin, then tap the drive pinion through the tapered roller bearing.

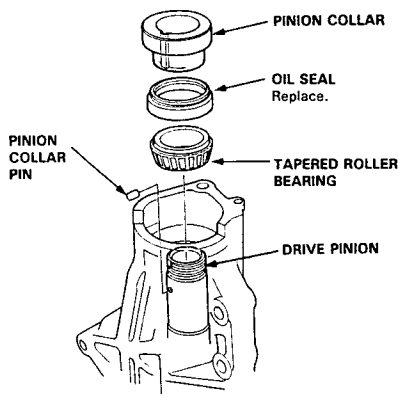

11. Remove the drive pinion, the pinion spacer, and the thrust washers.

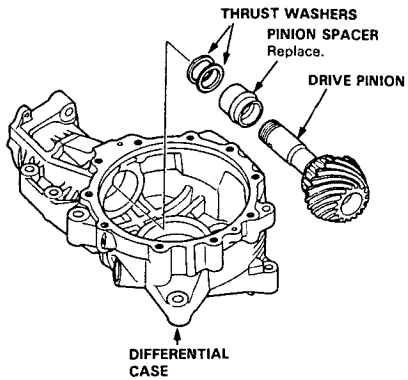

12. Remove the tapered roller bearing and 40 mm thrust shim using a press as shown.

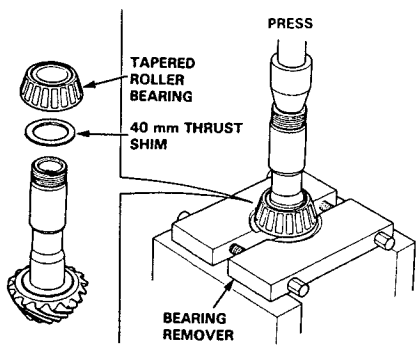

(cont'd)

Differential Assembly

Disassembly (cont'd)

13. Remove the bearing outer races, 75 mm thrust shim(s), and thrust washers by driving them out from behind using the grooves provided or by heating the differential case to about 212°F (100°C).

NOTE: Use care when driving out the bearing outer races to prevent damage to the differential case.

CAUTION: Do not reuse the 75 mm thrust shim and thrust washer if the bearing outer race was driven out.

NOTE:
- Do not heat the differential case in excess of 212°F (100°C).
- If the bearing outer race was removed by heating, allow the differential care to cool to room temperature.
- Replace the tapered roller bearing with a new one whenever the bearing outer race is replaced.

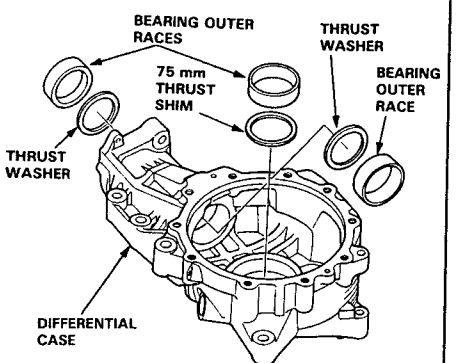

Differential Carrier

Tapered Raller Bearing Replacement

1. Remove the tapered roller bearings using a press as shown.

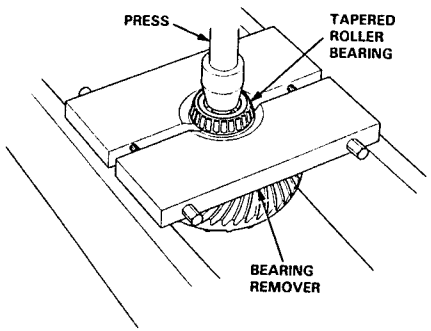

2. Install the tapered roller bearings using the special tools and a press as shown.

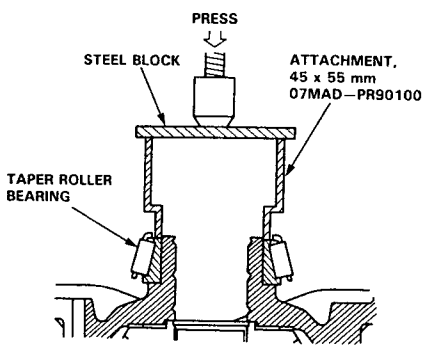

Backlash Inspection

1. Remove the tapered roller bearings (see page 15-14).
2. Install the left driveshaft and the intermediate shaft in the side gears.
3. Measure the backlash of both pinion gears.

Standard: 0.05—0.15 mm (0.002—0.006 in)
Service Limit: 0.30 mm (0.012 in)

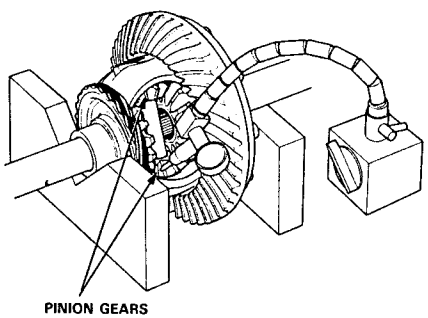

If the backlash exceeds the service limit, replace the differential carrier.

Ring Gear Replacement

1. Remove the bolts in a crisscross pattern, in several steps, and remove the ring gear.

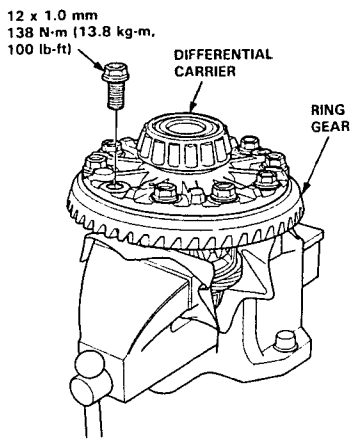

2. Install the ring gear by tightening the bolts in a crisscross pattern, in several steps.
If the bolts are difficult to tighten, make sure that the ring gear is going on to the differential carrier correctly.

Differential Assembly

Reassembly

NOTE:
- If replacement is required, always replace the drive pinion and ring gear as a set.
- If the drive pinion and ring gear are replaced, check the height adjustment (see page 15-25).

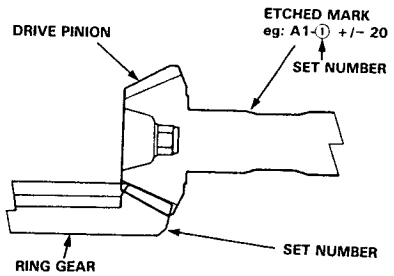

1. Install the 40 mm thrust shim and tapered roller bearing using the special tool and a press as shown.

   NOTE: Use a used pinion spacer with the special tool for bearing installation, and then discard the used pinion spacer.

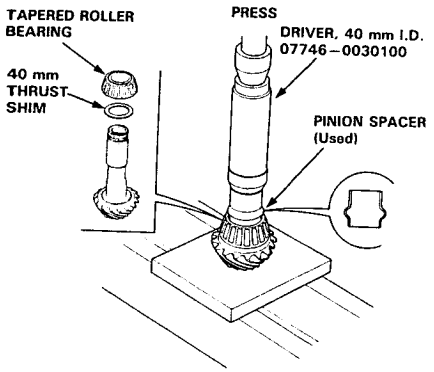

2. Check the differential case bearing surface areas for burrs, and remove as needed. Position the inboard thrust washer into the differential case. Using the sides of the special tools stamped "B", install the inboard bearing outer race as shown. Repeat for the outboard bearing outer race.

   NOTE:
   - Heating the differential case to about 212°F (100°C) will assist the bearing outer race installation.
   - Do not heat the differential case in excess of 212°F (100°C).
   - Let the differential case cool to room temperature before adjusting the tapered roller bearing preload.

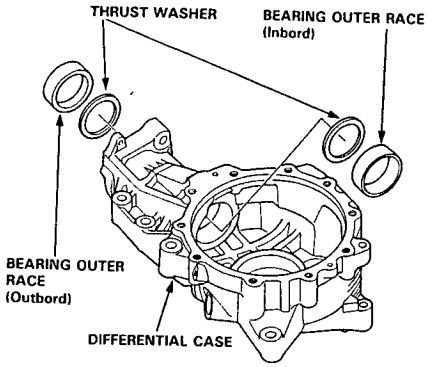

—1. First install the outbord bearing outer race.

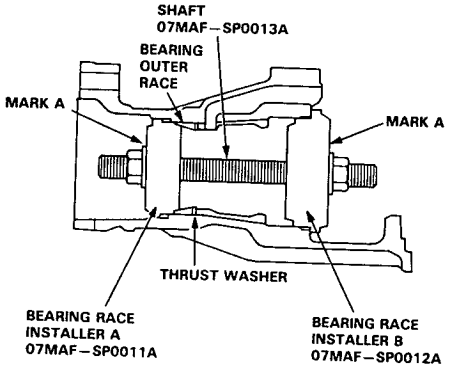

—2. Next install the inbord bearing outer race.

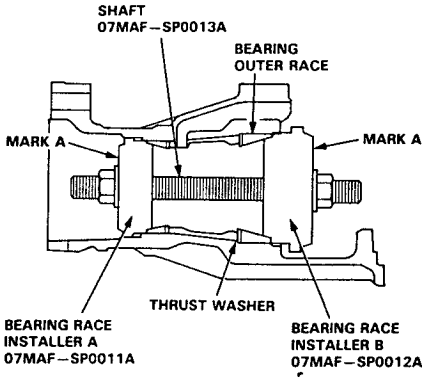

3. Install the 75 mm thrust shim(s) and bearing outer race using the special tools as shown.

   NOTE: Install the 75 mm thrust shim that was removed.

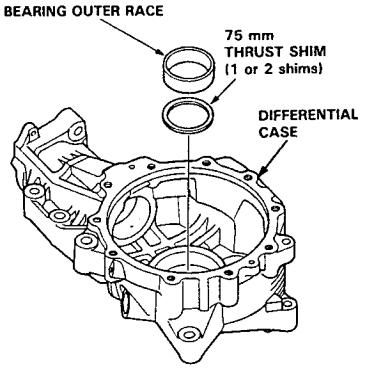

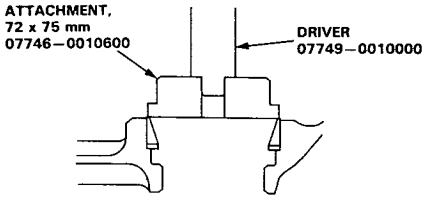

4. Install the 75 mm thrust shim(s) and bearing outer race using the special tools as shown.

   NOTE: Install the 75 mm thrust shim that was removed.

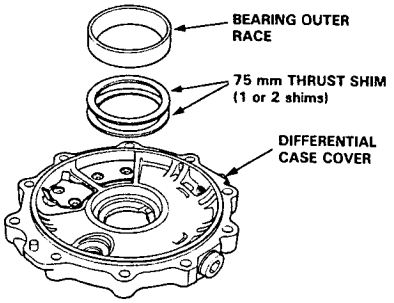

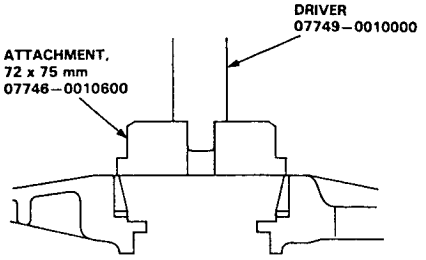

(cont'd)

Differential Assembly

Reassembly (cont'd)

5. Apply lubricant to the tapered roller bearing, then install the drive pinion into the differential case as shown.

   NOTE: Do not install the pinion spacer and thrust washers at this time.

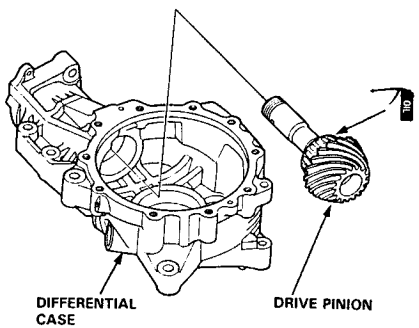

6. Apply lubricant to the tapered roller bearing, then install it using the special tool by holding the drive pinion as shown.

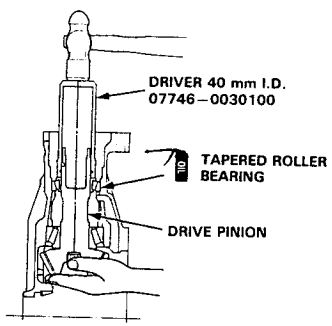

7. Install the pinion collar pin, then install the pinion collar by aliging the pinion collar pin with the groove in the pinion collar. Install the spring washer and a new locknut.

   NOTE:
   - The locknut has left-hand threads.
   - Apply a sufficient amount of lubricant (gear oil and molybdenum disulfide in a mixing ratio of 5 : 1) to the locknut and the threaded part of the shaft.

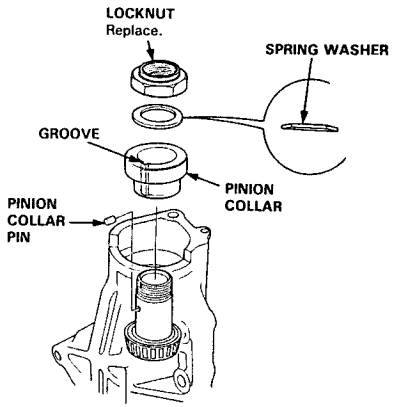

8. Hold the drive pinion using a 17 mm hex wrench as shown, and carefully tighten the pinion locknut until there is no play in the drive pinion.

   Torque: 20 N·m (2.0 kg-m, 14 lb-ft)

   CAUTION: To avoid damaging the tapered roller bearing, do not overtighten the locknut.

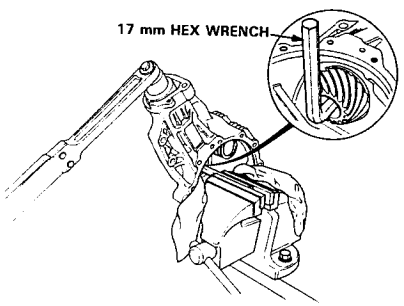

9. Clean and paint the ring gear teeth lightly and evenly with Prussian Blue (on both sides of each tooth).

10. Apply lubricant to the tapered roller bearings, install the differential carrier into the differential case, and install the differential case cover.

11. Install the bolts and tighten in a crisscross pattern, in sevaral steps.

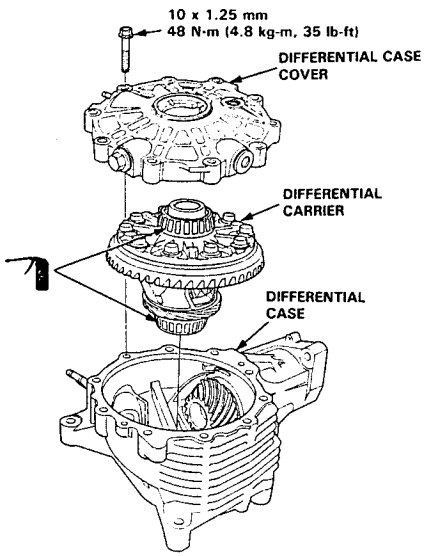

12. Install the special tool as shown.
    Rotate the ring gear one full turn in both directions while applying resistance to the drive pinion.

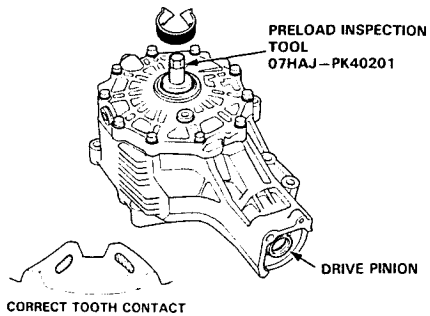

13. Remove the differential case cover, and check the tooth contact pattern (heel and toe). Adjust the ring gear tooth contact as needed (see page 15-26).

14. After adjusting the ring gear tooth contact, remove the drive pinion, and install a new pinion spacer and thrust washers on the drive pinion.

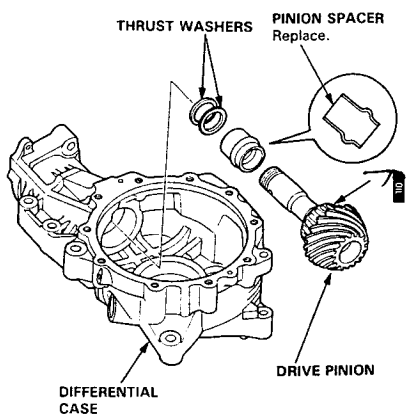

(cont'd)

Reassembly (cont'd)

15. Apply lubricant to the tapered roller bearing, then install it using the special tool while holding the drive pinion as shown.

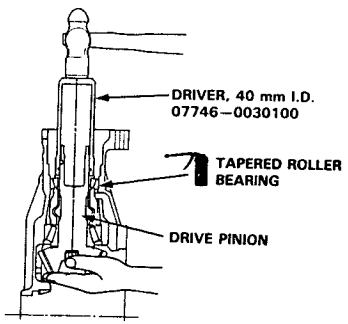

16. Install a new oil seal using the special tools as shown.

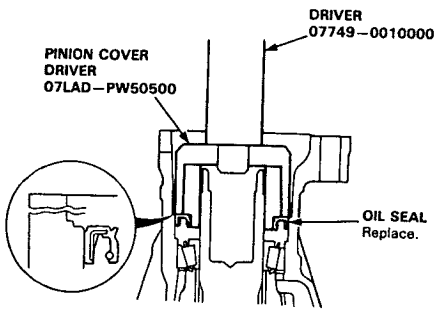

17. Install the pinion collar pin, then install the pinion collar by aliging the pinion collar pin with the groove in the pinion collar. Install the spring washer and a new locknut.

NOTE: The locknut have left-hand threads.

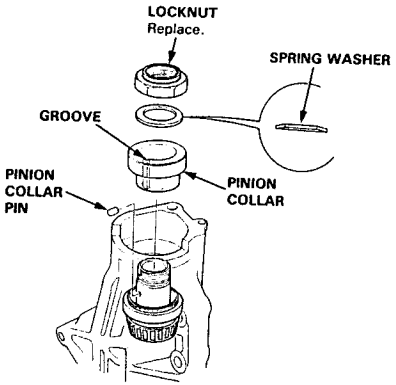

18. Hold the drive pinion using a 17 mm hex wrench as shown.

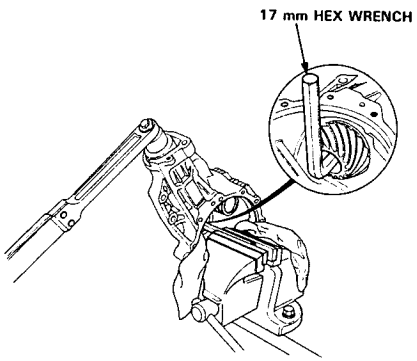

19. Tighten the locknut to 260 N·m (26 kg-m, 188 lb-ft), and measure the tapered roller bearing preload.

NOTE: Rotate the drive pinion several times to ensure proper tapered roller bearing contact.

Standard:

New Bearing: 1.3–1.7 N·m
(13–17 kg-cm, 11.3–14.8 lb-in)
Reused Bearing: 0.65–1.05 N·m
(6.5–10.5 kg-cm, 5.6–9.1 lb-in)

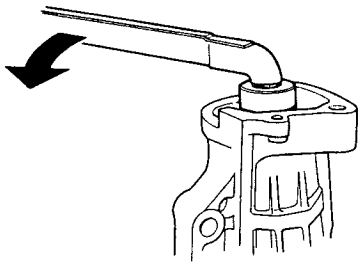

If the tapered roller bearing preload exceeds the standard, replace the pinion spacer.

If the tapered roller bearing preload is less than the standard, adjust by tightening the locknut a little at a time, but keep the torque within 260–330 N·m (26–33 kg-m, 188–239 lb-ft). If this is not possible, replace the pinion spacer.

20. Clean and paint the ring gear teeth lightly and evenly with Prussian Blue (on both sides of each tooth).

21. Install the differential carrier into the differential case, and reinstall the differential case cover.

22. Install the bolts and tighten in a crisscross pattern in several steps.

Torque: 48 N·m (4.8 kg-cm, 35 lb-ft)

23. Install the special tool as shown.
Rotate the ring gear one full turn in both directions while applying resistance to the drive pinion.

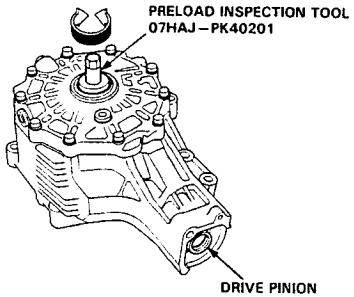

24. Remove the special tool, and use a dial-type torque wrench on the pinion shaft to check total bearing preload.

NOTE: Rotate the drive pinion several times to ensure proper bearing contact.

Standard:
New bearings:
2.58–3.30 N·m
(25.8–33.0 kg-cm, 22.4–28.6 lb-in)
Reused bearings:
1.56–2.20 N·m
(15.6–22.0 kg-cm, 13.5–19.1 lb-in)
Replaced only the bearing on the ring gear side:
1.93–2.65 N·m
(19.3–26.5 kg-cm, 16.8–23.0 lb-in)
Replaced only the bearing on the drive pinion side:
2.21–2.85 N·m
(22.1–28.5 kg-cm, 19.2–24.7 lb-in)

If the total preload is not within the standard, correct it by increasing or decreasing the preload on the carrier bearings as needed. If there is too much preload, decrease the shim thickness equal amounts on both sides. If there is not enough preload, increase the shim thickness equal amounts on both sides.

NOTE: Be sure the same amount of shim thickness is added or subtracted from both sides, so that the backlash and tooth contact pattern are not affected.

(cont'd)

Differential Assembly

Reassembly (cont'd)

25. Secure the differential assembly in a vise using soft jaws.

26. Align a differential carrier rib with the 20 mm plug hole, and install the special tools as shown.

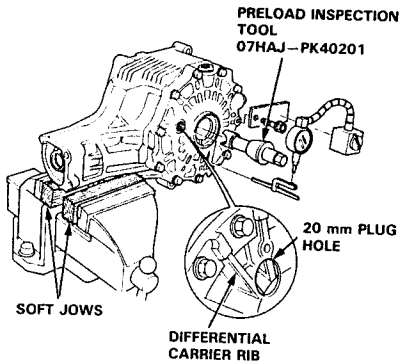

27. Measure backlash in 3–4 places on the differential carrier using the special tools as shown.

Standard: 0.04–0.10 mm (0.002–0.004 in)

The difference among the 3–4 measurements taken, must not exceed 0.04 mm (0.002 in).

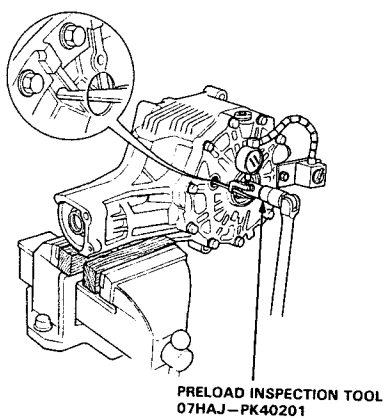

28. If the backlash is less then the standard, adjust the ring gear backlash (see page 15-26).

29. Remove the differential case cover, and check the tooth contact pattern (face and flank). If the tooth contact is not correct, adjust ring gear tooth contact (see page 15-26).

30. After all adjustments are made, install the oil collect plate and the breather chamber plate, then stake the screw heads in the groove as shown.

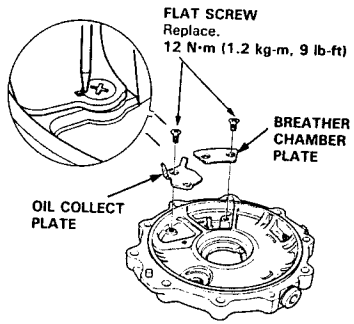

31. Apply liquid gasket to the mating surface of the differential case.

NOTE:
- Use liquid gasket (P/N 08718–0001).
- Remove the dirt and oil from the sealing surface.
- If 20 minutes have passed after applying liquid gasket, reapply it and assemble the housings, and allow it to cure at least 30 minutes after assembly before filling the transmission with oil.

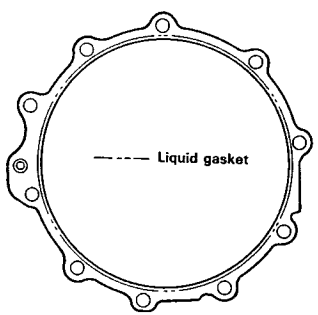

32. Install the differential case cover.

NOTE: Torque the bolts in a crisscross pattern, in several steps.

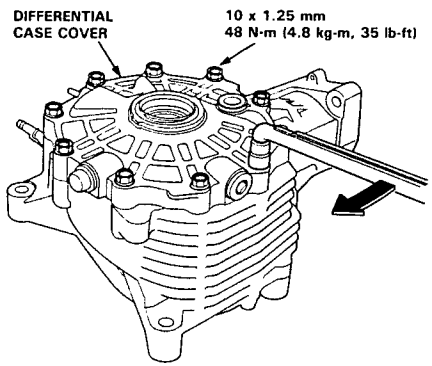

33. Install the oil seal using the special tools as shown.

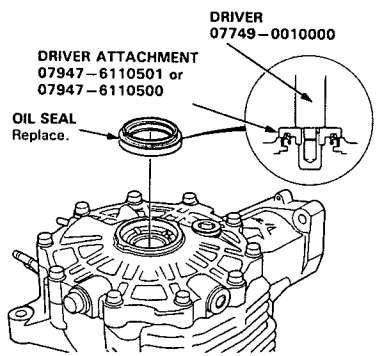

34. Install the O-ring and the oil cooler.

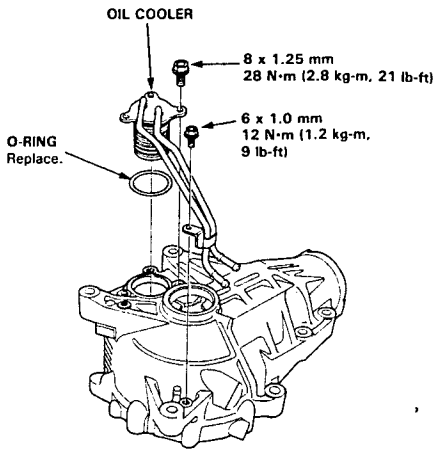

35. Stake the locknut tab into the groove.

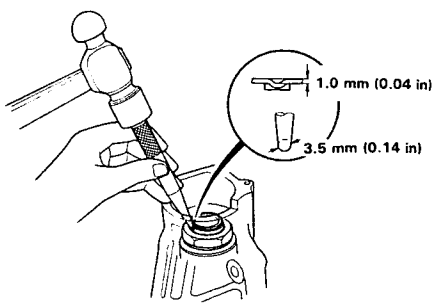

(cont'd)

Differential Assembly

Reassembly (cont'd)

36. Install the pinion cover oil seal using the special tools as shown.

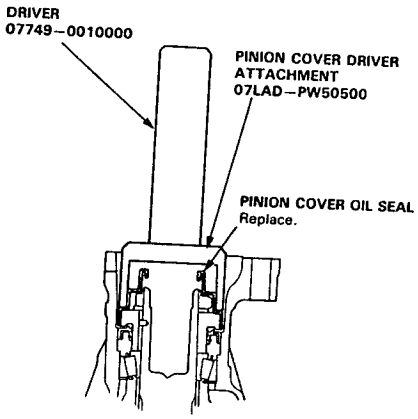

Drive Pinion

Height Adjustment

NOTE: If the drive pinion and ring gear are replaced (always as a set), height has to be adjusted.

Select the proper 40 mm thrust shim as follows:

First, calculate the difference in size between the old shim and the new drive pinion.

The last one of the numbers (see ill.) on each drive pinion is the plus (+) or minus (–) tolerance in thousandths of a millimeter. So, a drive pinion with +20 is 0.02 mm large and a drive pinion with –20 is 0.02 mm small.

1. If the number on the old drive pinion is a plus (+), add it to the old shim thickness.
   If it is a minus (–), subtract it from the old shim thickness.
2. If the number on the new drive pinion is a plus (+), subtract it from the number you got in step 1. If it is a minus (–), add it to the step 1 number.
3. Select the shim that is closest (but not more than) the final number you got from steps 1 and 2.

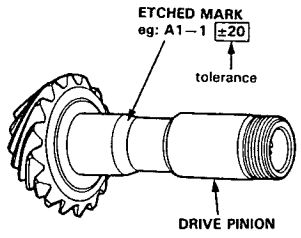

Example 1:
Old shim: 1.30 mm thickness
Old pinion: +20 (0.02 mm)
New pinion: –20 (–0.02 mm)

1.30 + 0.02 + 0.02 = 1.34

Select the 1.33 mm (0.0524 in) new shim.

Example 2:
Old shim: 1.30 mm thickness
Old drive pinion: +20 (0.02 mm)
New drive pinion: +40 (0.04 mm)

1.30 + 0.02 – 0.04 = 1.28

Select the 1.27 mm (0.0500 in) new shim.

40 mm THRUST SHIM

	Part Number	Thickness
A	41381–PW5–000	1.18 mm (0.0465 in)
B	41382–PW5–000	1.21 mm (0.0476 in)
C	41383–PW5–000	1.24 mm (0.0488 in)
D	41384–PW5–000	1.27 mm (0.0500 in)
E	41385–PW5–000	1.30 mm (0.0512 in)
F	41386–PW5–000	1.33 mm (0.0524 in)
G	41387–PW5–000	1.36 mm (0.0535 in)
H	41388–PW5–000	1.39 mm (0.0547 in)
I	41389–PW5–000	1.42 mm (0.0559 in)
J	41390–PW5–000	1.45 mm (0.0571 in)
K	41391–PW5–000	1.48 mm (0.0583 in)
L	41392–PW5–000	1.51 mm (0.0594 in)
M	41393–PW5–000	1.54 mm (0.0606 in)
N	41394–PW5–000	1.57 mm (0.0618 in)
O	41395–PW5–000	1.60 mm (0.0630 in)
P	41396–PW5–000	1.63 mm (0.0642 in)

Ring Gear Tooth Contact

Adjustment

1) CORRECT TOOTH CONTACT

2) TOE CONTACT
- Use a thinner drive pinion shim (40 mm thrust shim) to move the drive pinion away from the ring gear.

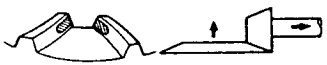

3) HEEL CONTACT
- Use a thicker drive pinion shim (40 mm thrust shim) to move the drive pinion toward the ring gear.

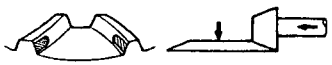

4) FLANK CONTACT
- Use a thicker side bearing shim (75 mm thrust shim) on the drive pinion side and a thinner one on the ring gear side to move the ring gear away from the drive pinion.

NOTE: Recheck backlash after replacing the side bearing shims. If out of specification, adjust as described under TOE CONTACT.

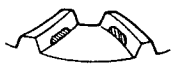

5) FACE CONTACT
- Use a thinner side bearing shim (75 mm thrust shim) on the drive pinion side and a thicker one on the ring gear side to move the ring gear from the drive pinion.

NOTE: Recheck backlash after replacing the side bearing shims. If out of specification, adjust as described under HEEL CONTACT.

Ring Gear Backlash

Adjustment

1. If the backlash exceeds the standard, correct by decreasing the shim thickness on one side and increasing the thickness of the other shim the same amount.

   NOTE:
   - The total thickness of both shims must still equal the total thickness of the original shims.
   - If there is too much backlash, move the ring gear toward the drive pinion. If there is not enough backlash, move the ring gear away from the drive pinion.

2. After adjustment, recheck backlash (see page, 15-22).

Standard: 0.04–0.10 mm (0.002–0.004 in)

75 mm THRUST SHIM

	Part Number	Thickness
A	41401–PW8–010	0.66 mm (0.0260 in)
B	41402–PW8–010	1.67 mm (0.0657 in)
C	41403–PW8–010	1.70 mm (0.0669 in)
D	41404–PW8–010	1.73 mm (0.0681 in)
E	41405–PW8–010	1.76 mm (0.0693 in)
F	41406–PW8–010	1.79 mm (0.0705 in)
G	41407–PW8–010	1.82 mm (0.0717 in)
H	41408–PW8–010	1.85 mm (0.0728 in)
I	41409–PW8–010	1.88 mm (0.0740 in)
J	41410–PW8–010	1.91 mm (0.0752 in)
K	41411–PW8–010	1.94 mm (0.0764 in)
L	41412–PW8–010	1.97 mm (0.0776 in)
M	41413–PW8–010	2.00 mm (0.0787 in)
N	41414–PW8–010	2.03 mm (0.0799 in)
O	41415–PW8–010	2.06 mm (0.0811 in)
P	41416–PW8–010	2.09 mm (0.0823 in)
Q	41417–PW8–010	2.12 mm (0.0835 in)
R	41418–PW8–010	2.15 mm (0.0846 in)
S	41419–PW8–010	2.18 mm (0.0858 in)
T	41420–PW8–010	2.21 mm (0.0870 in)
U	41421–PW8–010	2.24 mm (0.0882 in)
V	41422–PW8–010	2.27 mm (0.0894 in)
W	41423–PW8–010	2.30 mm (0.0906 in)
X	41424–PW8–010	2.33 mm (0.0917 in)
Y	41425–PW8–010	2.36 mm (0.0929 in)
Z	41426–PW8–010	2.39 mm (0.0941 in)

Differential Assembly

Installation

NOTE: If the differential carrier is replaced, the 26 mm shim must be adjusted.

–1. Install the differential assembly.

–2. Measure the clearance between the differential case and the clutch housing.

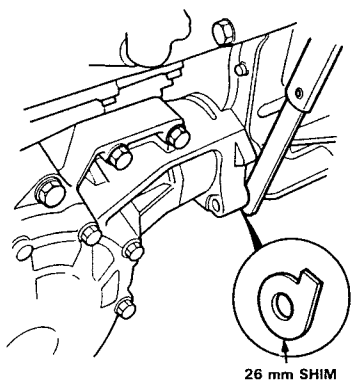

–3. Select the shim from the following table.

26 mm SHIM

Part Number	Thickness	Measurement Value
41432–PY4–000	1.9 mm (0.0748 in)	1.99–1.9 mm
41433–PY4–000	2.0 mm (0.0787 in)	2.09–2.0 mm
41434–PY4–000	2.1 mm (0.0827 in)	2.19–2.1 mm
41435–PY4–000	2.2 mm (0.0866 in)	2.29–2.2 mm
41436–PY4–000	2.3 mm (0.0906 in)	2.39–2.3 mm
41437–PY4–000	2.4 mm (0.0945 in)	2.49–2.4 mm
41438–PY4–000	2.5 mm (0.0984 in)	2.59–2.5 mm
41439–PY4–000	2.6 mm (0.1024 in)	2.69–2.6 mm
41440–PY4–000	2.7 mm (0.1063 in)	2.79–2.7 mm
41441–PY4–000	2.8 mm (0.1102 in)	2.89–2.8 mm
41442–PY4–000	2.9 mm (0.1142 in)	2.99–2.9 mm
41443–PY4–000	3.0 mm (0.1181 in)	3.09–3.0 mm

1. Fill the extension shaft with Super High Temp Urea Grease (P/N 08798–9002).

2. Fill the drive pinion with Super High Temp Urea Grease (P/N 08798–9002).

   If the pinion collar oil seal is replaced:
   Ⓐ: 19–20 g (0.67–0.71 oz)
   If the pinion collar oil seal is not replaced:
   Ⓐ: 3.5–4.5 g (0.12–0.16 oz)

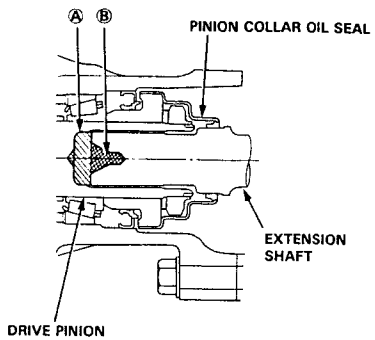

3. Install the dowel pins and the differential assembly.

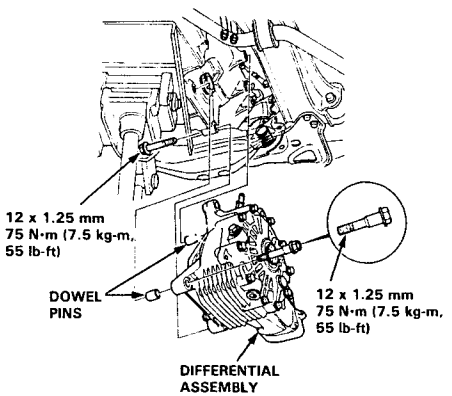

(cont'd)

Differential Assembly

Installation (cont'd)

4. Install the mounting bolts and the 26 mm shim.

Torque:
12 x 1.25 mm
75 N·m (7.5 kg-m, 55 lb-ft)

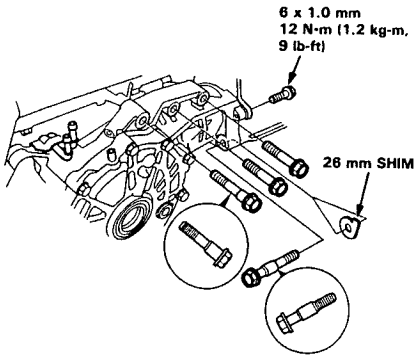

5. Install the vehicle speed sensor (VSS)/power steering speed sensor, then connect the oil cooler hoses and the breather tube.

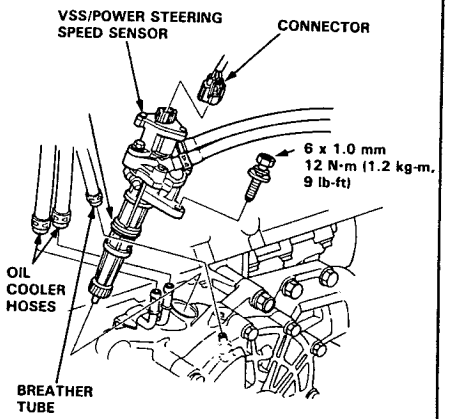

6. Install the left front engine mount bracket, the front stopper insulator rubber, and the front stopper bracket A.

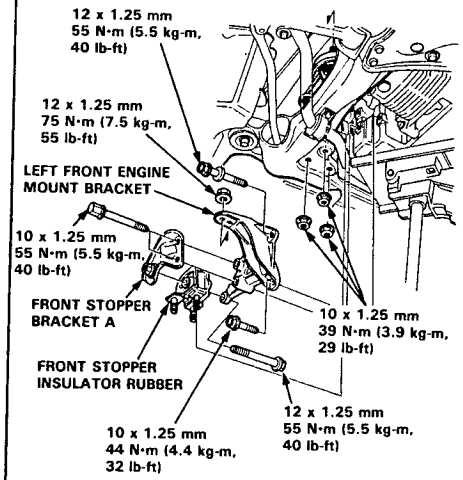

7. Install the splash guard.

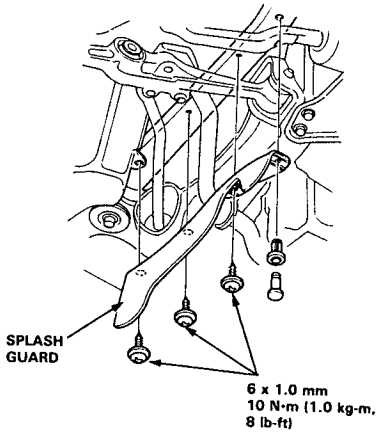

8. Install the set ring and the extension shaft, and apply Super High Temp Urea Grease (P/N 08798–9002) to the extension shaft spline.

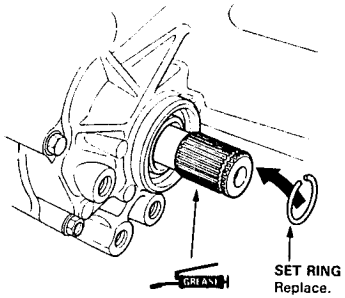

9. Install the 33 mm sealing bolt and the secondary cover.

NOTE:
- Shift to 1st gear (M/T) or P position (A/T) to lock the secondary gear.
- Apply liquid gasket (P/N 08718–0001) to the threads.
- Turn the secondary cover so the finger is facing down.

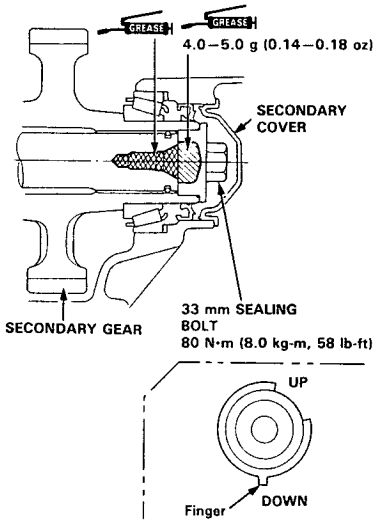

10. Install the transmission mount bracket and the transmission mount beam.

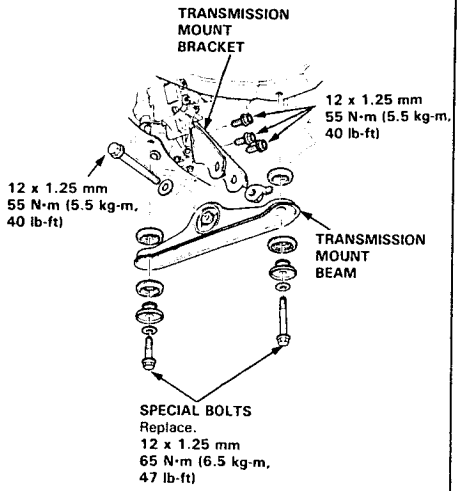

11. Install the driveshafts and the intermediate shaft (see section 16).

12. Refill the differential with oil (see page 15-4).

13. Refill the coolant (see section 10).

14. Install the air cleaner assembly.

15. Connect the battery positive (+) and negative (–) cables to the battery.

16. Check the clutch operation.

17. Shift the transmission, and check for smooth operation.

18. After service, reconnect power to the radio and turn it on.
When the word "CODE" is displayed, enter the customer's 5-digit code to restore radio operation.

Driveshafts

Special Tools 16-2

Driveshafts

- Removal/Installation 16-3
- Disassembly 16-5
- Disassembly/Inspection 16-6
- Reassembly 16-7

Intermediate Shaft

- Removal/Installation 16-10
- Disassembly 16-10
- Disassembly/Inspection 16-12
- Reassembly 16-13

Special Tools

Ref. No.	Tool Number	Description	Qty	Page Reference
①	07GAF–SD40700	Hub Dis/Assembly Base	2	16-10, 11, 13, 14
②	07MAC–SL00100	Ball Joint Remover, 32 mm	1	16-3
③	07MAD–PR90100	Attachment, 45 x 55 mm I.D.	1	16-14
④	07746–0010300	Attachment, 42 x 47 mm	1	16-11
⑤	07746–0030400	Attachment, 35 mm I.D.	1	16-13
⑥	07749–0010000	Driver	1	16-11, 13, 14
⑦	07947–SD90101	Seal Driver Attachment	1	16-13
⑧	07965–SD90200	Support Collar	1	16-13

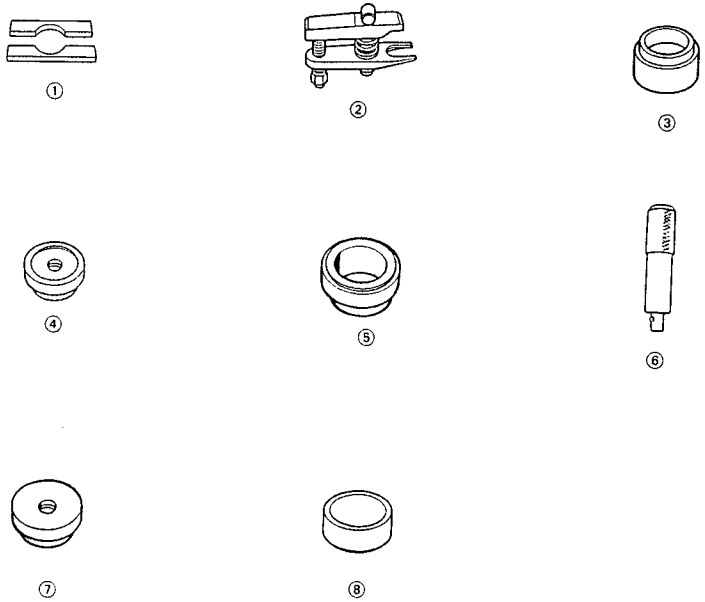

Driveshafts

Removal/Installation

INSPECTION

Driveshaft Boot
Check the boots on the driveshaft for cracks, damage, leaking grease or loose boot bands.
If any damage is found, replace the boot.

Spline Looseness
Turn the driveshaft by hand and make sure the spline and joint are not excessively loose.
If damage is found, replace the inboard joint.

Twisted or Cracked
Make sure the driveshaft is not twisted or cracked.
Replace if necessary.

1. Raise the car, and place safety stands in the proper locations (see section 1).
2. Remove the front wheels.

   NOTE: Before installing the wheel, clean the mating surfaces of the brake disc and inside of the wheel.

3. Drain the oil from the differential (see page 15-4).

   NOTE: It is not necessary to drain the differential oil when only the right driveshaft is removed.

4. Raise the locking tab on the spindle nut, and loosen the spindle nut.

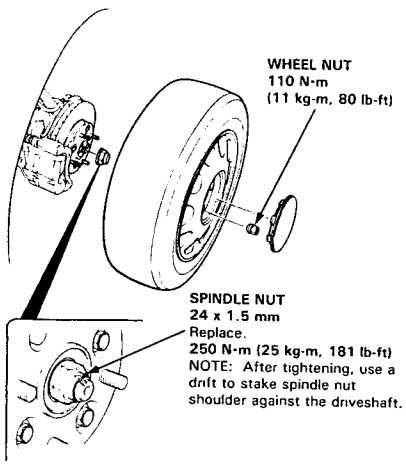

5. Remove the damper fork nut, bolt and damper pinch bolt.
6. Remove the damper fork.

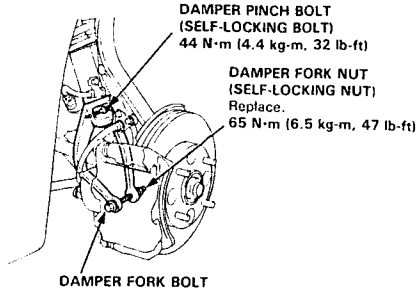

7. Remove the cotter pin from the lower arm ball joint castle nut, and remove the nut.
8. Install a 14 mm hex nut on the ball joint. Be sure that the 14 mm hex nut is flush with the ball joint pin end, or the threaded section of the ball joint pin might be damaged by the ball joint remover.
9. Use the ball joint remover, 32 mm, as shown on page 18-10, to separate the ball joint and lower arm.
10. Position the special tool between the knuckle and lower arm as shown, then separate the lower arm.

CAUTION:
- **Be careful not to damage the ball joint boot.**
- **Torque the castle nut to the lower torque specification, then tighten it only far enough to align the slot with the pin hole. Do not align the nut by loosening.**

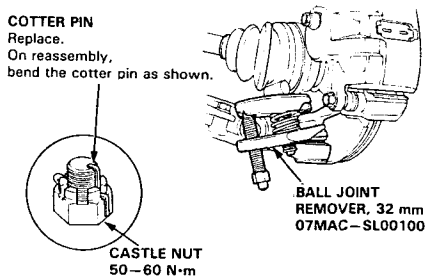

(cont'd)

Driveshafts

Removal (cont'd)

11. Pry the left driveshaft assembly with a screwdriver as shown to force the set ring at the driveshaft end past the groove.

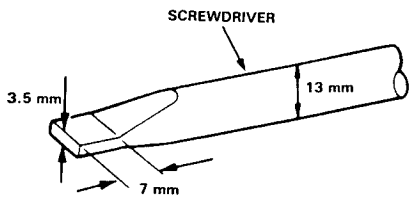

12. Pull the inboard joint and remove the left driveshaft and CV joint from the differential case as an assembly.

    CAUTION:
    - **Do not pull on the driveshaft, as the CV joint may come apart.**
    - **Use care when prying out the assembly and pull it straight to avoid damaging the differential oil seal.**

Left Driveshaft:

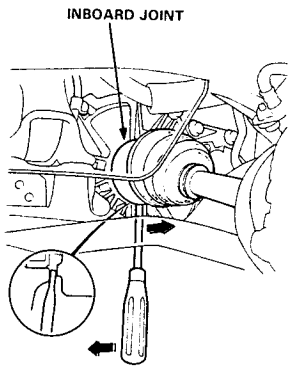

13. Remove the right driveshaft from the bearing support by tapping the inboard joint of the driveshaft with a plastic hammer.

    CAUTION:
    - **Do not pull on the driveshaft, as the CV joint may come apart.**
    - **Use care when prying out the assembly and pull it straight to avoid damaging the intermediate shaft dust seal.**

Right Driveshaft:

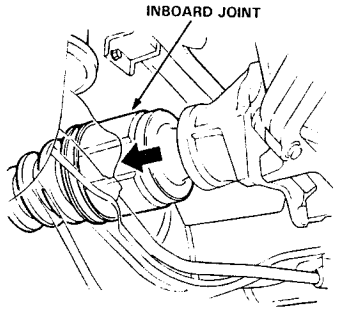

14. Remove the spindle nut.

15. Pull the knuckle outward and remove the driveshaft outboard joint from the front wheel hub using a plastic hammer.

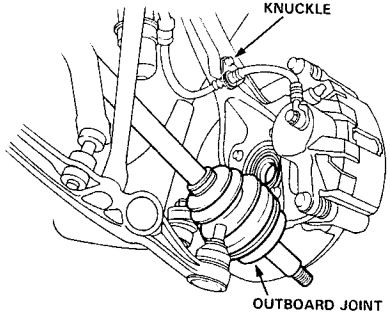

16. Install the driveshafts in the reverse order of removal.

17. After installing the driveshafts, adjust the wheel alignment (see section 18).

Disassembly

1. To remove the boot band, pry up the locking tabs with a screwdriver, and raise the end of the band.

   CAUTION: Take care not to damage the boots.

   NOTE: Carefully clamp the dirveshaft in a vise with soft jaws.

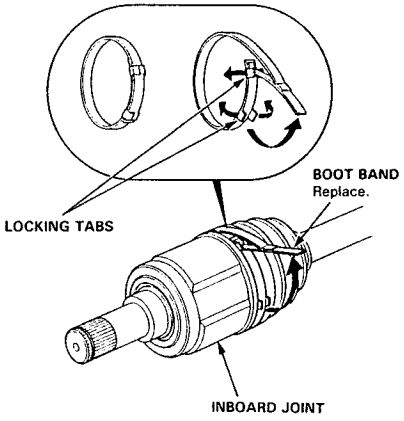

2. Remove the inboard joint and rollers.

3. Remove the stopper ring, then remove the spider using a commercially available bearing remover.

   NOTE: Before disassembly, mark the spider and driveshaft so they can be reinstalled in their original positions.

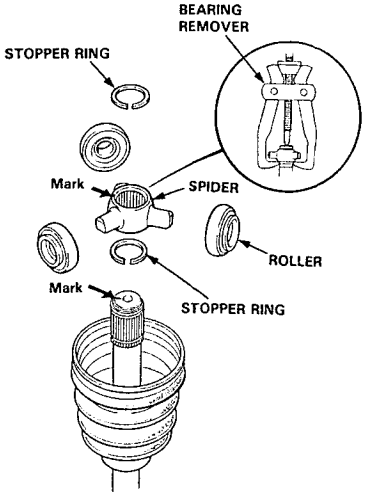

Driveshafts

Disassembly/Inspection

NOTE:
- Mark the rollers and roller grooves during disassembly to ensure proper positioning during reassembly.
- Before disassembly, mark the spider and driveshaft so they can be reinstalled in their original positions.
- The inboard joint must be removed to replace the boots.
- If the boot band is the welded type, cut off as shown.

GREASE : Thoroughly pack the inboard joint and both joint boots with joint grease included in the new driveshaft set.

Grease Quantity:

Inboard Joint	100–110 g (3.5–3.9 oz)
Outboard Joint	130–140 g (4.6–4.9 oz)

CAUTION: Take care not to damage the boots.

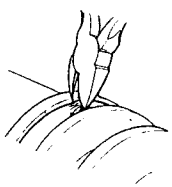

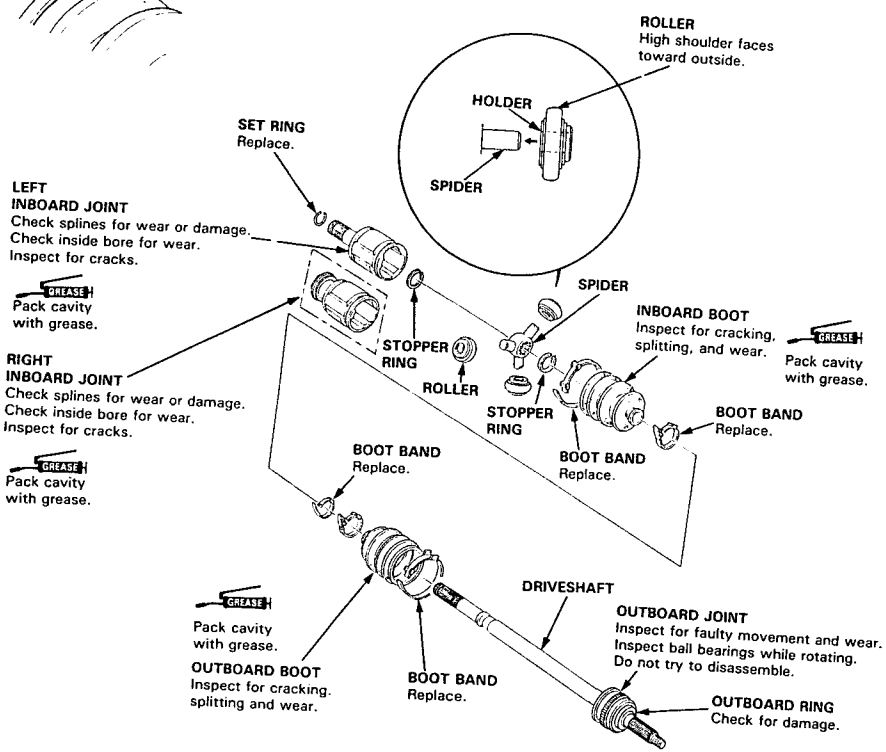

Reassembly

1. Wrap the splines with vinyl tape to prevent damage to the boots.
2. Install the outboard boot and inboard boot to the driveshaft, then remove the vinyl tape.

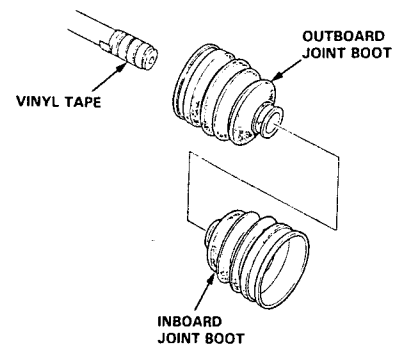

3. Install the stopper ring onto the driveshaft groove.
4. Install the spider on the driveshaft by aligning the marks on the spider and end of the driveshaft.
5. Fit the stopper ring onto the driveshaft groove.

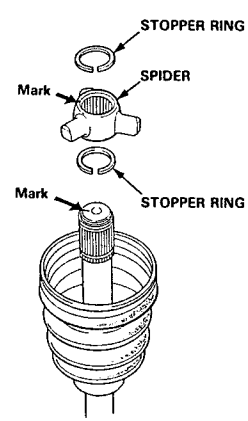

6. Fit the rollers to the spider with their high shoulders facing outward.

CAUTION:
- **Reinstall the rollers to their original positions on the spider.**
- **To prevent the rollers from falling off, hold the driveshaft assembly so the spider and the rollers point up.**

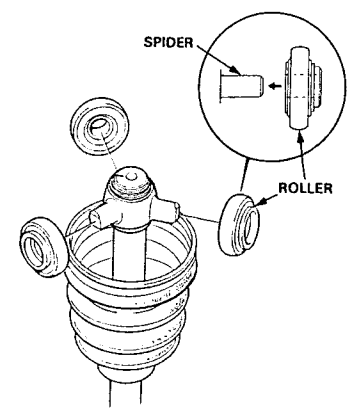

7. Pack the inboard joint with the joint grease included in the new driveshaft set.

   Grease Quantity: 100–110 g (3.5–3.9 oz)

8. Fit the inboard joint onto the driveshaft.

   CAUTION: To prevent it from falling off, hold the driveshaft assembly so the inboard joint points up.

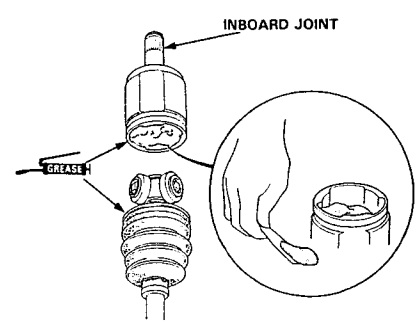

(cont'd)

Reassembly (cont'd)

9. Pack the outboard joint with the joint grease included in the new driveshaft set.

   Grease Quantity: 130–140 g (4.6–4.9 oz)

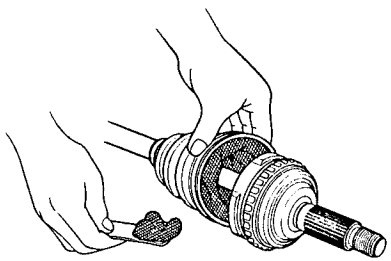

10. Adjust the length of the driveshafts to the figure below, then adjust the boots to halfway between full compression and extension.

    NOTE: The ends of boots seat in the groove of the driveshaft and joint.

Right Driveshaft:

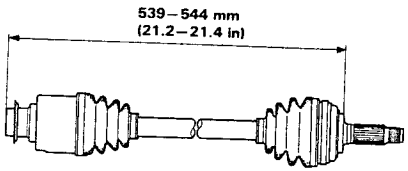

Left Driveshaft:

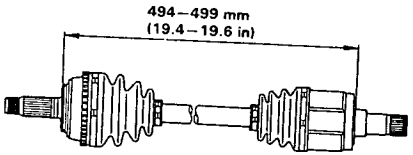

11. Install new boot bands on the boots, and bend both sets of locking tabs.

12. Lightly tap on the doubled-over portions to reduce their height.

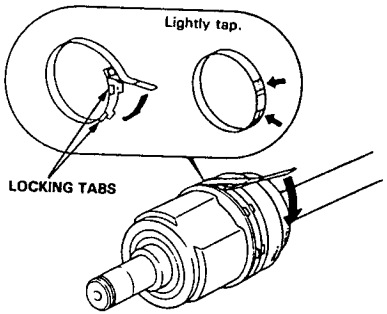

NOTE: Install the outboard joint in the knuckle before installing the driveshaft into the differential or intermediate shaft. Loosely install the spindle nut at this time.

13. Install the new set rings in the left driveshaft groove and the intermediate shaft groove.

14. Install the inboard end of the driveshaft into the differential or the intermediate shaft.

CAUTION: Always use a new set ring whenever the driveshaft is being installed.

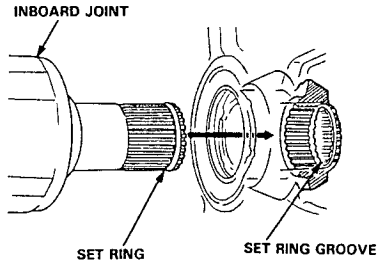

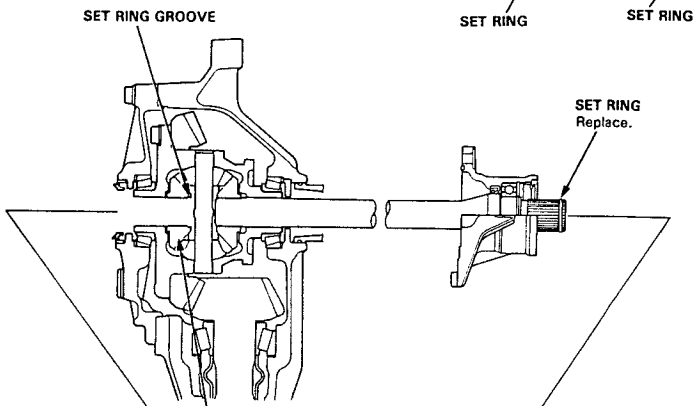

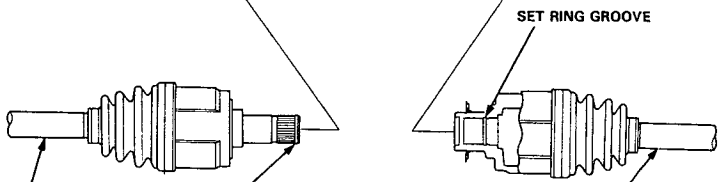

Left Driveshaft

SET RING
Replace.
Make sure the left driveshaft locks in the differential side gear groove, and the CV joint sub-axle bottoms in the differential.

Right Driveshaft
Insert the right driveshaft CV joint sub-axle into the intermediate shaft until the intermediate shaft set ring locks in the groove in the right driveshaft.

Intermediate Shaft

Removal/Installation

1. Remove the left driveshaft assembly (see page 16-3).

2. Remove the three bolts.

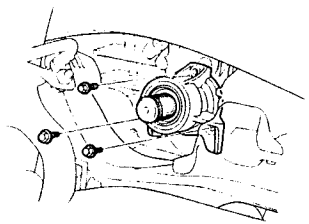

3. Remove the intermediate shaft assembly from the oil pan.

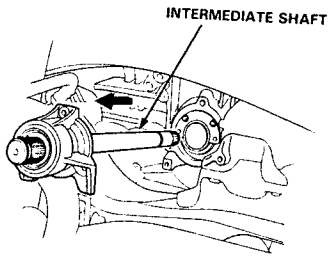

4. Install the intermediate shaft in the reverse order of removal.

CAUTION: When installing, make sure the O-ring is in place and not pinched.

NOTE: Apply sealant to the bolt threads, and tighten the bolts to the specified torque.

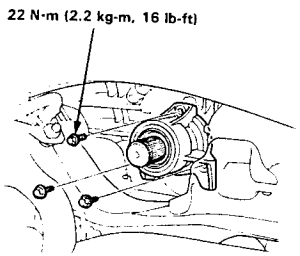

Disassembly

CAUTION: The bearing support and support base are made of aluminum, Be careful not to damage them when servicing.

1. Remove the intermediate shaft outer seal from the bearing support.

2. Remove the external circlip and the O-ring.

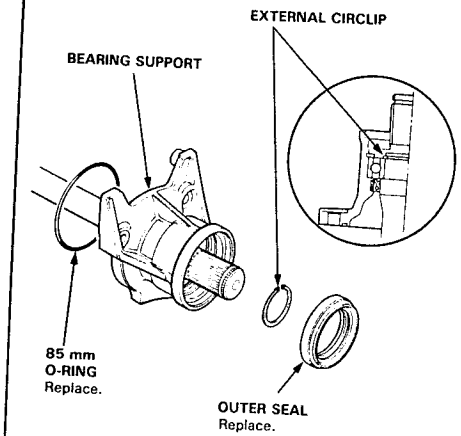

3. Press the intermediate shaft out ot fhe shaft bearing using the special tool and a press.

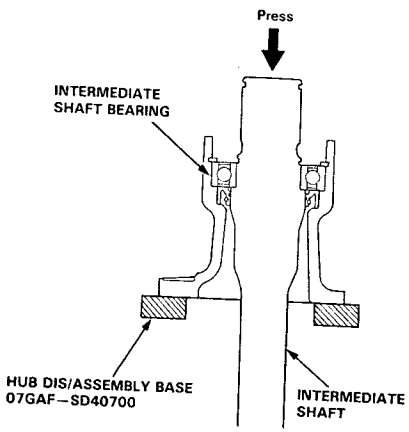

4. Remove the internal circlip.

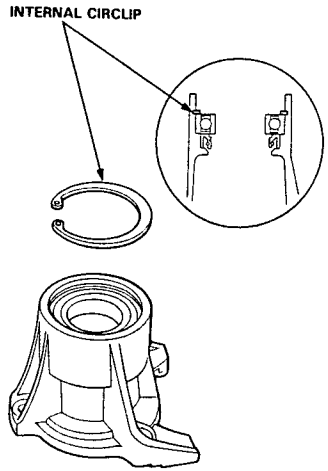

5. Press the intermediate shaft bearing out of the bearing support using the special tools and a press.

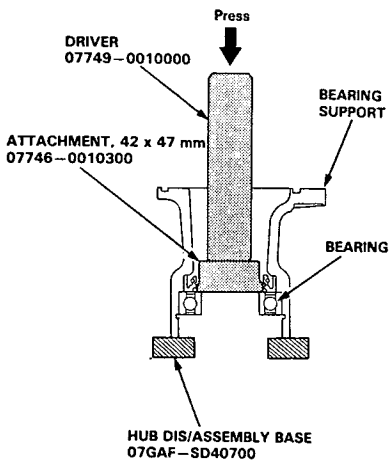

6. Remove the intermediate shaft inner seal from the bearing support.

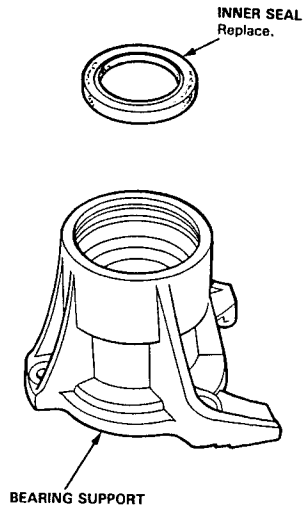

Intermediate Shaft

Disassembly/Inspection

CAUTION:
- **The bearing support is made of aluminum. Be careful not to damage it when servicing.**
- **Do not damage the lip on inner and outer seals during installation.**

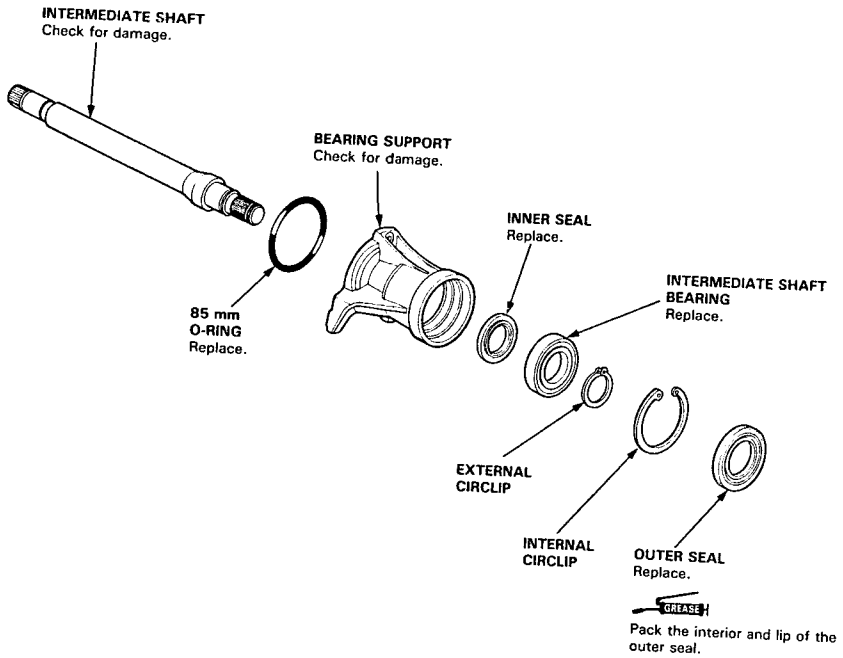

Reassembly

1. Press the intermediate shaft inner seal into the bearing support using the special tools and a press.

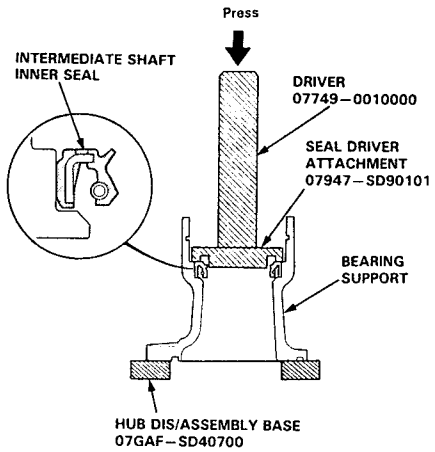

2. Press the intermediate shaft bearing into the bearing support using the special tools and a press.

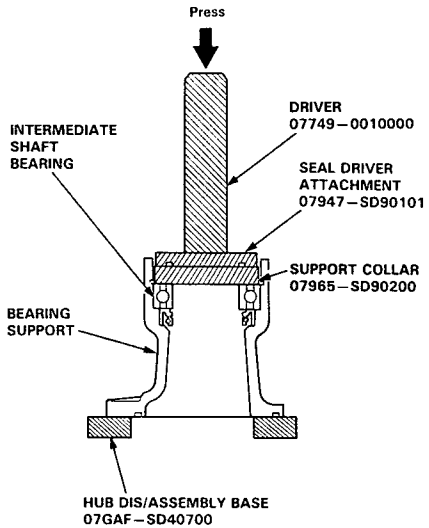

3. Seat the internal circlip in the groove of the bearing support.

CAUTION: Install the circlip with the tapered end facing out.

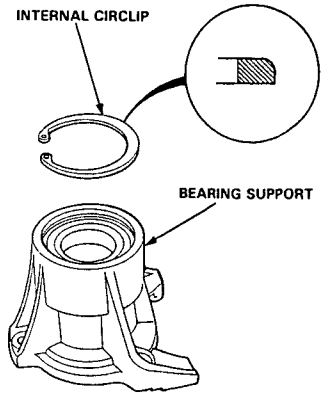

4. Press the intermediate shaft into the shaft bearing using the special tools and a press.

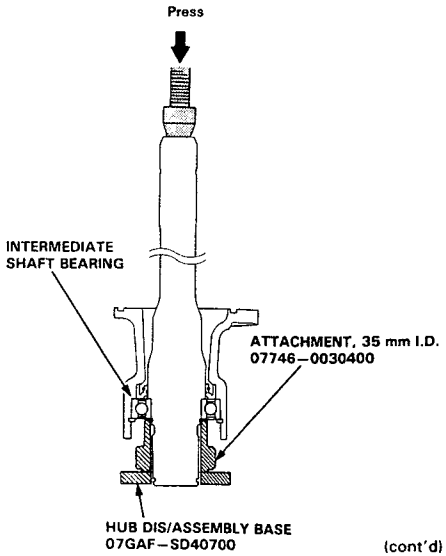

(cont'd)

Intermediate Shaft

Reassembly (cont'd)

5. Seat the external circlip in the groove of the intermediate shaft.

   CAUTION: Install the circlip with the tapered end facing out.

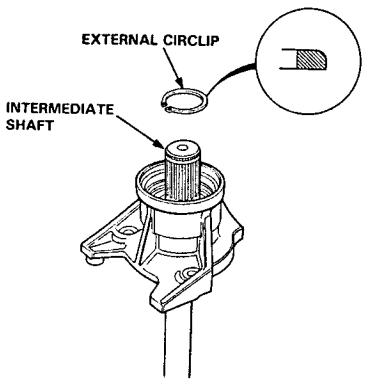

6. Press the outer seal into the bearing support using the special tools and a press.

   NOTE: Press the seal flush with the bearing support.

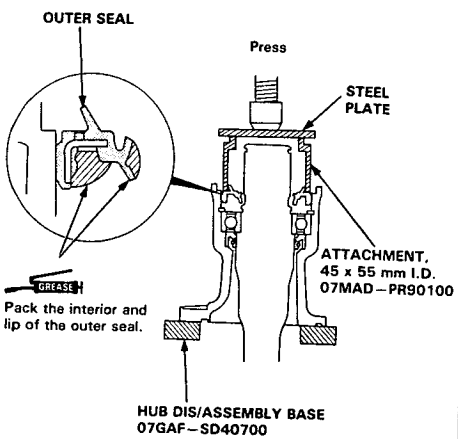

7. Seat the 85 mm O-ring in the groove of the bearing support.

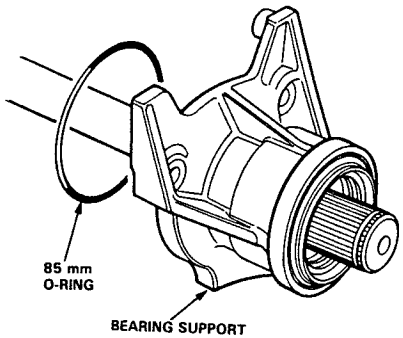

Steering

Special Tools 17-2
Component Location
Illustrated Index 17-3
System Description
Fluid Flow Diagram 17-4
Steering Pump 17-5
Fluid Reservoir/Filter 17-6
4-way Valve 17-7
Full-lock Unloader System 17-9
Power Steering Speed Sensor 17-9
Troubleshooting
General Troubleshooting 17-12
Noise and Vibration 17-15
Fluid Leaks 17-16
Maintenance
Pump Belt Adjustment 17-17
On-car Checks
Rack Guide Adjustment 17-17
Fluid Replacement 17-18
Pump Pressure Check 17-19
Steering Wheel Rotational Play 17-20
Power Assist Check With Car Parked 17-20
Assist Check at Road Speed 17-21
Power Steering Speed Sensor Replacement 17-21
Steering Wheel
*Removal 17-22
Disassembly/Reassembly 17-24
*Installation 17-25
Steering Column
*Removal 17-27
Inspection 17-29
*Installation 17-30
Steering Pump
Replacement 17-32
Preload Inspection 17-32
Pulley Replacement 17-33
Flow Control Valve Inspection and Replacement 17-33
Housing Disassembly 17-36
Disassembly/Inspection 17-37
Housing Reassembly 17-38
Steering Gearbox
Gearbox Removal 17-40
Gearbox Installation 17-42
Valve Body Unit Overhaul 17-44
Disassembly/Inspection 17-49
Steering Gearbox Overhaul 17-50

SUPPLEMENTAL RESTRAINT SYSTEM (SRS)

The VIGOR SRS includes a driver's side airbag, located in the steering wheel hub. In addition, the GS model has a front passenger's airbag located in the dashboard above the glove box. Information necessary to safely service the SRS is included in this Service Manual. Items marked with an asterisk (*) on the contents page include, or are located near, SRS components. Servicing, disassembling or replacing these items will require special precautions and tools, and should therefore be done by an authorized Acura dealer.

⚠WARNING

- **To avoid rendering the SRS inoperative, which could lead to personal injury or death in the event of a severe frontal collision, all maintenance must be performed by an authorized Acura dealer.**
- **Improper maintenance, including incorrect removal and installation of the SRS, could lead to personal injury caused by unintentional activation of the airbag (s).**
- **All SRS electrical wiring harnesses are covered with yellow outer insulation. Related components are located in the steering column, center console, dash, and dashboard lower panel, and in the dashboard above the glove box. Do not use electrical test equipment on these circuits.**

NOTE: The radio may have a coded theft protection circuit. Be sure to get the customer's code number before
– Disconnecting the battery.
– Removing the No. 39 (10 A) fuse in the under-hood fuse/relay box.
– Removing the radio.
After service, reconnect power to the radio and turn it on. When the word "CODE" is displayed, enter the customer's 5 digit code to restore radio operation.

Steering

Special Tools 17-2
Component Location
Illustrated Index 17-3
System Description
Fluid Flow Diagram 17-4
Steering Pump 17-5
Fluid Reservoir/Filter 17-6
4-way Valve 17-7
Full-lock Unloader System 17-9
Power Steering Speed Sensor 17-9
Troubleshooting
General Troubleshooting 17-12
Noise and Vibration 17-15
Fluid Leaks 17-16
Maintenance
Pump Belt Adjustment 17-17
On-car Checks
Rack Guide Adjustment 17-17
Fluid Replacement 17-18
Pump Pressure Check 17-19
Steering Wheel Rotational Play 17-20
Power Assist Check With Car Parked 17-20
Assist Check at Road Speed 17-21
Power Steering Speed Sensor Replacement 17-21
Steering Wheel
*Removal 17-22
Disassembly/Reassembly 17-24
*Installation 17-25
Steering Column
*Removal 17-27
Inspection 17-29
*Installation 17-30
Steering Pump
Replacement 17-32
Preload Inspection 17-32
Pulley Replacement 17-33
Flow Control Valve Inspection and Replacement 17-33
Housing Disassembly 17-36
Disassembly/Inspection 17-37
Housing Reassembly 17-38
Steering Gearbox
Gearbox Removal 17-40
Gearbox Installation 17-42
Valve Body Unit Overhaul 17-44
Disassembly/Inspection 17-49
Steering Gearbox Overhaul 17-50

SUPPLEMENTAL RESTRAINT SYSTEM (SRS)

The VIGOR SRS includes a driver's side airbag, located in the steering wheel hub. In addition, the GS model has a front passenger's airbag located in the dashboard above the glove box. Information necessary to safely service the SRS is included in this Service Manual. Items marked with an asterisk (*) on the contents page include, or are located near, SRS components. Servicing, disassembling or replacing these items will require special precautions and tools, and should therefore be done by an authorized Acura dealer.

▲WARNING

- **To avoid rendering the SRS inoperative, which could lead to personal injury or death in the event of a severe frontal collision, all maintenance must be performed by an authorized Acura dealer.**
- **Improper maintenance, including incorrect removal and installation of the SRS, could lead to personal injury caused by unintentional activation of the airbag (s).**
- **All SRS electrical wiring harnesses are covered with yellow outer insulation. Related components are located in the steering column, center console, dash, and dashboard lower panel, and in the dashboard above the glove box. Do not use electrical test equipment on these circuits.**

NOTE: The radio may have a coded theft protection circuit. Be sure to get the customer's code number before
- Disconnecting the battery
- Removing the No. 39 (10 A) fuse in the under-hood fuse/relay box
- Removing the radio

After service, reconnect power to the radio and turn it on. When the word "CODE" is displayed, enter the customer's 5 digit code to restore radio operation.

Special Tools

Ref. No.	Tool Number	Description	Qty	Page Reference
①	07GAF–SD40700	Hub Dis/Assembly Base	1	17-52
*②	07GAG–SD40300	Cylinder End Seal Slider	1	17-57, 58
*③	07GAG–SD40400	Cylinder End Seal Guide	1	17-59
④	07HAG–SF10100	Piston Seal Ring Guide	1	17-56
⑤	07HAG–SF10200	Piston Seal Ring Sizing Tool	1	17-56
⑥	07LAK–SM40110	P/S Joint Adapter (Pump)	1	17-18, 19
⑦	07LAK–SM40120	P/S Joint Adapter (Hose)	1	17-18, 19
⑧	07MAC–SL00200	Ball Joint Remover, 28 mm	1	17-40
⑨	07406–0010001	P/S Pressure Gauge	1	17-18, 19
⑩	07406–0010101	Bypass Tube Joint (included with 07406–0010001)	1	17-11
⑩-1	07406–0010300	Pressure Control Valve	1	17-18, 19
⑩-2	07406–0010400	Pressure Gauge	1	17-18, 19
⑪	07725–0030000	Universal Holder	1	17-33
⑫	07746–0010300	Attachment, 42 x 47 mm	1	17-52, 54
⑬	07749–0010000	Driver	1	17-54
⑭	07916–SA50001	Locknut Wrench, 40 mm	1	17-17, 62
**⑮	07974–SA50600	Pinion Dust Seal Guide	1	17-48, 62

* Included in P/S Seal Tool kit 07GAG–SD40000
** Included in P/S Seal Tool kit 07900–SA50000

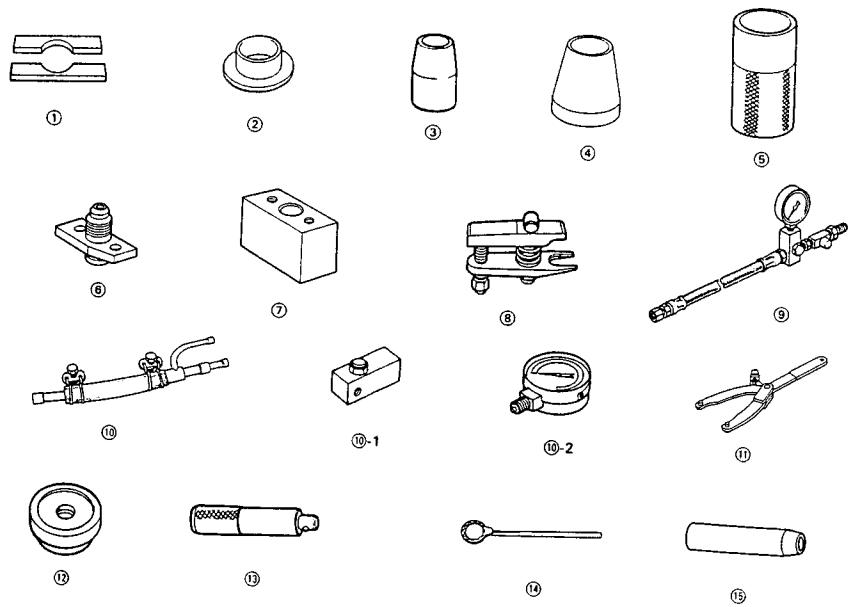

Component Location

Illustrated Index

NOTE:
- If an intact airbag assembly has been removed from a scrapped car or has been found defective or damaged during transit, storage or service, it should be deployed (see section 23).
- Before removing the gearbox, remove the ignition key to keep the steering shaft from turning.
- After installing the gearbox, check the wheel alignment and adjust if necessary.

CAUTION:
- **All SRS electrical wiring harnesses are covered with yellow outer insulation.**
- **When disconnecting the SRS wire harness, install the short connector(s) on the airbag(s), then disconnect the wire harness (see page 23-330).**
- **Replace the entire affected SRS harness assembly if there is an open circuit or damage to the wiring.**

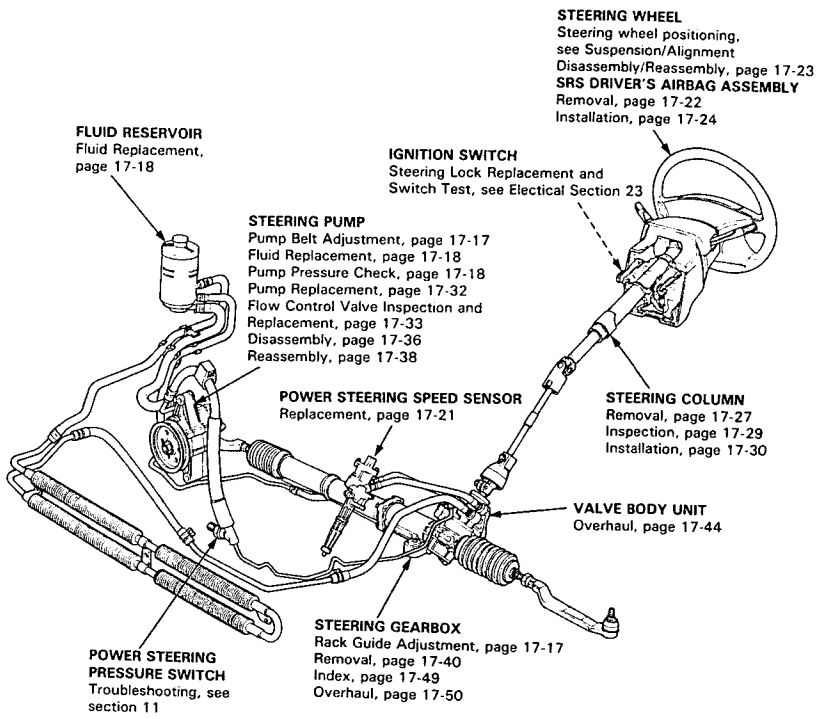

System Description

Fluid Flow Diagram

The reservoir supplies power steering fluid to the pump; the pump pressurizes the fluid to about 8,000 kPa (80 kg/cm², 1,138 psi), and delivers it through a high pressure hose to the valve body unit on the gearbox.
The 4-way valve (in the valve body unit) controls the direction of the turn by shifting fluid to the left or right side of the piston on the rack (in the power cylinder).
The gain control valve, in the valve body unit controls the amount of the assist by regulating the stroke of the 4-way valve.
The operation of the gain control valve is effected by the fluid pressure, which is regulated by the pressure control valve, sensor orifice and power steering speed sensor.
The constant pressure is generated by the pressure control valve. This pressure is used as a reference pressure for the response to the car speed. By introducing this pressure to the power steering speed sensor through the sensor orifice, the pressure downstream of the orifice is changed according to the speed of car. This pressure is then used to operated the gain control valve.
Two orifices are provided around the circumference of the gain control valve. These orifices provide the stepless reduction of the pressure from the pump according to the changes in the car speed. The reduced pressure is then sent to the reaction chambers.
Therefore, the assist varies by regulating the fluid pressure in the valve body unit according to the speed of car.
Fluid returning from the power cylinder flows back through the 4-way valve and out to the reservoir through the cooler.

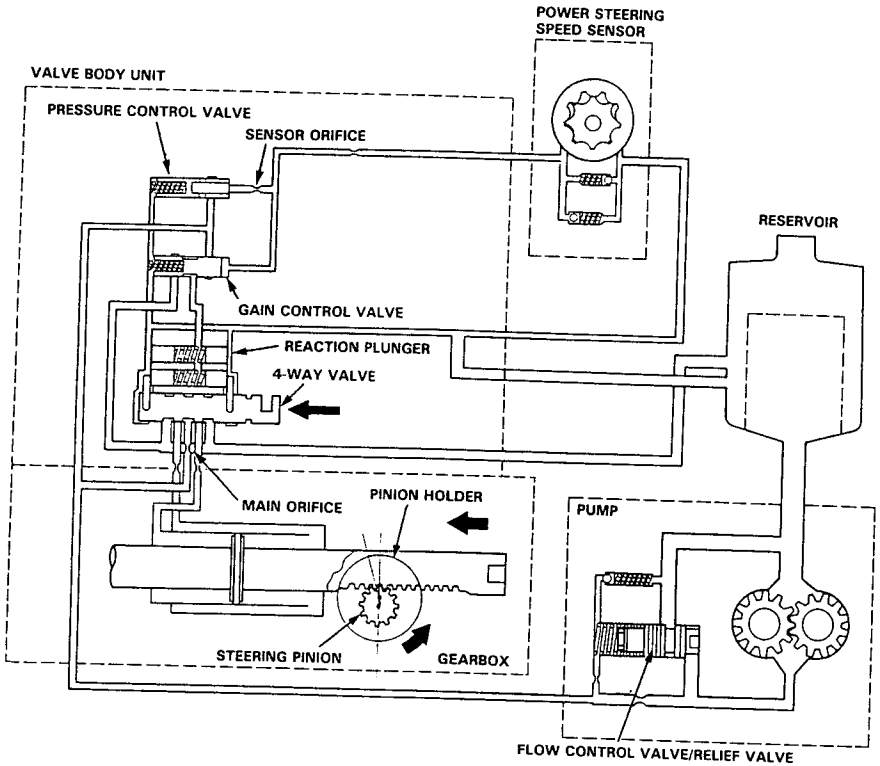

Steering Pump

The power steering pump is mounted at the right front corner of the engine and is driven by a V-belt from the crankshaft pulley, It uses a combination flow-control valve/relief valve to keep output pressure between 8,000–9,000 kPa (80–90 kg/cm², 1,135–1,280 psi). The pump is made of aluminum to reduce its weight and help it run cooler. It uses a pressure balance system which allows fluid pressurized by the pump to flow behind two "floating" plungers, automatically maintaining the correct clearance between the other ends of the plungers and the pump gears. This not only increases pump efficiency but also improves durability, since the plungers can move to compensate for the expansion caused by high temperatures; otherwise the clearance would decrease, allowing more rapid pump wear.

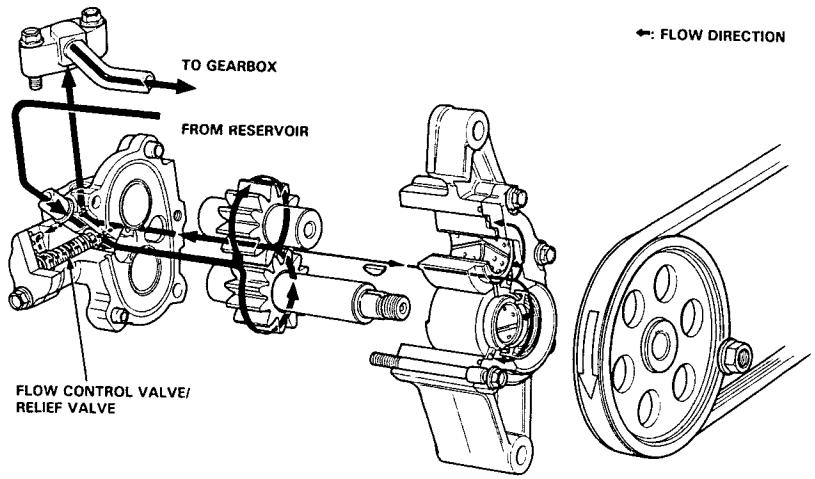

←: FLOW DIRECTION

(cont'd)

System Description

Steering Pump (cont'd)

Flow Control Valve

Fluid from the pump runs through a metering orifice to the valve body unit. This creates a pressure difference between the pump and valve body unit sides of the orifice. When pressure in the pump side is higher than the force of the spring holding the flow control valve closed, it pushes the valve down (open), and excess fluid returns to the pump inlet. The combined effect of the metering orifice and the flow control valve provides a relatively constant flow of fluid to the valve body unit.

FLOW CONTROL VALVE OPEN:

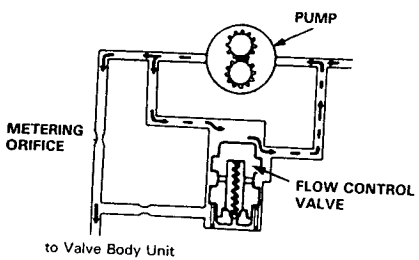

Pressure Relief Valve

As pressure on the valve body unit side builds up, it pushes the relief valve ball (inside the flow control valve) up against its spring, and excess fluid returns to the pump inlet. As the pressure under the flow control valve drops, the relief valve ball is closed by its spring, and the flow control valve is forced down again, allowing excess fluid from the pump side to return to the inlet.

This flow control valve-relief valve cylinder keeps pump output pressure between 8,000–9,000 kPa (80–90 kg/cm², 1,138–1,280 psi).

RELIEF VALVE OPEN:

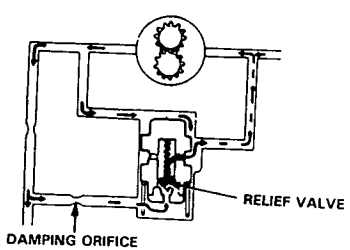

Fluid Reservoir/Filter

A one-piece reservoir and filter is attached to the fender apron on the right side of the engine compartment. The fluid and the filter/reservoir should be replaced if the system is opened for repairs, or if the fluid gets water or dirt in it.

CAUTION: Use only Honda Power Steering Fluid-V. The use of other fluid such as A.T.F., or other manufacturer's power steering fluid will cause damage to the system.

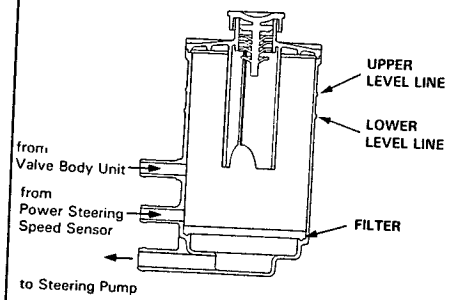

Reservoir Capacity ..... 0.5 liter (0.5 US qt., 0.4 Imp. qt.)

System Capacity ..... 1.8 liter (1.9 US qt., 1.6 Imp. qt.)

4-Way Valve

Mounted on the lower side of the gearbox is a 4-way valve that is moved horizontally by a pin on the pinion holder to shift fluid pressure to the right or left side of the power cylinder when the steering wheel is turned.
It has thrust pins at both ends, and two interconnected reaction chambers, one on each side.
Each reaction chamber contains a pair of spring-loaded plungers that rise against right and left thrust pins.
The valve body fluid passages are controlled by the 4-way valve.
Fluid pressure in the reaction chambers is reduced by the gain control valve in order to change the amount of the assist in accordance with the change of car speed.

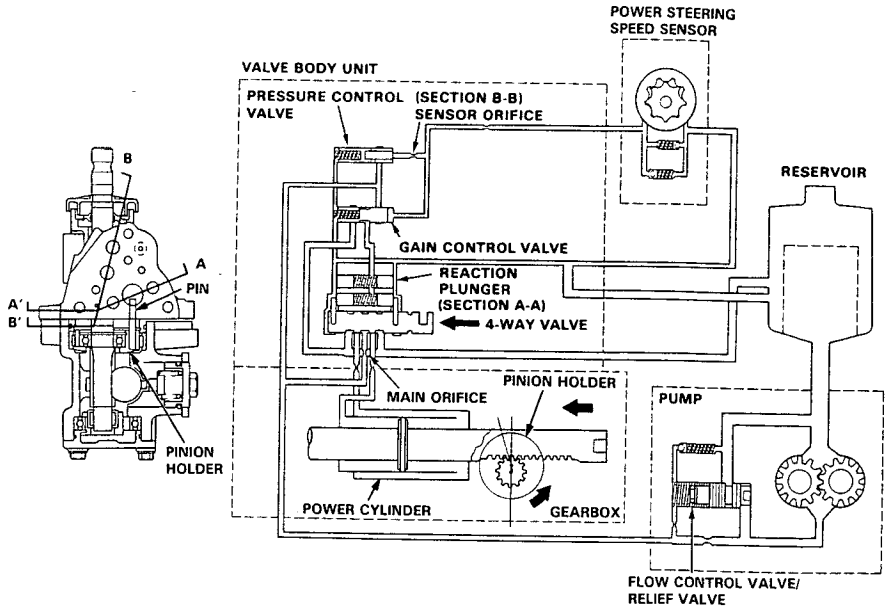

(cont'd)

System Description

4-Way Valve (cont'd)

In the power steering unit, the method used to direct a single source of fluid pressure in either of two directions (for left or right turns) involves the pinion gear transferring a "message" of direction to the fluid in the 4-way valve.
The pinion is mounted slightly off-center in a pair of bearings, which are in turn mounted in a pinion holder cylinder that rotates, centered in its own outer bearings. At the top of the pinion holder is pin which fits in a slot in the 4-way valve. As the pinion is turned (to turn left or right), because it is off-center, it also moves slightly along the rack. This movement is transferred to the holder. The pin in the holder then moves the 4-way valve to direct fluid pressure to either side of the rack in the power cylinder.
The back edges of the pinion holder (facing away from the rack) hit the stops cast into both sides of the gear housing to avoid pushing the 4-way valve too far in either direction. The front edge of the pinion holder cuts off assist at full lock as described on the next page.

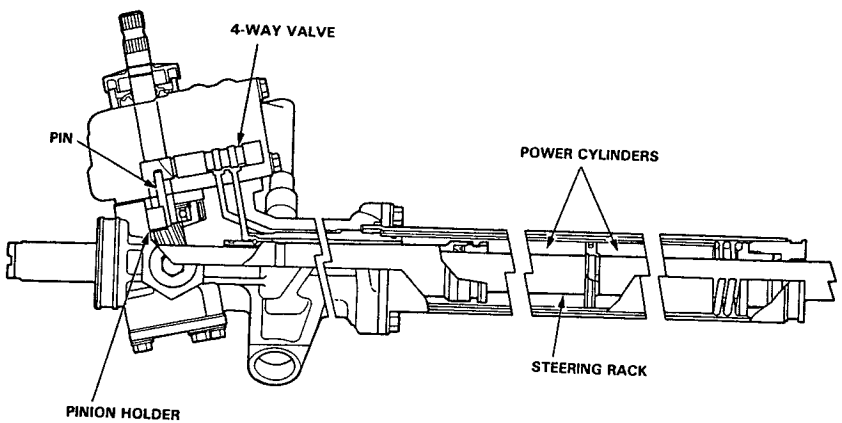

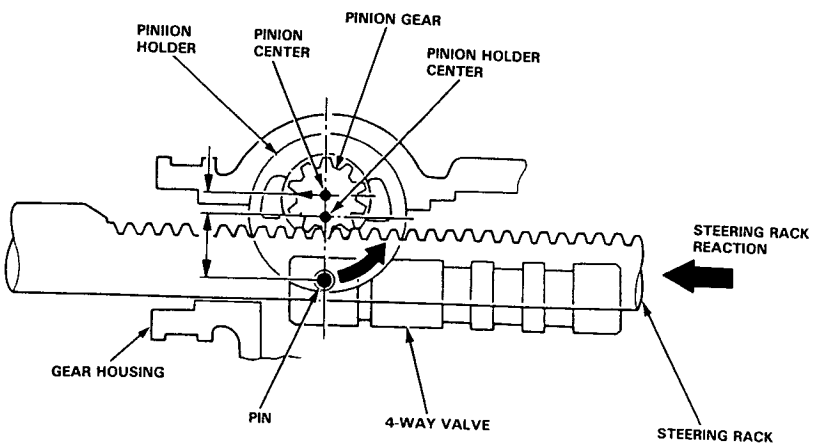

Full-Lock Unloader System

The 4-way valve shifts the direction of fluid flow when the steering wheel is turned, right or left. However, when the wheel is turned to the right or left lock at parking speed, the edge of the pinion holder rides up on the end of the rack, moving the pin in the opposite direction which pulls the 4-way valve back to neutral.
This keeps pump pressure from building up (which could cause idle speed to drop), and improves steering feel by increasing resistance at left and right lock.

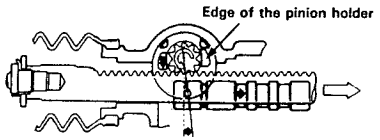

Control in "assist" position

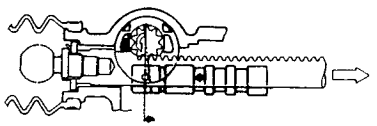

4-Way valve moves back to "neutral" position

Power Steering Speed Sensor

The power steering speed sensor is a trochoid-rotor, hydraulic pump combined with a relief valve and a one-way valve. It is driven by the speedometer gear shaft, which in turn is driven by a helical gear on the differential.

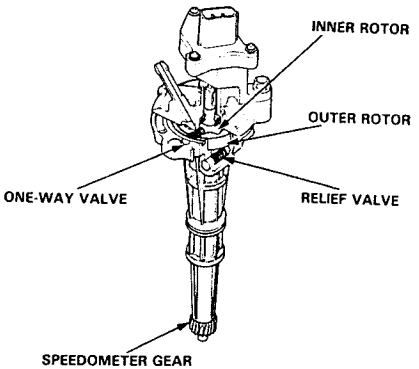

The power steering speed sensor turns only when the car is moving, controlling the gain control valve. The constant pressure is generated by the pressure control valve.

This pressure is used as a reference pressure for the response to the car speed. By introducing this pressure to the power steering speed sensor through the sensor orifice, the pressure downstream of the orifice is changed according to the speed of the car.

This pressure is then used to operate the gain control valve.

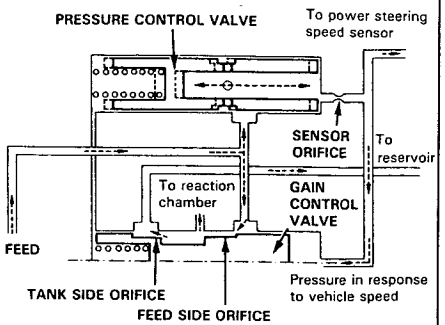

(cont'd)

System Description

Power Steering Speed Sensor (cont'd)

With the engine running at idle in a parked car, fluid flow through the sensor rotors is blocked because the rotors are not turning. Therefore, the gain control valve moves left.
On the gain control valve, the orifice resistance is high on the pump side, while it is low on the reservoir side, with the result that pressure in the reaction chamber is lowered the and steering wheel operates with easily.

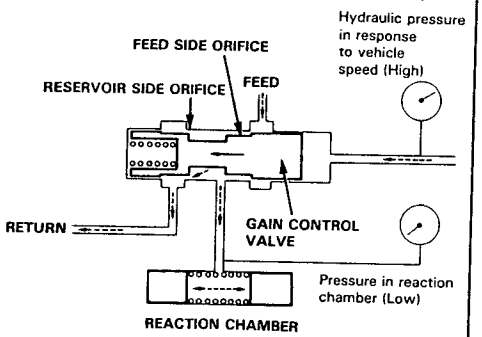

As the car is driven away, the rotors start turning and the fluid returns to the reservoir, reducing the fluid pressure at the gain control valve. Therefore, the gain control valve moves right, and the orifice resistance on the pump and reservoir sides is appropriately balanced, with the result that the reaction chamber is in the medium range and the steering resistance is moderate.

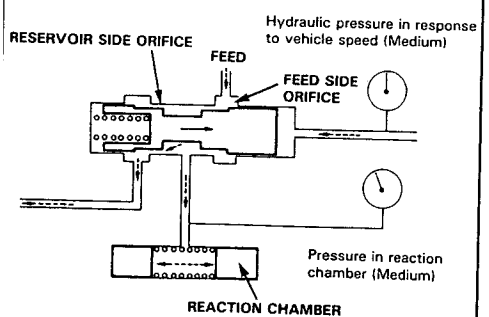

When the car is moving at high speed, the sensor reduces the pressure further and the gain control valve moves right. The orifice pressure on the pump side is low, and the pressure on the reservoir side is high, and the fluid pressure in the reaction chamber is also high, giving the steering wheel less assist.

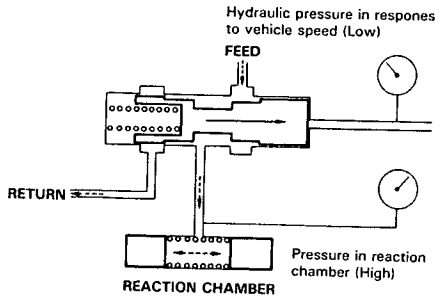

One-way Valve (In Power Steering Speed Sensor)

When the car is moving at high speed, negative pressure develops at the sensor inlet because the power steering sensor is pumping faster than the fluid can be supplied. To compensate for this, the outlet and inlet ports are connected internally by a passage containing a one-way valve that lets output fluid recirculate to the inlet port to equalize pressure.

Driving at High Speed:

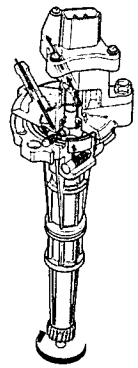

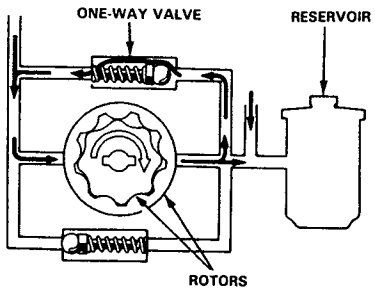

Relief Valve (In Power Steering Speed Sensor)

When the car is moving in reverse, the power steering speed sensor also turns backward and pumps fluid in the opposite direction. To avoid building up pressure in the reaction chambers that would increase steering effort while driving in reverse, the inlet and outlet-ports are connected by a second internal passage containing a relief valve that allows the fluid to recirculate.

Driving in Reverse:

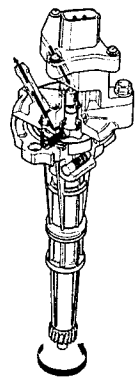

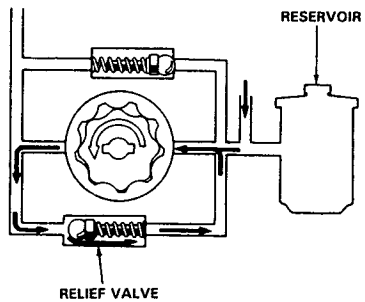

Troubleshooting

General Troubleshooting

Check the following before you begin:

- Has the suspension been modified in a way that would affect steering?
- Are tire sizes and air pressure correct?
- Is the steering wheel original equipment or equivalent?
- Is the power steering pump belt properly adjusted?
- Is the steering fluid reservoir filled to proper level?
- Is the engine idle speed correct and steady?

Hard Steering

- Little or no assist in both directions with car parked.
  - Check for bubbles in power steering fluid.
    - If there are bubbles, check the reservoir input side hose and pump front seal for air leaks. Repair as necessary.
    - If there are no bubbles, check if assist improves when engine speed is increased to 3,000 rpm.
      - If assist improves, check the flow control valve for internal leaking, and clean or replace as necessary (see page 17-33). If the valve is OK, replace the steering pump.
      - If assist does not improve, measure the force required to turn the wheel with the power steering speed sensor hose plugged and the car parked (see page 17-20).
        - Steering effort above normal. Check the gain control valve for sticking or a clogged orifice; clean or replace the valve as necessary (see page 17-44). If the gain control valve is OK, check the pinion pin for free movement. If seized or binding, overhaul the steering gearbox.
        - Steering effort below normal. Check fluid pressure, using power steering gauge with shut-off valve closed (see page 17-18).
          - Fluid pressure below 8,000 kPa (80 kg/cm², 1,138 psi).
            - Check the flow control valve for internal leaking, and clean or replace as necessary (see page 17-33). If the valve is OK, replace the pump.
          - Fluid pressure 8,000–9,000 kPa (80–90 kg/cm², 1,138–1,280 psi).
            - The power steering speed sensor is leaking internally; replace the power steering speed sensor (see page 17-21).
- Assist in one direction only, little or no assist in the other.
  - Remove the valve body unit and check the pinion pin for free movement. If OK, check the 4-way valve for free movement (see page 17-44). Repair as necessary.

Uneven or rough steering.

- Belt slipping on the pulley.
  - Adjust the belt tension. Replace the belt, if necessary (see page 17-17).
- Gain control valve sticking or leaking.
  - Check the gain control valve; clean or replace the gain control valve or valve body unit.
- Idle speed low or erratic.
  - If the engine stalls when wheel is turned while car is stopped or moving at low speed, adjust idle speed (see section 11).
- Air in reserve, or low power steering fluid level.
  - Check the power steering fluid level. If level is excessively low, check for leaks in the system. Add the fluid to the specified level.
    - If fluid level is OK, check O-rings and seals on both ends of the pump inlet hose, and the oil pump housing mating surfaces for suction leaks. Replace parts as necessary.
- Improperly adjusted rack guide.
  - Adjust the rack guide (see page 17-17).
    - If the rack guide adjustment is OK, check the pinion bearings for wear or damage. Replace them as necessary.

(cont'd)

Troubleshooting

General Troubleshooting (cont'd)

Shock or vibration when wheel is turned to full lock.	Pump belt slipping on pulley (pump stops momentarily).	Adjust the belt tension (see page 17-17) or replace the belt.
	Install the power steering pressure gauge. Close the shut-off valve fully, and measure the pump pressure (see page 17-18).	The pump pressure should be 8,000–9,000 kPa (80–90 kg/cm², 1,138–1,280 psi) with needle fluctuation of ±500 kPa (±5 kg/cm², ±70 psi) or less. If the needle fluctuation exceeds ±500 kPa (±5 kg/cm², ±70 psi), check the flow control valve. If the flow control valve is OK, replace the pump.
Assist (excessively light steering) at high speed.	Measure force required to turn wheel with bypass tube joint installed, and car parked on dry paved surface (see page 17-20).	If below, check gain control/pressure control valves and control unit, and replace parts as necessary.
Steering kicks back during wide turns.	Pump belt slipping.	Adjust the belt tension (see page 17-17) or replace the belt.
	Sticking gain control valve or control valve.	Replace the gain control valve or valve body unit.
	Rack guide adjusted too loose.	Adjust the rack guide (see page 17-17).
Wheel will not return smoothly.	Tire pressure too low.	Inflate to correct pressure.
	Improper front wheel alignment.	Readjust the front wheel alignment, or replace parts as necessary.
	Improperly adjusted rack guide.	Adjust the rack guide (see page 17-17).

Noise and Vibration

NOTE: Pump noise in first 2–3 minutes after starting in cold weather (−20°C, −4°F or colder) is normal.

Humming	Humming due to pulsation of fluid is normal, particularly when wheel is turned with car stopped.	
	If equipped with Automatic transmission, the hum could be torque converter or pump noise	Confirm by temporarily removing pump belt
	High pressure line touching the frame	Reposition the line
Squeaking	Belt slipping.	Tighten or replace the belt.
	Pinion shaft seal not lubricated.	Grease the pinion shaft seal.
	Burrs on the pinion gear	Replace the pinion gear.
Rattle or chattering	NOTE: A single "clunk" may be a normal amount of linkage clearance. To distinguish this type of clunk, turn the wheel back and forth with the engine OFF.	
	Loose pump pulley	Tighten or replace the pulley. If shaft is loose, replace the pump.
	Loose steering shaft connector, tie-rod, or ball joint.	Check and tighten, or replace parts as necessary
	Column shaft wobbling.	Replace the column assembly.
Hissing	Lines or hoses from the valve body unit touching each other.	Reposition lines so they don't touch.
	Noise from the valve body unit.	Replace the valve body unit.
Pump gear noise	NOTE: Pump noise up to 2-3 minutes after starting in cold weather (−20°C, −4°F or colder) is normal. Compare pump noise at operating temperature to another car	If pump noise is abnormally loud, check the pump drive and driven gears (see page 17-37).
Grating noise from pump	Cavitation caused by air bubbles in fluid	Check fluid level. If low, fill reservoir to proper level, and check for leaks. Tighten or replace as necessary
		Check for crushed suction hose or a loose hose clamp allowing air into the system. Tighten or replace as necessary

Troubleshooting

Fluid Leaks

Steering gearbox	Leaking from cylinder end seal into tie-rod boots.	Leaking from left side.	Remove the 4-way valve and inspect the 11 mm O-ring and the port housing bore for pits, burrs or scratches (see page 17-46). Repair as necessary.
		Leaking from right side.	If no abnormality is found, replace the O-ring, reseal the gearbox and inspect the steering rack sealing surface for burrs or scratches between the steering rack gear teeth and the piston. Inspect the seal retainer bore in the gearbox housing for proper chamfer and sharp edges (see page 17-49).
			Reseal gearbox and inspect the rack sealing surface between the steering rack piston and the right end (see page 17-49).
	Leaking from the valve body unit mating surfaces.		Tighten attaching bolts or replace the valve body or port housing.
	Leaking from either side of the valve body.		Replace the all valve body unit seals and O-rings.
	Leaking from drilled passage plug (steel ball).		Replace the valve body.
Pump	Front seal leaking		Replace the front seal.
	Pump housing leaks at either end.		Replace the housing O-rings. If the housing still leaks, replace the pump.
Power steering speed sensor	Leaking		Replace the power steering speed sensor.
Reservoir	Leaking from around cap.		Reservoir overfilled. Pull off the hose, and drain to proper level.
			Air leak in suction side of system (reservoir, inlet hose, front pump seal). Repair or replace as necessary.
Pump outlet line (high pressure)	Leaking at threaded fitting.		Tighten fitting. If still leaking, replace the hose.
	Leaking at swagged joint.		Replace the hose.
Low pressure hoses	Leaking because of damage, deterioration, or improper assembly		Replace or repair as necessary
Pipes	Leaking at gearbox connection. (at flare nut).		Tighten connector. If still leaking, replace the pipe or control unit.
	Leaking at gearbox connection (at O-ring joint).		Replace the O-ring.

Maintenance

Pump Belt Adjustment

NOTE: When using a new power steering pump belt, first adjust the deflection or tension to the values for the new pump belt, then readjust the deflection or tension to the values for the used pump belt after running engine for five minutes.

1. Remove the air cleaner cover and intake air duct (see section 11).

2. A properly adjusted pump belt should deflect about 6.5–9.0 mm (0.26–0.35 in) when you push on it midway between the pulleys with a force of about 100 N (10 kg, 22 lbs).

   NOTE: On a brand new pump belt, the deflection should be 4.5–6.5 mm (0.18–0.26 in) when first measured.

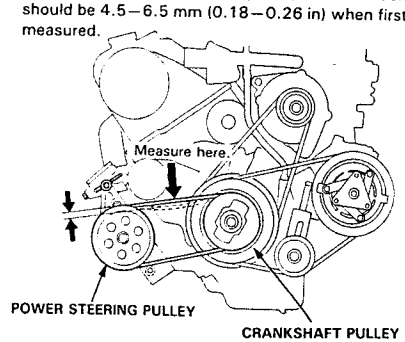

3. Loosen the pump mounting bolt and nut, and turn the adjusting bolt to get proper tension, then retighten the pump mounting bolt and nut.

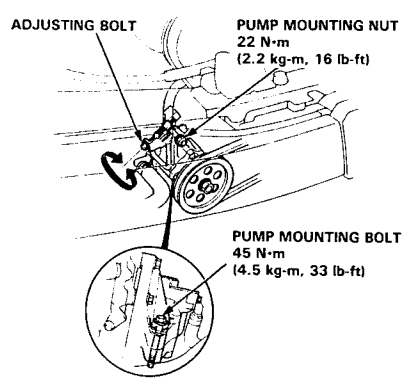

4. Start the engine and turn the steering wheel from lock-to-lock several times, then stop the engine and recheck the pump belt tension.

On-Car Checks

Rack Guide Adjustment

NOTE: Perform rack guide adjustment with the wheels in the straight ahead position.

1. Loosen the rack guide screw locknut with the special tool.

CAUTION: When servicing, be careful not to damage power steering fluid lines with the special tool.

2. Tighten, loosen and retighten the rack guide screw two times to 4 N·m (0.4 kg-m, 2.9 lb-ft), then back it off $20^{+5°}_{0}$.

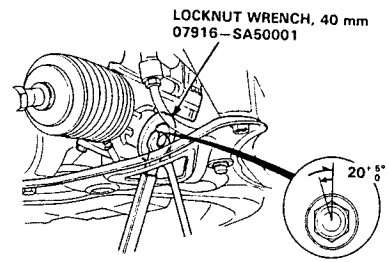

3. Tighten the locknut to about 25 N·m (2.5 kg-m, 18 lb-ft) while preventing the guide screw from turning.

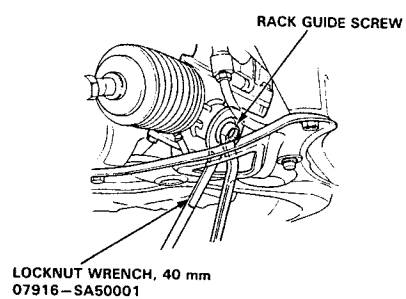

4. Check for tight or loose steering through the complete turning travel.

5. Recheck steering assist (see page 17-20).

On-Car Checks

Fluid Replacement

Fluid Level Inspection

Check the power steering fluid level with the engine cold and the car parked on level ground. Make sure the fluid level is between the UPPER and LOWER level line on the reservoir. If the level is near or below the lower level line, check the system for leaks. If the system is not leaking and fluid level is low, add fluid to the upper level line.

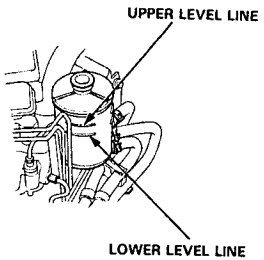

Fluid Replacement

1. Disconnect the return hose from the gearbox at the reservoir, and put the end in a suitable container.
2. Start the engine, let it run at idle, and turn the steering wheel from lock-to-lock several times. When fluid stops running out of the hose, shut off the engine. Discard the fluid.

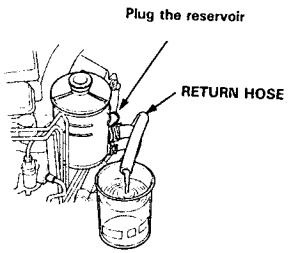

3. Refit the return hose on the reservoir.
4. Fill the reservoir to the upper level line.

NOTE: Take care not to spill the fluid on the body and parts. Wipe off any spilled fluid at once.

CAUTION: Use only Honda Power Steering Fluid-V. Using other fluids such as ATF or other manufacturer's power steering fluid will damage the system.

System Capacity:
1.8 liter (1.9 US qt., 1.6 Imp. qt.)
Reservoir Capacity:
0.5 liter (0.5 US qt., 0.4 Imp. qt.)

5. Start the engine, let it run at idle, then turn the steering wheel lock-to-lock several times to bleed air from the system.
6. Recheck the fluid level, and add fluid if necessary.

CAUTION: Do not fill the reservoir beyond the upper level line.

Pump Pressure Check

Check the fluid pressure as follows to determine whether the trouble is in the pump or gearbox.

NOTE: First check the power steering fluid level and pump belt tension.

CAUTION: Disconnect the high pressure hose with care so as not to spill the power steering fluid on the frame and other parts.

1. Disconnect the outlet hose from the pump outlet fitting, and install the pump joint adapter on the pump outlet.
2. Connect the hose joint adapter to the power steering pressure gauge, then connect the outlet hose to the adapter.
3. Install the power steering pressure gauge to the pump joint adapter as shown.

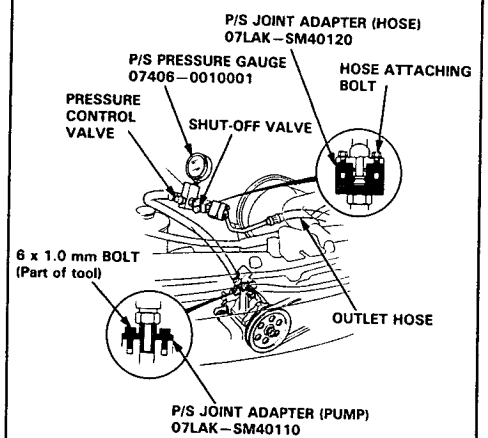

4. Open the shut-off valve fully.
5. Open the pressure control valve fully.
6. Start the engine, and let it idle.
7. Turn the steering wheel from lock-to-lock several times to warm the fluid to operating temperature.
8. Close the shut-off valve, then close the pressure control valve gradually until the pressure gauge needle is stable. Read the pressure.
9. Immediately open the shut-off valve fully.

CAUTION: Do not keep the shut-off valve closed more than 5 seconds or the pump could be damaged by over-heating.

If the pump is in good condition, the gauge should read at least 8,000–9,000 ka (80–90 kg/cm², 1,138–1,280 psi). A low reading means pump output is too low for full assist. Repair or replace the pump.

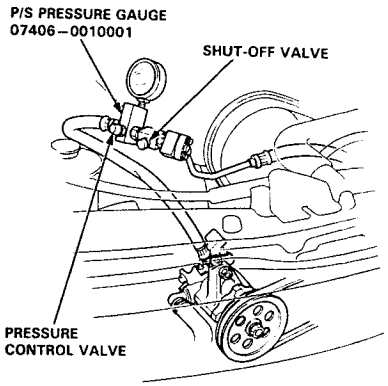

On-Car Checks

Steering Wheel Rotational Play

1. Place the front wheels in the straight ahead position, and measure the distance the steering wheel can be turned without moving the front wheels.

2. If the play exceeds the service limit, check all steering components.

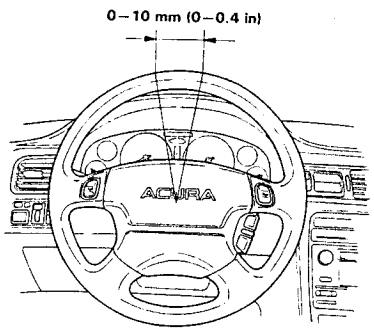

Power Assist Check with Car Parked

1. Check the power steering fluid level and pump belt tension.

2. Start the engine, let it warm up to normal operating temperature (the cooling fan comes on), and turn the steering wheel from lock-to-lock a few times to warm up the fluid.

3. Attach a spring scale to the steering wheel. With the engine idling and the car on a clean, dry floor, pull the scale as shown and read it as soon as the tires begin to turn.

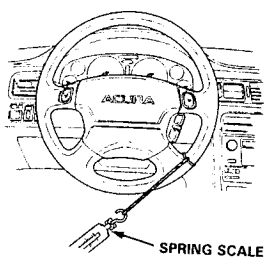

4. The scale should read no more then 32 N (3.2 kg, 7.1 lbs).
   If it reads more or less, go on to step 5.

5. Stop the engine. Disconnect the hose from the power steering speed sensor, and plug the hose and the sensor fitting as shown.

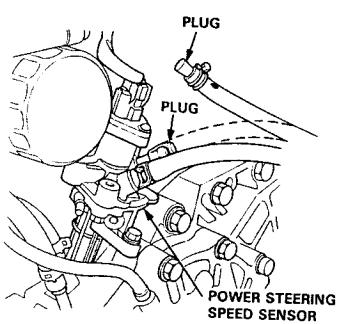

6. Start the engine, and let it idle.

   - If the reading is now 32 N (3.2 kg, 7.1 lbs) or less, replace the power steering speed sensor (see page 17-21).

   - If the reading is still more than 32 N (3.2 kg, 7.1 lbs), check the gearbox and pump.

Assist Check at Road Speed

1. Check the power steering fluid level (see page 17-18), and check the pump belt tension (see page 17-17).

2. Start the engine, let it warm up to normal operating temperature, and turn the steering wheel lock-to-lock a few times to warm up the fluid.

3. Stop the engine. To simulate speeds above 30 mph (50 km/h), disconnect the hoses from the power steering speed sensor and connect them to the bypass tube joint. Plug the end of the bypass tube joint.

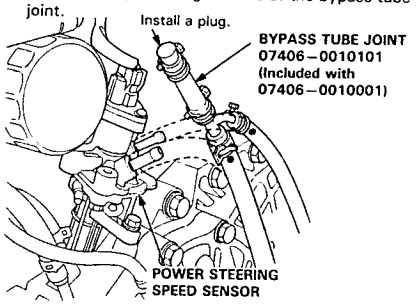

4. Attach the spring scale to the steering wheel. With the engine idling and the car on a clean, dry floor, pull the scale as shown and read it as soon as the tires begin to turn.

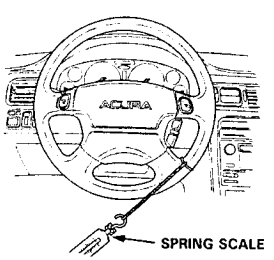

   - If the scale reads a normal 50 N (5.0 kg, 11.0 lbs), or more, the assist problem at high speeds is being caused by reduced power steering speed sensor output. Replace the power steering speed sensor.

   - If the scale reads less than 50 N (5.0 kg, 11.0 lbs), the power stering speed sensor is OK and the problem is in the sensor feed line, the pump, or the valve body unit. See if the feed line is pinched or bent, then check the pump.

   - See General Troubleshooting (see page 17-12).

Power Steering Speed Sensor Replacement

1. Disconnect the Vehicle Speed Sensor (VSS) wire connector from the power steering speed sensor.

2. Remove the sensor mounting bolt and pull the power steering speed sensor from the differential housing.

3. Disconnect the sensor hoses and plug the fittings.

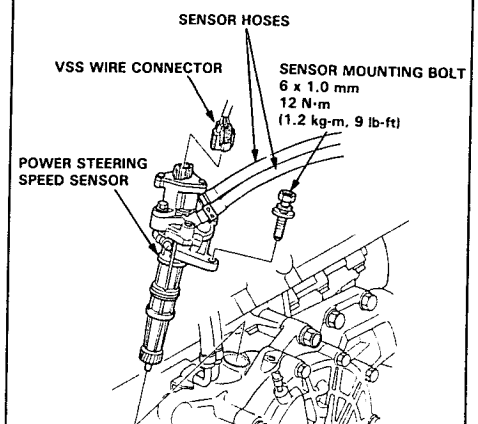

4. After installing a new power steering speed sensor, turn the steering wheel lock-to-lock with the engine idling to bleed air from the system.

5. Check the reservoir, and add fluid if necessary.

Steering Wheel

Removal

Driver's Airbag Removal

CAUTION:

- All SRS electrical wiring harnesses are covered with yellow outer insulation.
- Before disconnecting the SRS wire harness, install the short connector(s) on the airbag(s) (see page 23-330).
- Replace the entire affected SRS harness assembly if it has an open circuit or damaged wiring.

1. Disconnect the negative and positive cables from the battery.
2. Remove the access panel from the steering wheel lower cover, then remove the short connector.
3. Disconnect the connector (3-P) between the driver's airbag and cable reel.
4. Connect the short connector to the driver's airbag side of the connector.

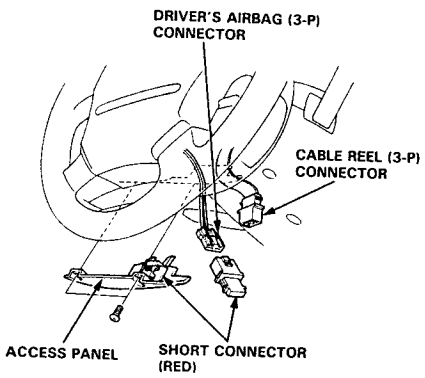

5. Remove the left access panel and cruise control set/resume switch cover.
6. Remove the two TORX® T30 bit bolts, then remove the driver's airbag assembly.

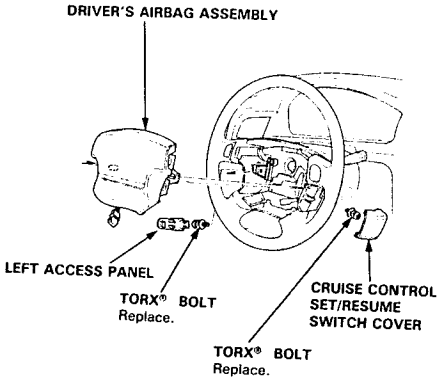

7. Disconnect the connectors from the horn and cruise control set/resume switches.

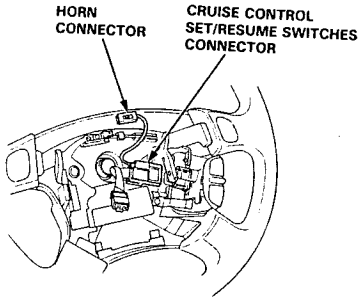

8. Remove the steering wheel nut.
9. Remove the steering wheel by rocking it slightly from side-to-side as you pull steadily with both hands.

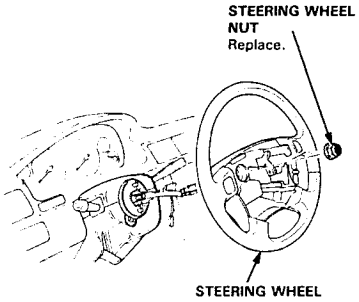

Steering Wheel

Disassembly/Reassembly

WARNING Store a removed driver's airbag assembly with the pad surface up. If the driver's airbag is improperly stored face down, accidental deployment could propel the unit with enough force to cause serious injury.

NOTE: If an intact driver's airbag assembly has been removed from a scrapped car or has been found defective or damaged during transit, storage or service, it should be deployed (see section 23).

CAUTION:
- Carefully inspect the driver's airbag assembly before installing. Do not install an airbag assembly that shows signs of being dropped or improperly handled, such as dents, cracks or deformation.
- Always keep the short connector(s) on the airbag(s) when the harness is disconnected.
- Do not disassemble or tamper with the driver's airbag assembly.

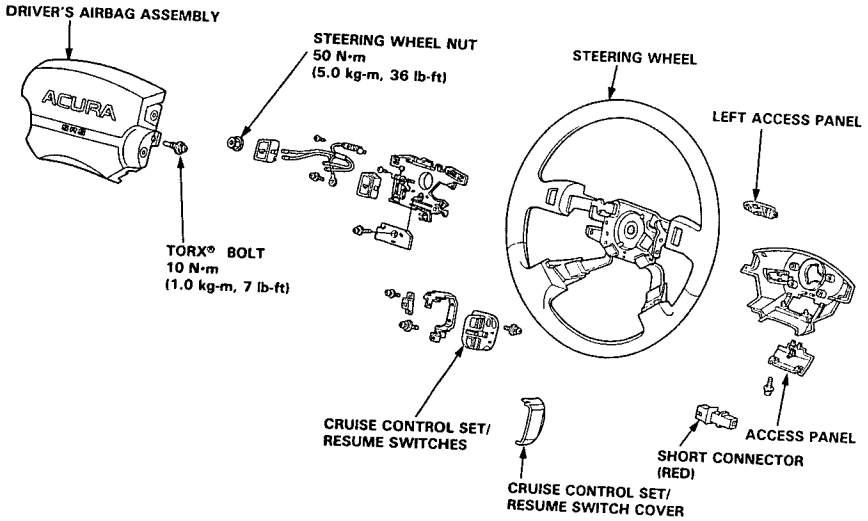

Installation

Airbag installation

CAUTION:
- Before installing the steering wheel, align the front wheels straight ahead.
- Be sure to install the harness wires so that they are not pinched or interfering with other car parts.
- Do not replace the original steering wheel with any other design, since it will make it impossible to properly install the airbag. (Use only genuine HONDA replacement parts.)
- After reassembly, confirm that the wheels are still straight ahead and that steering wheel spoke angle is correct. If minor spoke angle adjustment is necessary, do so only by adjustment of the tie rods, not by removing and repositioning the steering wheel.

WARNING Confirm that the driver's airbag assembly is securely attached to the steering wheel; otherwise, severe personal injury could result during driver's airbag deployment.

1. Before installing the steering wheel, center the cable reel.
   Do this by first rotating the cable reel clockwise until it stops.
   Then rotate it counterclockwise (approximately two turns) until:
   – The yellow gear tooth lines up with the alignment mark on the cover.
   – The arrow mark on the cable reel label points straight up.

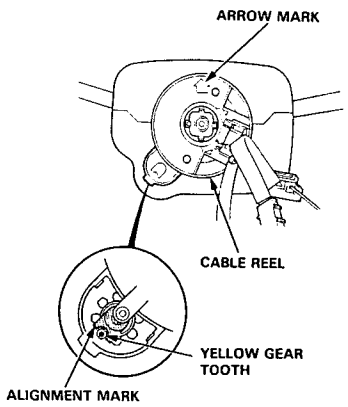

2. Install the steering wheel, and tighten the steering wheel nut.

   NOTE: Be sure the steering wheel shaft engages the pins of the cable reel.

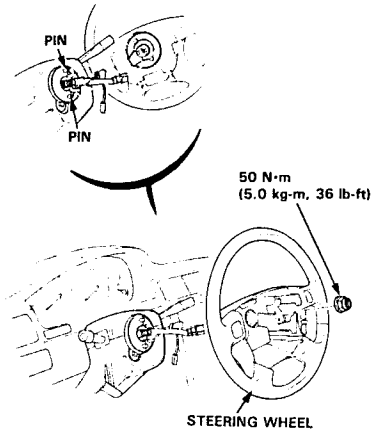

3. Insert the cruise control set/resume switches connector into the steering wheel clips.

4. Connect the horn connector.

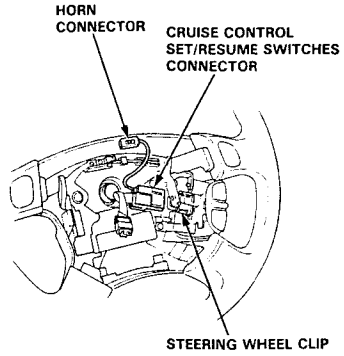

(cont'd)

Steering Wheel

Installation (cont'd)

5. Install the driver's airbag assembly with new TORX® bolts.

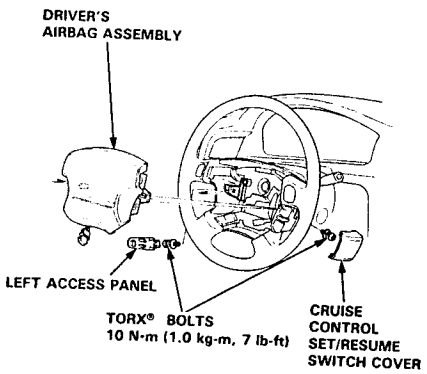

6. Disconnect the short connector from the driver's airbag connector.

7. Connect the driver's airbag (3-P) connector and cable reel (3-P) connector.

8. Attach the short connector on the access panel, and install the access panel on the steering lower cover.

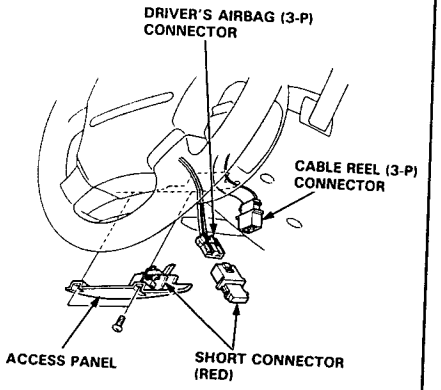

9. Connect the battery positive terminal, and then connect the negative terminal.

10. After installing the airbag assembly, confirm proper system operation:
    - Turn the ignition to II: the instrument panel SRS warning light should come on for about six seconds and then go off.
    - Confirm operation of horn buttons.
    - Confirm operation of cruise control set/resume switches.
    - Turn the steering wheel counterclockwise and make sure the yellow gear tooth still lines up with the alignment mark.

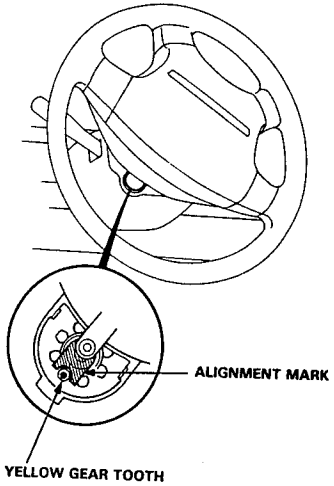

Steering Column

Removal

CAUTION:
- **All SRS electrical wiring harnesses are covered with yellow outer insulation.**
- **When disconnecting the SRS wire harness, install the short connector(s) on the airbag(s), then disconnect the wire harness (see page 23-330).**
- **Replace the entire affected SRS harness assembly if there is an open circuit or damage to the wiring.**

1. Remove the driver's airbag assembly and steering wheel (see page 17-22).

2. Remove the steering joint bolt. (from the engine compartment.)

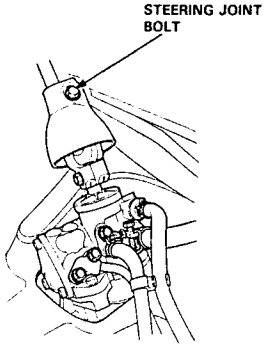

3. Remove the dashboard lower cover and driver's knee bolster.

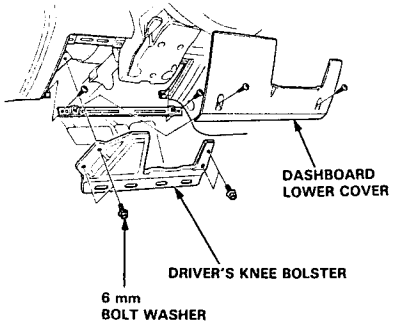

4. Remove the upper and lower column covers.

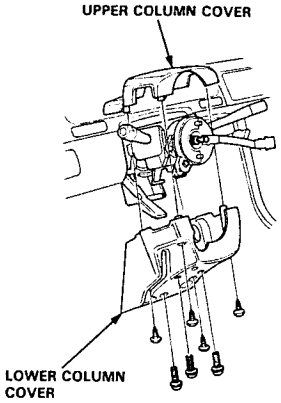

5. Remove the steering joint cover.

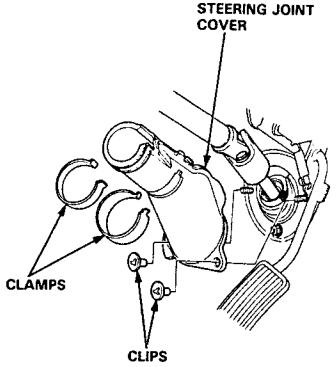

(cont'd)

Steering Column

Removal (cont'd)

6. Disconnect the cable reel connector from the SRS main harness, then remove the connector holder.

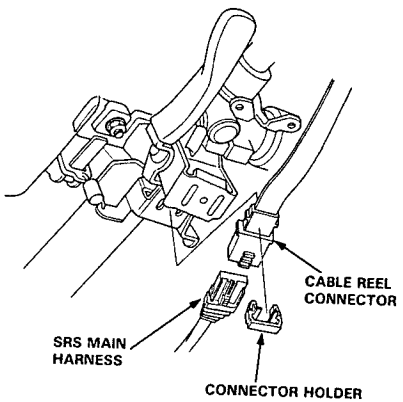

7. Remove the cable reel assembly and turn signal canceling sleeve from the combination switch.

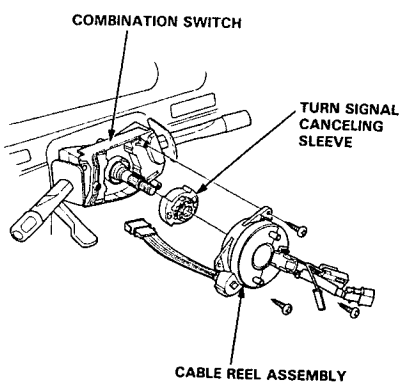

8. Remove the combination switch.

NOTE: After removing the combination switch, place it on the floor gently. Do not disconnect the cables from the combination switch.

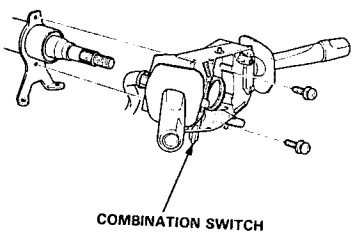

9. Disconnect the wire connector of the ignition switch.

10. Remove the steering column assembly by removing the attaching nuts and bolts.

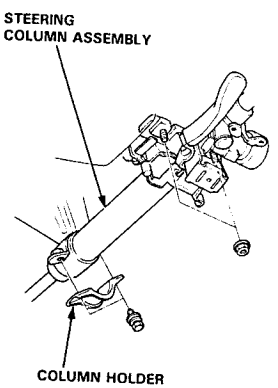

Inspection

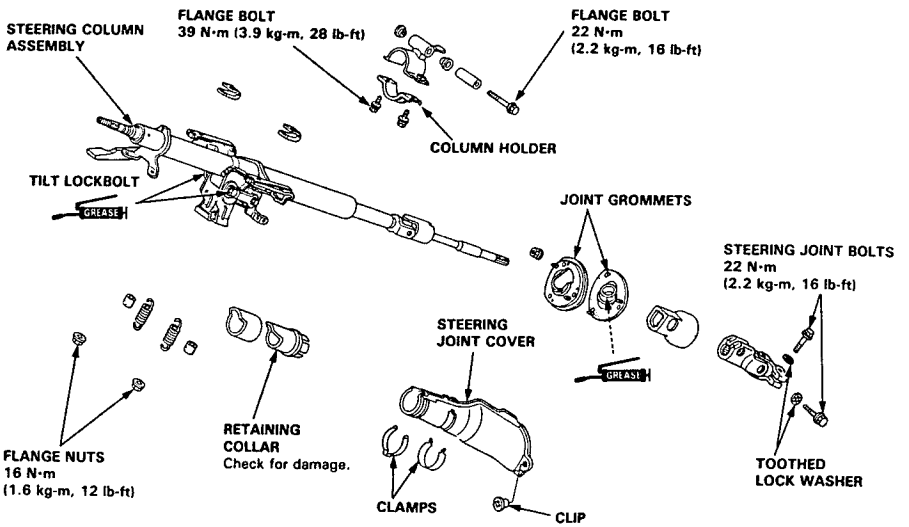

NOTE: Check the tilt mechanism, steering joint bearings and steering shaft for proper movement and damage. Replace as an assembly if damaged or faulty.

– Attach a spring scale to the knob of the tilt lever. Measure the force required to move the lever.

Preload: 70–90 N (7–9 kg, 15–20 lbs)

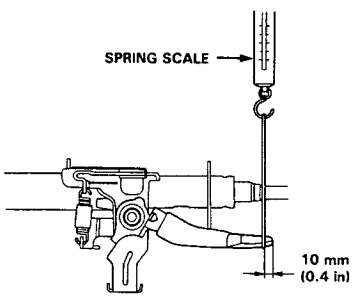

– If the preload measured is not within the specification, remove the 6 mm bolt and stopper. Then adjust the preload by tightening or loosening the tilt lock bolt.

– Reinstall the stopper and 6 mm bolt, and recheck the preload.

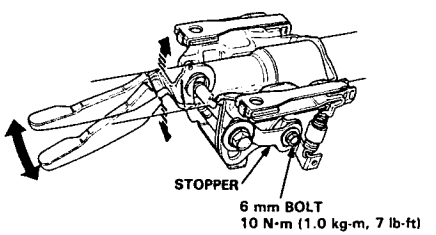

Steering Column

Installation

CAUTION:
- **All SRS electrical wiring harnesses are covered with yellow outer insulation.**
- **Before disconnecting the SRS wire harness, install the short connector(s) on the airbag(s) (see page 23-330).**
- **Replace the entire affected SRS harness assembly if it has an open circuit or damaged wiring.**

NOTE:
- Be sure the pinion shaft and the steering column shaft are aligned; the joint should slip on freely. If not, reposition the steering rack to correct the misalignment.
- Coat the interior of the steering joint grommet with grease.

1. Guide the steering shaft through the engine bulkhead. Align the bolt hole in the steering joint with the slot in the steering shaft, and insert the shaft into the steering joint.

2. Install the steering joint bolt and tighten it.

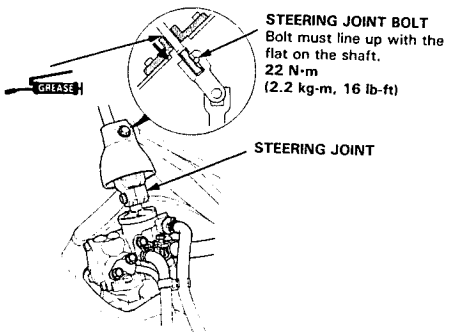

3. Install the steering column assembly with the nuts and column holder.

4. Connect the ignition switch connector.

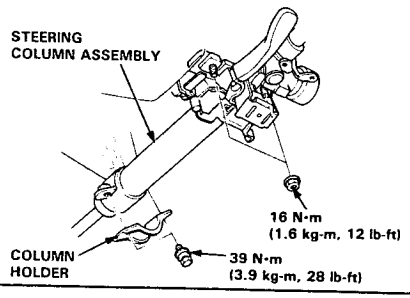

5. Install the combination switch.

NOTE: Be sure the wires are not caught or pinched by any parts when connecting the combination switch and the cable reel.

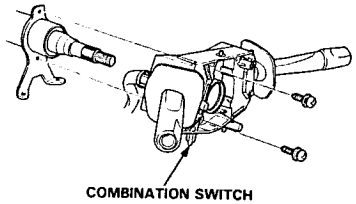

6. Install the turn signal canceling sleeve and cable reel onto the steering column.

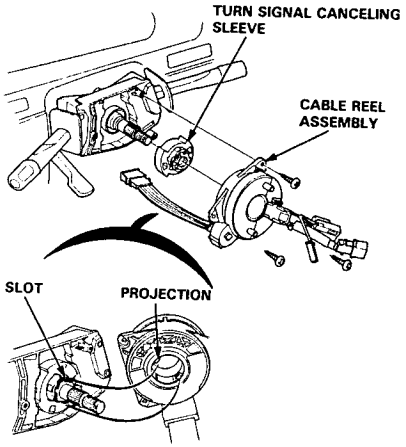

NOTE: Align the slot in the canceling sleeve with the projection on the cable reel.

7. Connect the cable reel connector to the SRS main harness, then install the connector holder.

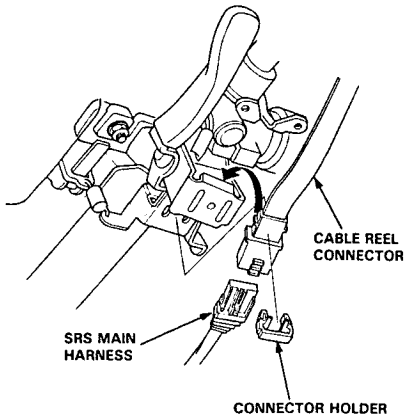

8. Install the steering joint cover with the clamps and clips.

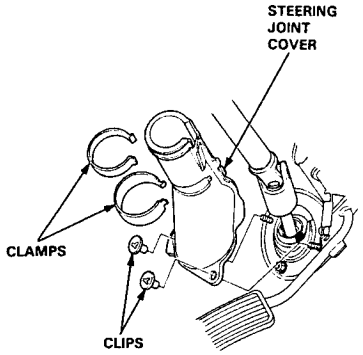

9. Install the upper and lower column covers.

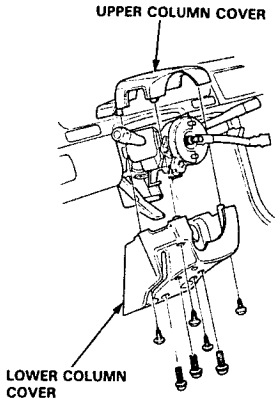

10. Install the driver's knee bolster and dashboard lower cover.

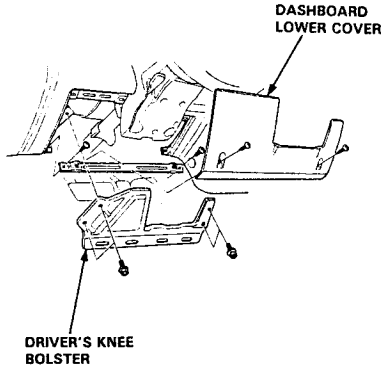

11. Install the steering wheel and driver's airbag assembly (see page 17-24).

Steering Pump

Replacement

NOTE: Before disconnecting the hoses from the pump, place a suitable container under the car.

1. Drain the power steering fluid from the reservoir.
2. Remove the air cleaner cover and intake air duct (see section 11).
3. Disconnect the inlet and outlet hoses from the pump, and plug them.
4. Remove the power steering pump belt by loosening the pump mounting bolt, nut and adjusting bolt.
5. Remove the pump mounting bolt and nut, then remove the pump.

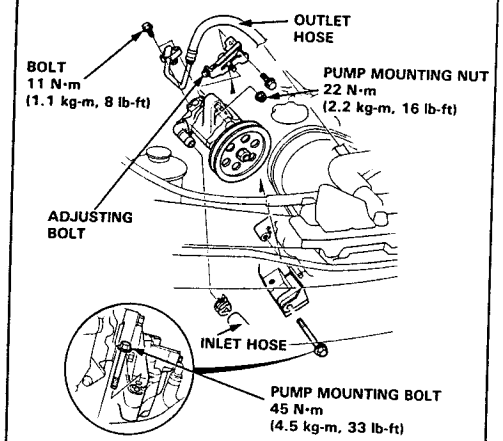

NOTE: Do not turn the steering wheel while the pump is removed.

6. Loosely install a new pump on the bracket.
7. Connect the inlet and outlet hoses to the pump.
8. Install and adjust the power steering pump belt (see page 17-17).

CAUTION:
- **Make sure that the pump belt is securely on the groove of the pulleys.**
- **Do not get power steering fluid or grease in the pump belt or pulley faces. Clean off any fluid or grease before installation.**

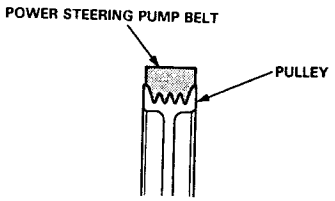

9. Fill the reservoir to the upper level (see page 17-18).

NOTE: Take care not to spill the fluid on the body and parts. Wipe off any spilled fluid at once.

Preload Inspection

Check the pump preload with a torque wrench after overhauling a pump or installing a replacement pump.

Preload: 8 N·m (0.8 kg-m, 5.8 lb-ft) max.

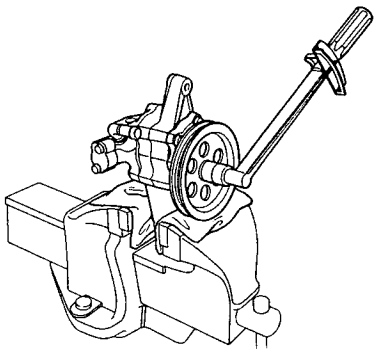

Pulley Replacement

CAUTION: Be careful not to damage the pump housing with the jaws of the vise.

1. Drain the fluid from the steering pump.
2. Hold the steering pump in a vise with soft jaws, and hold the pulley with the special tool; then remove the pulley nut and pulley.

NOTE: Pulley nut has left hand threads.

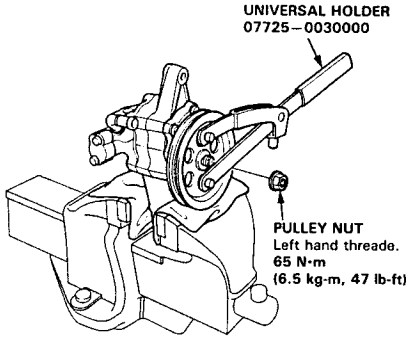

3. Install the pump pulley with its flat surface facing the nut as shown. Then install the pulley nut.
4. Hold the pulley with the special tool and tighten the pulley nut.

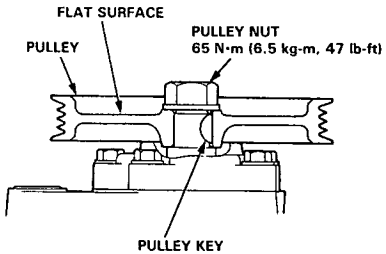

5. Check that the pump turns smoothly by turning the pulley.

Flow Control Valve Inspection and Replacement

1. Remove the two 6 x 16 mm flange bolts, then remove the housing port cover, valve spring and O-rings.

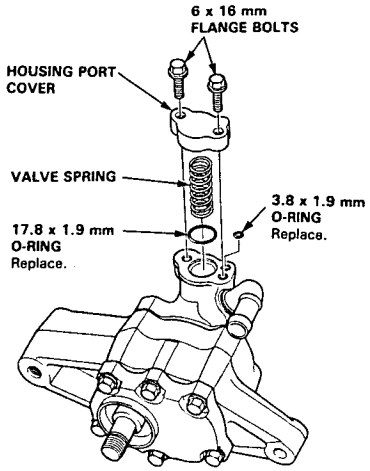

2. Remove the flow control valve from the port housing.

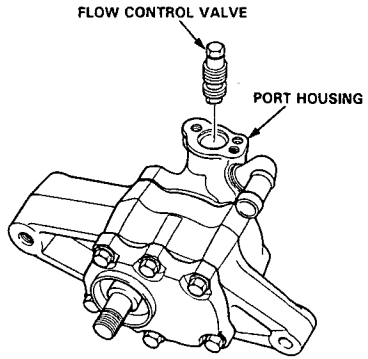

(cont'd)

Flow Control Valve Inspection and Replacement (cont'd)

3. Check for wear, burrs, and other damage to the edges of the grooves in the flow control valve.

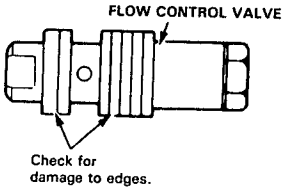

4. Slip the flow control valve back in the pump and check that it moves in and out smoothly.

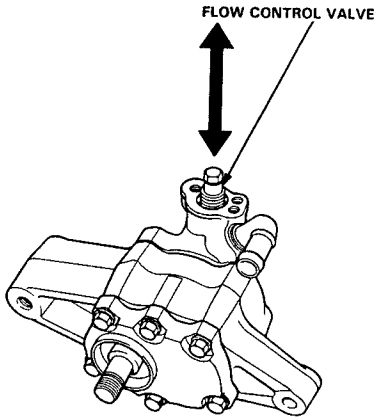

If OK, go on to step 5, if not, replace the valve:

- The original valve was selected for a precise fit in the port housing bore, so make sure the new one has the same identification mark.

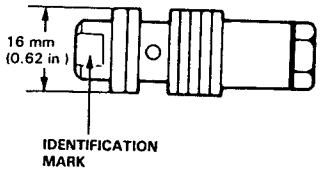

Mark	Part Name	Size mm(in)
A	FLOW CONTROL VALVE A	15.995–16.000 (0.6297–0.6299)
Without mark	FLOW CONTROL VALVE B	16.000–16.006 (0.6299–0.6302)

5. Attach a hose to the end of the flow control valve as shown.

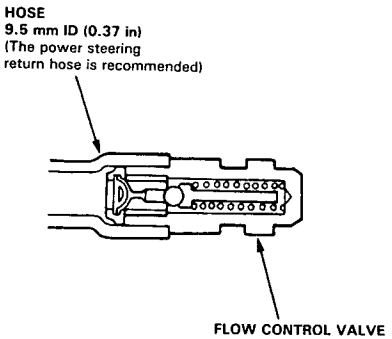

6. Submerge the flow control valve in a container of power steering fluid or solvent and blow gently on the hose. If air bubbles leak through the flow control valve, replace or repair it as follows.

NOTE: Do not use compressed air.

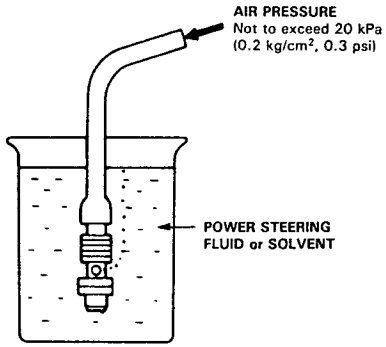

7. Clamp the bottom end of the flow control valve in a vise with soft jaws.

8. Unscrew the seat in the top end of the flow control valve, then remove any shims, the relief check ball, relief valve and relief valve spring.

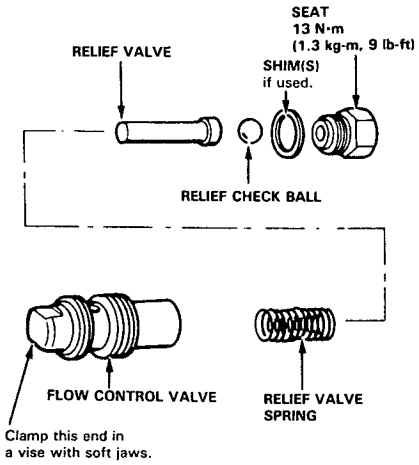

9. Clean all the parts in solvent, dry them off, then reassemble and retest the valve.

NOTE: If necessary, relief pressure is adjusted at the factory by adding shims under the check ball seat. If you found shims in your valve, be sure you reinstall as many as you took out.

10. Install the flow control valve in the reverse order of removal.

- Apply steering grease (Honda P/N 08733–B070E) to new O-rings.
- Coat the flow control valve with power steering fluid then install it and the valve spring.

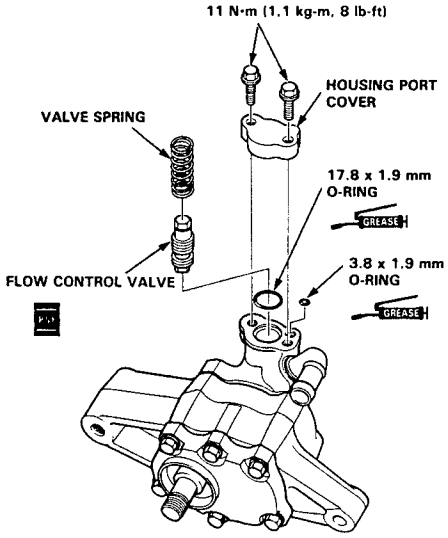

Steering Pump

Housing Disassembly

CAUTION: The pump components are made of aluminum. Be careful not to damage them when servicing.

1. Remove the pump from car (see page 17-32).
2. Remove the pulley (see page 17-33).
3. Remove the flow control valve (see page 17-33).
4. Remove the flange bolts then remove the pump front cover, housing seal, plunger seal and dowel pins.

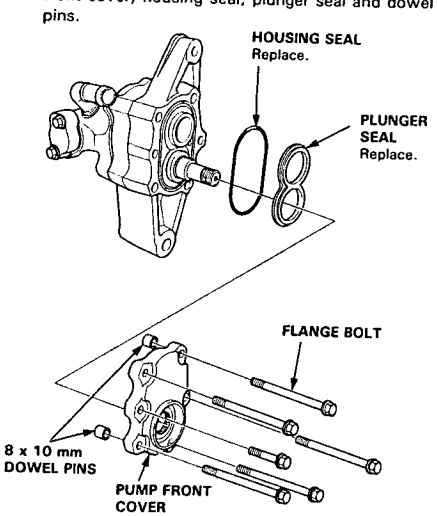

5. Separate the port housing from the pump housing.
6. Remove the dowel pins and housing seal from the port housing.

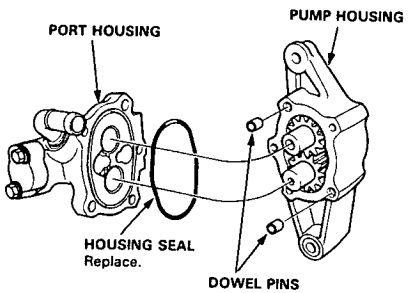

7. Remove the pump drive and driven gears from the pump housing.
8. Remove the plungers from the pump housing.

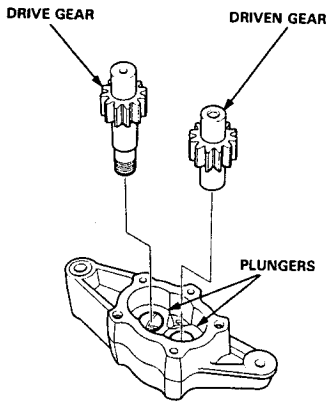

9. Pry the oil seal out of the pump front cover.

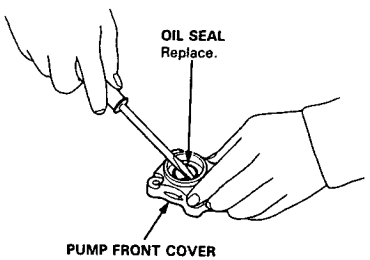

Disassembly/Inspection

CAUTION: Pump components are made of aluminum. Be careful not to damage them when servicing.

- Clean all of the disassembled parts thoroughly.
- Replace all O-rings and seals. Do not dip new O-rings and seals in solvent; coat O-rings with steering grease before installation, and make sure they stay in place during reassembly.
- The shaded parts are selectively fitted, and should not be disassembled except to replace seals. If any one of them is faulty, replace the whole pump as an assembly.

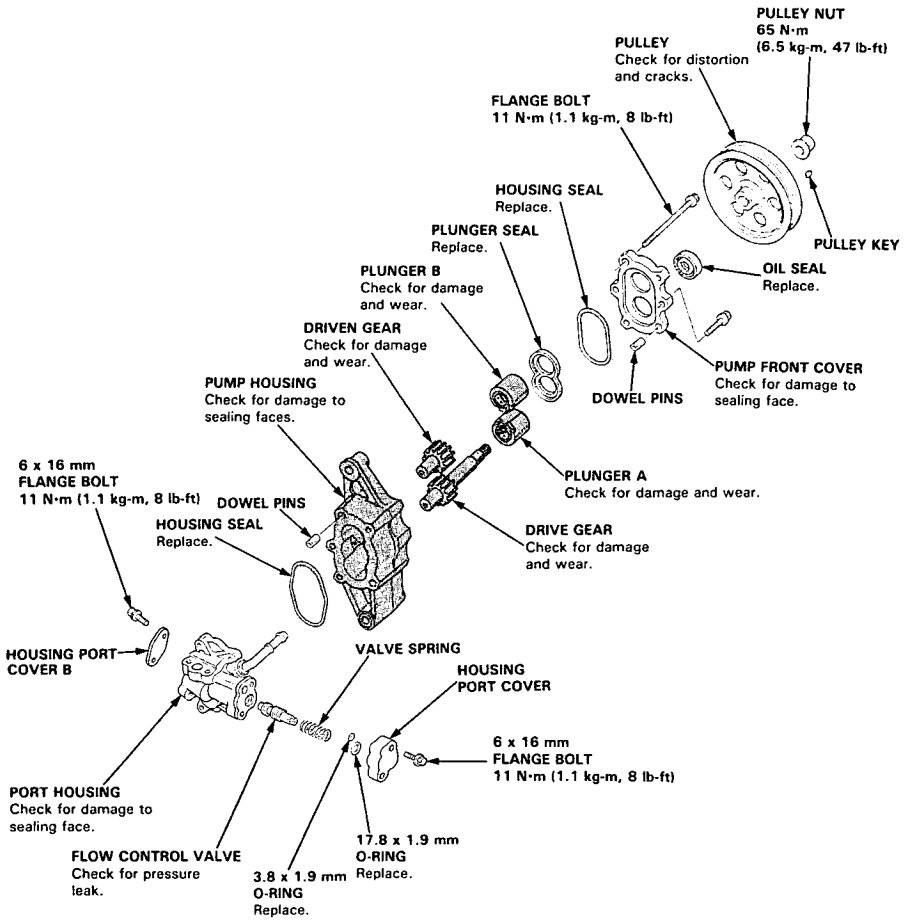

Steering Pump

Housing Reassembly

1. Coat the outer surfaces of the plungers with power steering fluid, then install them in the pump housing.
   Make sure the plunger holes are positioned as shown.

   NOTE: Install the plungers so the cutouts are aligned as shown.

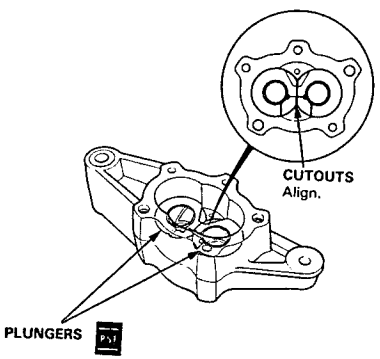

2. Coat the inside of the plungers with power steering fluid.

3. Install the pump drive and driven gears in the pump housing.

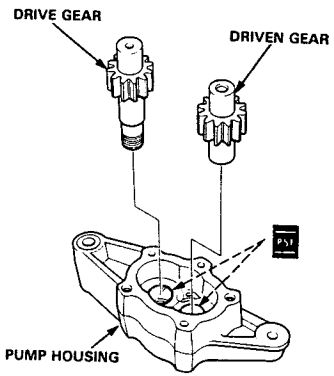

4. Coat the port housing groove with power steering fluid first, then position a new housing seal on the port housing.

5. Coat the bushings on the port housing with power steering fluid.

6. Install the dowel pins in the pump housing.

7. Install the port housing on the pump housing.

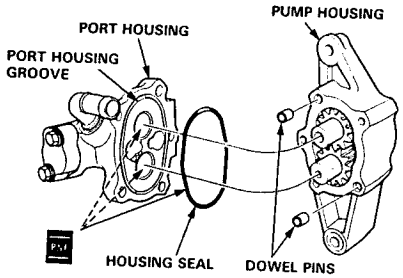

8. Coat the pump housing groove with power steering fluid, then position a new housing seal on the pump housing.

9. Coat the new plunger seal with power steering fluid, and install it over the plungers.

10. Install the dowel pins in the pump housing.

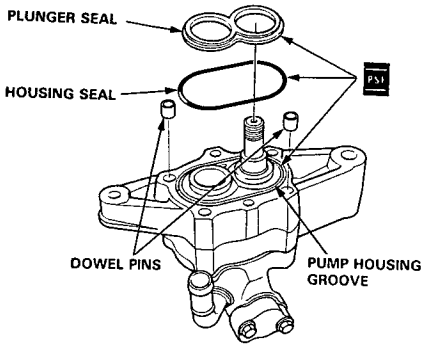

11. Install the new oil seal in the pump front cover; get it started by hand, then use a socket to push it in the rest of the way.

12. Coat the lip of the seal with steering grease (Honda P/N 08733-B070E).

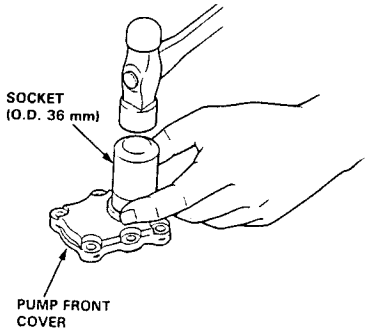

13. Wrap the splined area of the drive gear shaft with vinyl tape and grease the surface of the tape.

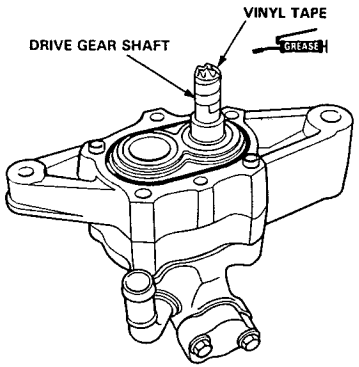

14. Slide the pump front cover over the drive gear shaft, being careful not to damage the sealing lip or dislodge the spring of the oil seal, then remove the vinyl tape.

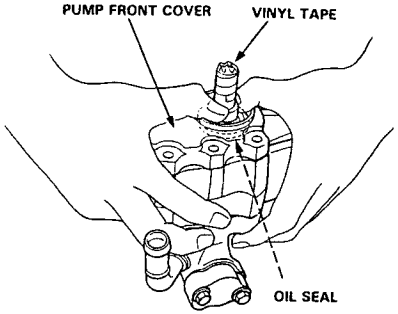

15. Install the flange bolts. Torque them to the specified torque in the order shown.

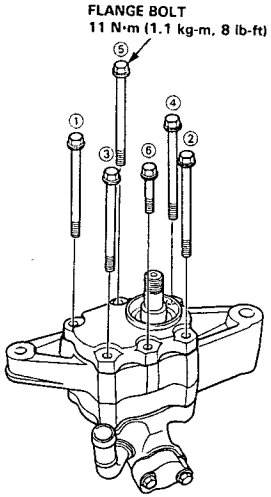

16. Install the flow control valve (see page 17-35).

17. Install the pulley (see page 17-33) and check the pump preload with a torque wrench (see page 17-32).

Steering Gearbox

Gearbox Removal

NOTE: Before removing the steering gearbox, align the front wheels straight ahead.

1. Drain the power steering fluid (see page 17-18).
2. Raise the front of car and support on safety stands in the proper locations (see section 1).
3. Remove the front wheels.
4. Remove the cotter pin from the castle nut and remove the nut.
5. Install the 12 mm hex nut on the ball joint. Be sure that the 12 mm hex nut is flush with the ball joint pin end, or the threaded section of the ball joint pin might be damaged by the ball joint remover.

   NOTE: Remove the ball joint using the Ball Joint Remover. Refer to page 18-10 for how to use the ball joint remover.
6. Separate the tie-rod ball joint and knuckle using the special tool.

   CAUTION: Avoid damaging the ball joint boot.

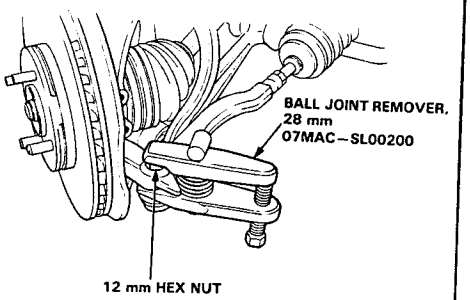

7. Loosen the steering joint bolt. (from the engine compartment.)

   NOTE: Do not remove the bolt at this time.

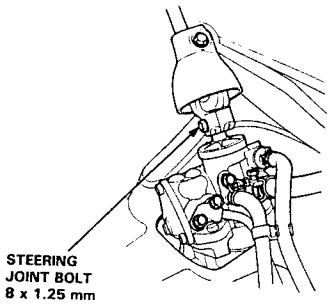

8. Using solvent and a brush, wash any oil and dirt off the valve body unit, its lines, and the end of the gearbox. Blow dry with compressed air.

   CAUTION: After disconnecting the hoses and pipes, plug or seal the hoses and pipes with a piece of tape or equivalent to prevent foreign materials from entering the valve body unit.
9. Remove the 8 mm sensor line by removing the 14 mm flare nut.

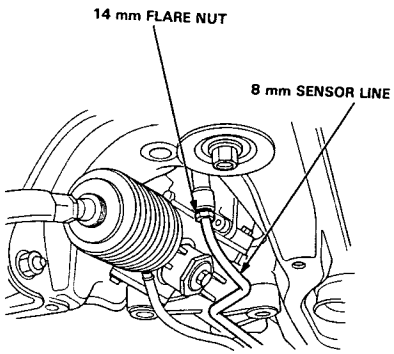

10. Remove the feed pipe joint bolts from the valve body unit.
11. Disconnect the feed line and three hoses from the valve body unit.

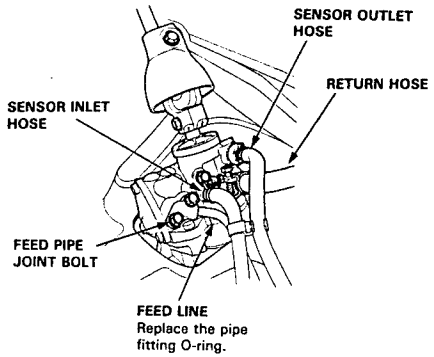

CAUTION: Some splash guard mounting bolts are also used as gearbox mounting bolts. The gearbox will tilt to the side when these bolts are removed. Be sure to remove the steering joint bolt when lowering the gearbox.

12. Remove the splash guard.

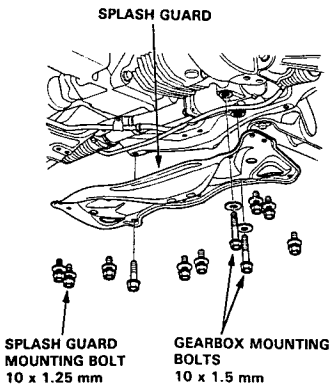

13. Remove the 8 mm sensor line from the gearbox by removing the pipe clip.

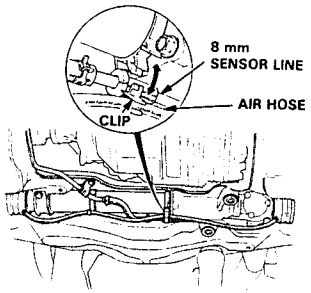

14. Separate the gearbox pinion shaft and column shaft by removing the steering joint bolt.

    NOTE: Before removing the gearbox, place a jack stand under the gearbox.
15. Remove the gearbox mounting bolts and gearbox assembly.

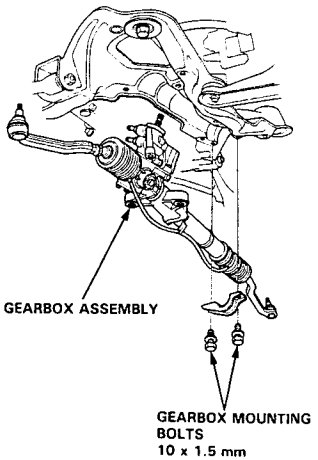

Steering Gearbox

Gearbox Installation

1. Loosely install the mounting bracket with the two gearbox mounting bolts on the right side.

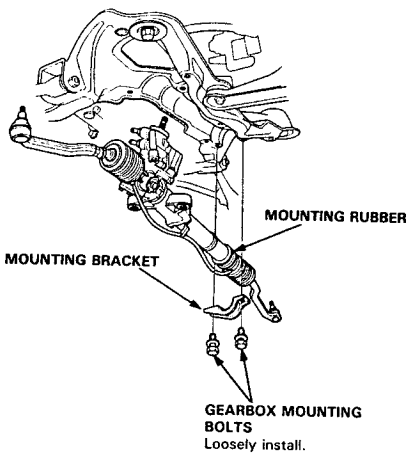

2. Install the 8 mm sensor line on the pipe clip at the gearbox.

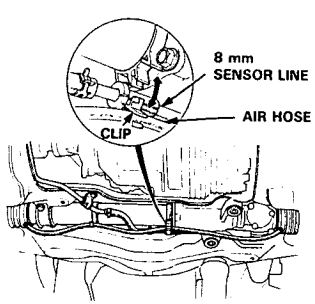

3. Center the steering rack with its strokes.

4. Make sure that the cable reel of the airbag system is centered as follows:

   - Turn the steering wheel left approx. 150 degrees, and check that the cable reel is in position with the indicator.
   - If the cable reel is centered, the yellow gear tooth lines up with the alignment mark in the cover.
   - Return the steering wheel right approx. 150 degrees to position the steering wheel to the straight ahead position.

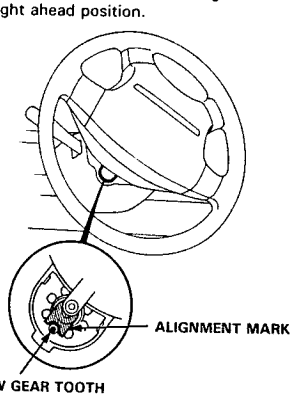

5. Slip the lower end of the steering joint onto the pinion shaft (line up the bolt hole with the groove around the shaft) and loosely install the lower bolt.

   NOTE:
   - Connect the steering joint and pinion shaft with the cable reel and steering rack centered.
   - Be sure that the lower steering joint bolt is securely in the groove in the steering gearbox pinion.

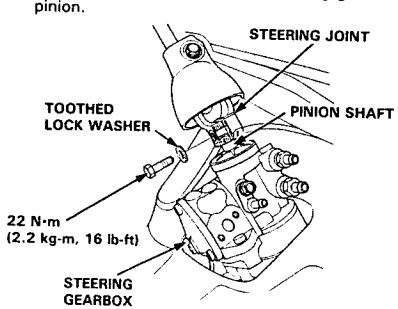

6. Tighten the two grearbox mounting bolts on the right side.

7. Install the splash guard with the two gearbox mounting bolts on the left side.

8. Tighten the splash guard attaching bolts.

   NOTE: Install the bolts loosely first, then tighten them securely.

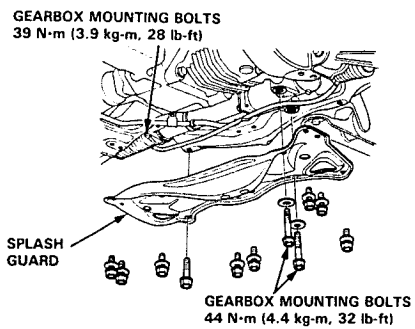

9. Reconnect the feed line and three hoses to the valve body unit as shown below.

10. Install the feed pipe joint bolts to the valve body unit.

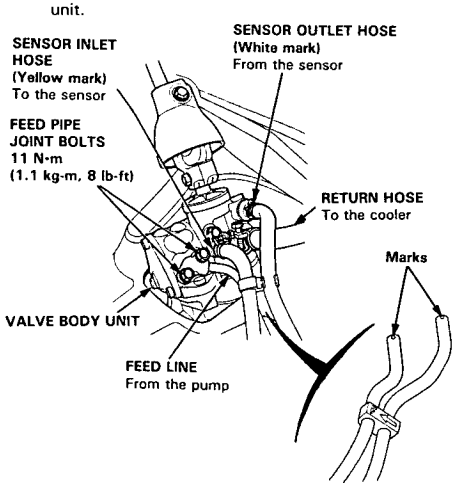

NOTE: Check the hose bands and clip for deformation or deterioration, and replace if necessary.

11. Install the 8 mm sensor line to the valve body unit.

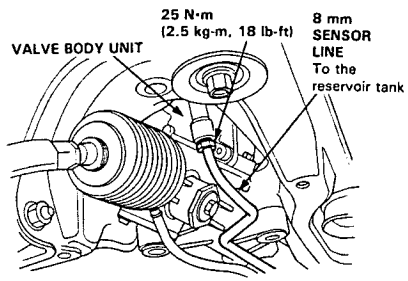

12. Reconnect the tie-rod ends to the steering knuckles, tighten the castle nut to the specified torque, and install new cotter pins.

    CAUTION: Torque the castle nut to the lower torque specification, then tighten it only far enough to align the slot with the pin hole. Do not align the nut by loosening.

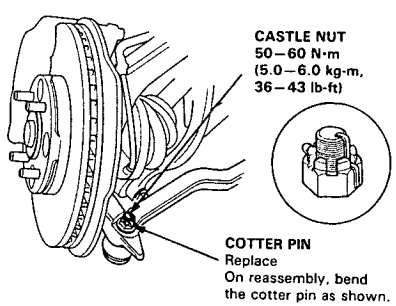

13. Fill the system:
    - Fill the reservoir with new Honda Power Steering Fluid-V.
    - Start the engine and let it run at idle, then turn the steering wheel from lock-to-lock several times to bleed air from the system.
    - Check the fluid again, and add more it necessary.

14. Check the gearbox for leaks.

15. Reinstall the front wheels.

16. Adjust the front toe (see section 18).

    NOTE: If the steering wheel and rack are not centered, reposition the serrations at lower side of the steering joint.

Valve Body Unit Overhaul

1. Remove the steering gearbox (see page 17-40).
2. Remove the pinion dust cover.
3. Remove the two 8 mm flange bolts and remove the valve body unit from the gearbox.
4. Remove the O-rings and port orifices from the gearbox.

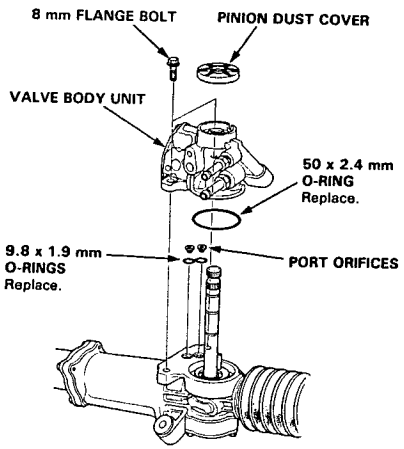

5. Remove the pinion dust seal.

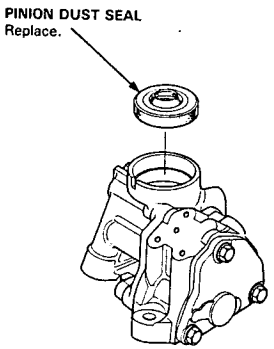

6. Remove the three 6 mm flange bolts, then remove the valve body cap from the valve body.
7. Remove the cap seal from the cap.

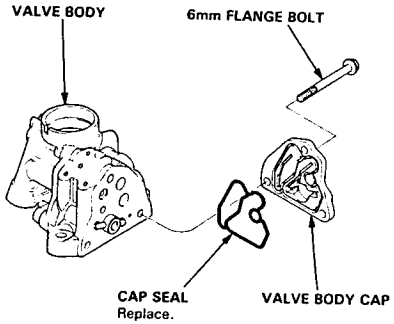

8. Remove the pressure control valve and spring from the valve body.

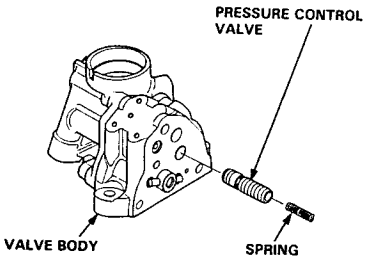

9. Check the pressure control valve:
   - Inspect its surface for scoring or scratches.
   - Slip it back into the valve body, and make sure it slides smoothly without drag and without side play.

   NOTE: If any part of the valve body is damaged, replace the valve body unit (valve body, pressure control valve, gain control valve, 4-way valve) as an assembly.

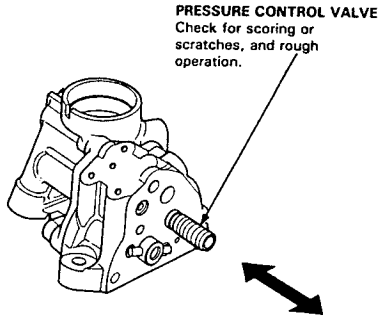

10. Remove the gain control valve and spring from the valve body.

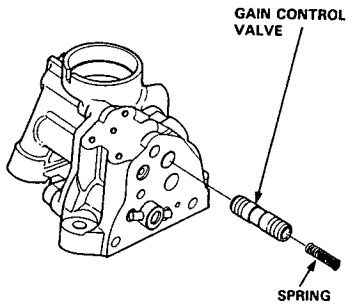

11. Check the gain control valve:
   - Inspect its surface for scoring or scratches.
   - Slip it back into the valve body and make sure it slides smoothly without drag and without side play.

   NOTE: If any part of the valve body is damaged, replace the valve body unit (valve body, pressure control valve, gain control valve, 4-way valve) as an assembly.

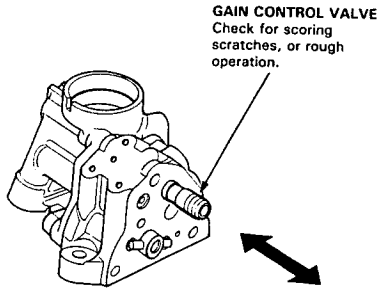

12. Separate the valve body and port housing.
13. Remove the port seal and dowel pins from the port housing.

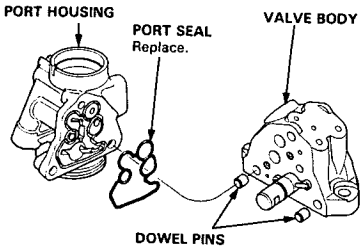

(cont'd)

Valve Body Unit Overhaul (cont'd)

14. Using the 1.0 mm (0.04 in) tooth pick or drill bit, remove the sensor orifice and 3.4 mm O-ring.

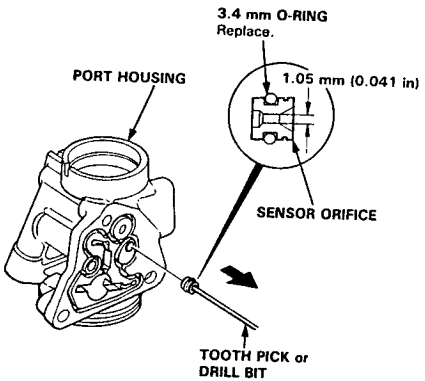

15. Remove the rollers from the 4-way valve by pushing the valve out one side of the valve body, and then the other.

    NOTE: When removing the rollers, hold the plungers with your fingers to keep them from popping out.

16. Remove the plungers, return springs and 4-way valve from the valve body.

17. Remove the 11 mm O-ring from the 4-way valve.

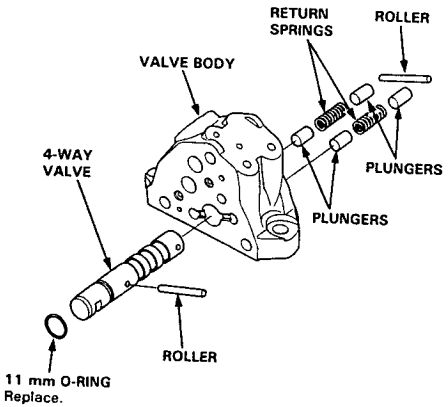

18. Check the plunger.
    - Inspect their surface for scoring or scratches.
    - Slip each plunger into the valve body. Make sure it slides smoothly, without drag or side play. If any plunger is damaged, replace it.

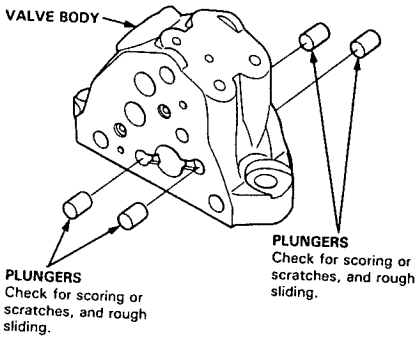

19. Check the 4-way valve.
    - Inspect its surface for scoring or scratches.
    - Slip it into the valve body, and make sure it slides smoothly, without drag or side play.

    NOTE: If any part of the valve body is damaged, replace the valve body unit (valve body, pressure control valve, gain control valve, 4-way valve) as an assembly.

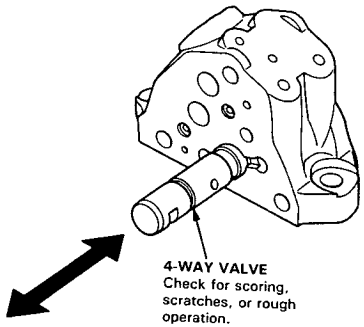

Assembly:

1. Thoroughly clean the disassembled parts shown below.
2. Coat the plungers, pressure control valve, gain control valve and 4-way valve surfaces with power steering fluid.
3. Reassemble the parts in the reverse order of disassembly.

CAUTION:

- **Replace the O-rings and seals with new ones.**
- **Do not dip the O-rings and seals in solvent.**
- **Apply grease in the seal grooves to keep the seals in place.**
- **Apply grease to new O-rings to keep them in place.**

- GREASE : STEERING GREASE Part Number 08733–B070E

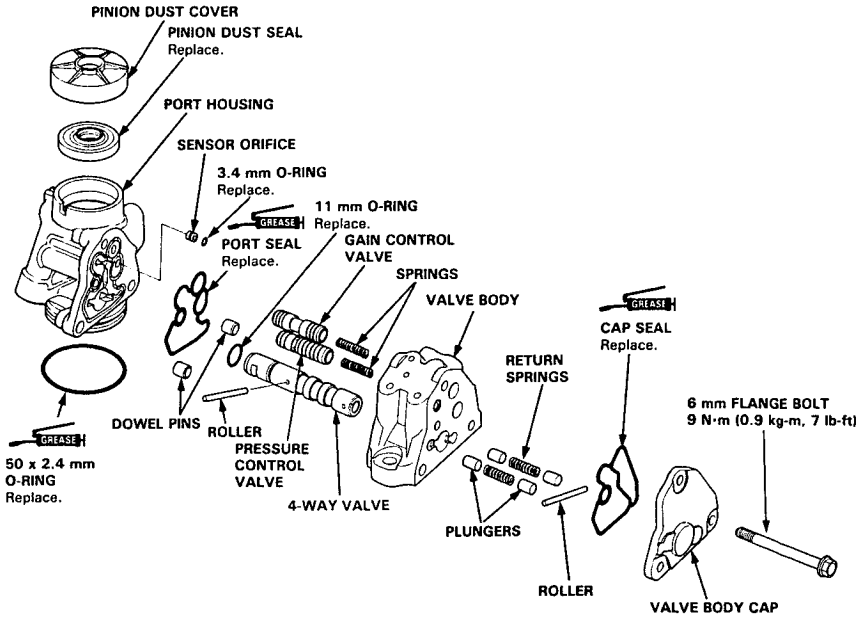

NOTE: If the valve body is damaged, replace the valve body unit (valve body, pressure control valve, gain control valve, 4-way valve) as an assembly.

(cont'd)

Valve Body Unit Overhaul (cont'd)

4. Make sure the 4-way valve moves smoothly, and returns to neutral position.

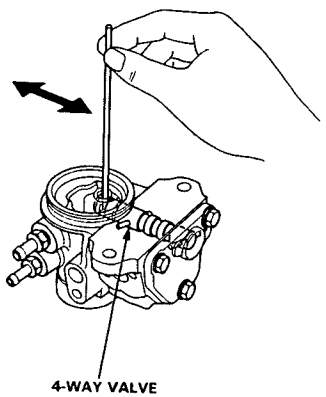

5. Install the new pinion dust seal in the valve body unit by hand.

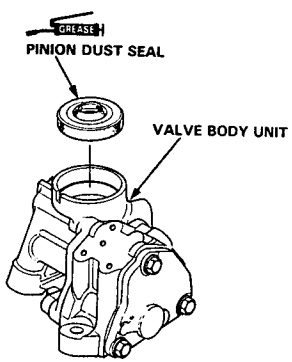

6. Coat the 9.8 x 1.9 mm O-rings with power steering fluid, and install them together with the orifices.

7. Install the special tool, or apply vinyl tape onto the pinion shaft and coat the special tool or vinyl tape with grease.

8. Coat the 50 x 2.4 mm O-ring and pinion holder pin with grease, and install the valve body unit.

9. Install the valve body unit on the gear housing with the two 8 mm flange bolts.

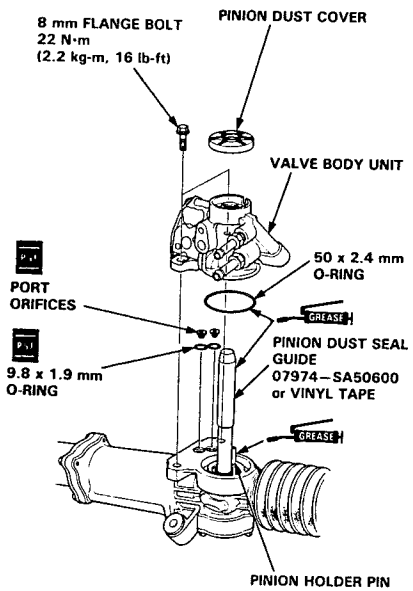

10. Remove the special tool or vinyl tape.

CAUTION:
- **When installing, be careful not to hit the pinion holder pin.**
- **Make sure the O-rings are in place and not pinched.**

Disassembly/Inspection

CAUTION:
- **Before diassembling the gearbox, wash it off with solvent and a brush.**
- **Thoroughly clean all disassembled parts.**
- **Always replace O-rings and seals.**
- **Replace parts with damaged sliding surfaces.**
- **Do not dip seals and O-rings in solvent; coat O-rings with grease or power steering fluid, make sure they stay in position during reassembly, and use appropriate special tools to install them where necessary.**

- GREASE : STEERING GREASE Part Number 08733–B070E

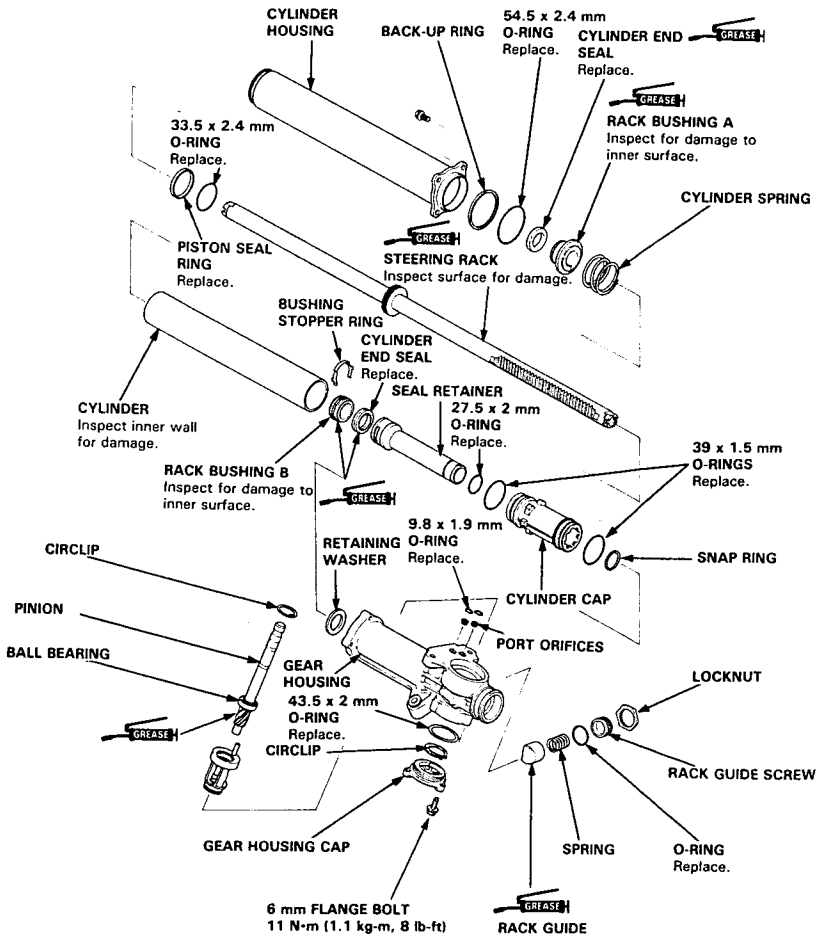

Steering Geabox

Overhaul

1. Remove the valve body unit (see page 17-44).
2. Carefully clamp the gearbox in a vise with soft jaws.
3. Remove the tie-rod ends.

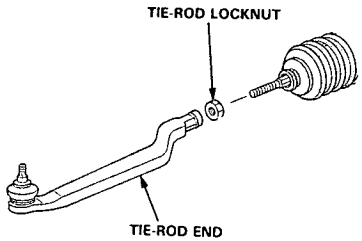

4. Remove the boot bands and tube clamps. Pull the boots away from the ends of the gearbox.

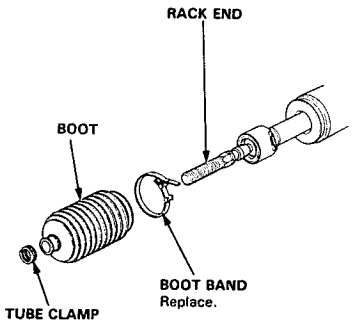

5. Unbend the tie-rod lock washers.
6. Hold the steering rack with a wrench and unscrew the tie-rod with a wrench.

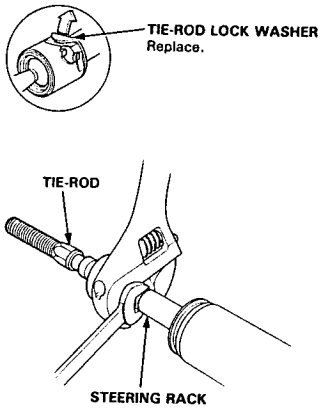

7. Push the right end of the rack back into the cylinder housing so the smooth surface that rides against the seal won't be damaged.

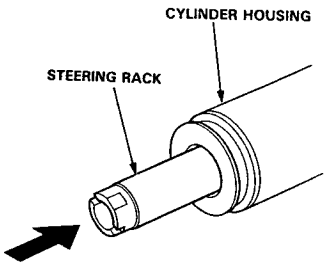

8. Loosen the locknut and remove the rack guide screw.
9. Remove the spring and rack guide from the gear housing.

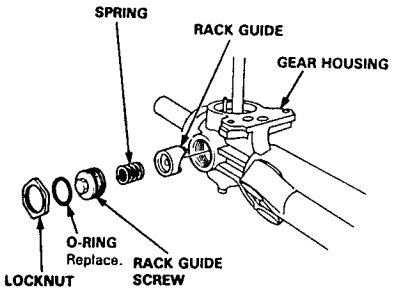

10. Remove the gear housing cap from the gear housing by removing the three 6 mm flange bolts.

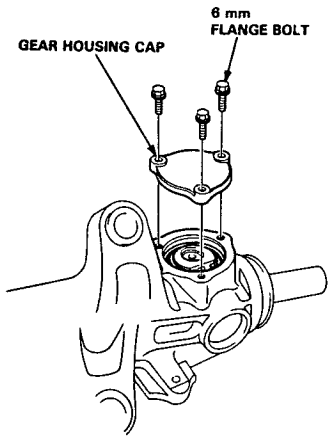

11. Remove the circlip from the bottom of the gear housing.

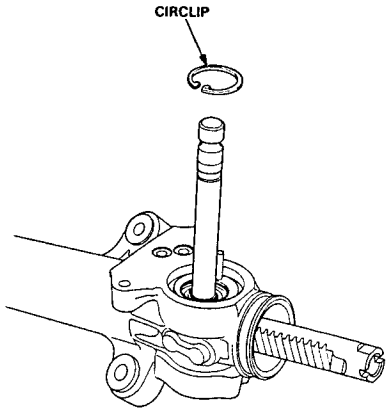

12. Remove the pinion from the gear housing by tapping it lightly with a punch.

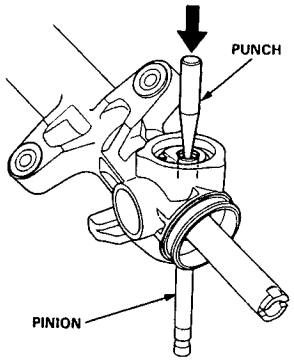

(cont'd)

Overhaul (cont'd)

13. Check the ball bearing of the pinion for play; if it is good, go on step 14.
If the bearing is noisy or has excessive play, replace the bearing.
- Remove the 15 mm snap ring.

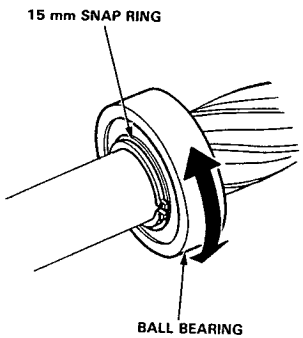

- Remove the ball bearing from the pinion using the special tool.

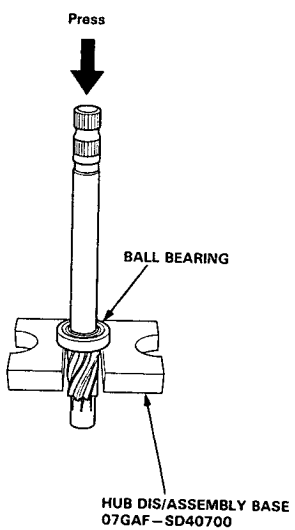

- Using a press and the special tool, install the ball bearing on the pinion.

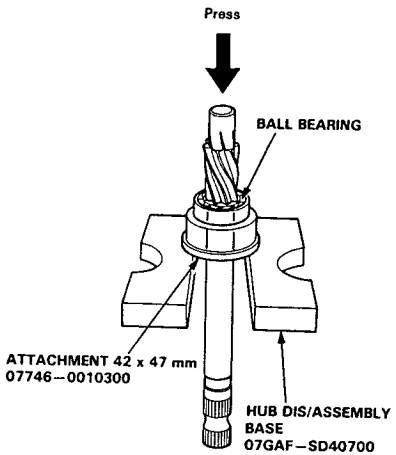

14. Remove the four bolts from the end of the cylinder housing, then slide the housing off the rack.

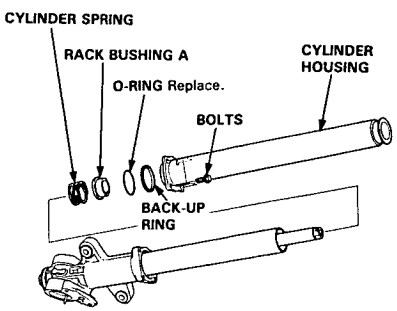

15. Remove the O-ring, back-up ring, rack bushing A and cylinder spring.

16. Remove the cylinder end seal from the cylinder housing.

NOTE: Use your fingers or a wooden stick to avoid damaging the housing.

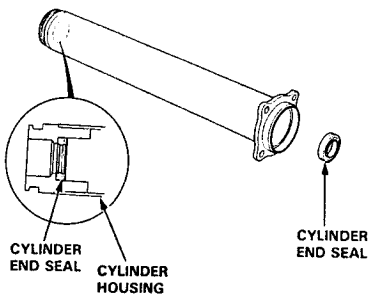

17. Remove the cylinder, cylinder seal retainer, cylinder cap and steering rack from the gear housing.

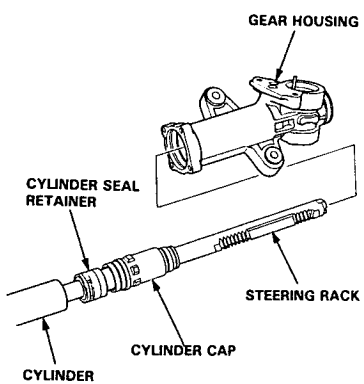

18. Remove the retainer washer from the gear housing.

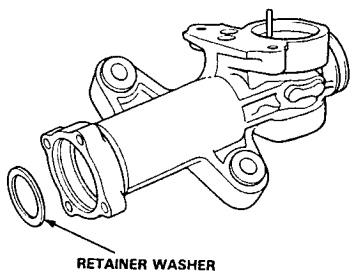

19. Check the pinion holder for free movement, excessive play and rough movement; if it is in good condition, go on step 20.
If it is damaged, or if dirt has gone past the seal into the grease, replace the bearing.
- Remove the circlip from the pinion holder.

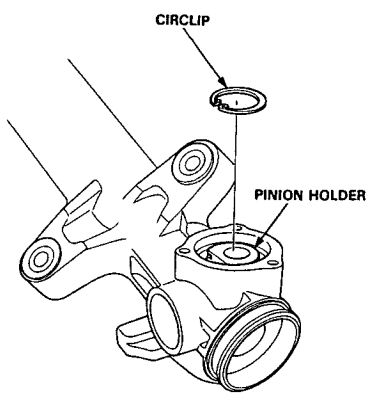

(cont'd)

Overhaul (cont'd)

- Remove the pinion holder from the gear housing.
- Check the needle roller bearings in the pinion holder and gear housing for damage; if OK, pack the needle roller bearing with grease. If the bearings are damaged, replace them as a set.

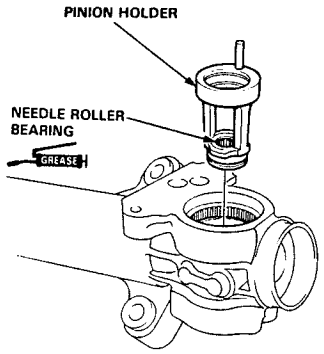

- Check the lower ball bearing for damage; if it is in good condition, go on step 20.
  If it is damaged, replace the lower ball bearing.
- Remove the lower ball bearing from the gear housing.

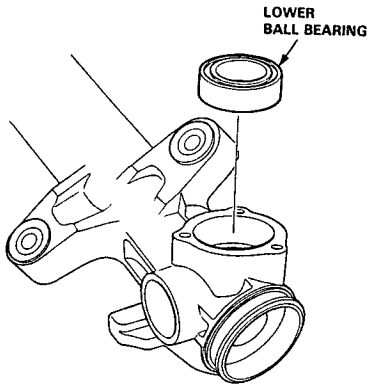

- Drive the new lower ball bearing into the gear housing using the special tools.

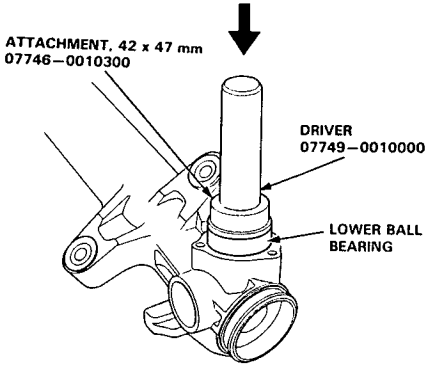

- Pack the needle roller bearings with grease, and install the pinion holder in the gear housing.

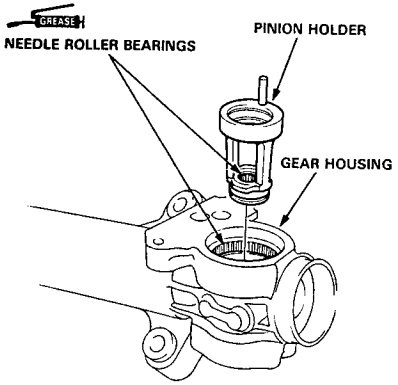

- Reinstall the circlip with its tapered side facing out.

NOTE: Circlip ends must be aligned with the flat area.

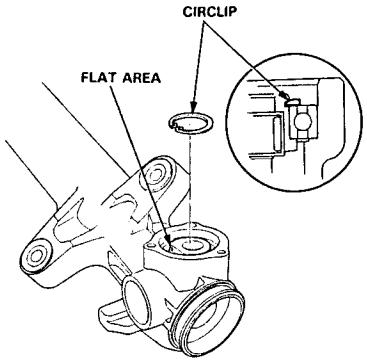

20. Remove the cylinder and seal retainer from the steering rack.

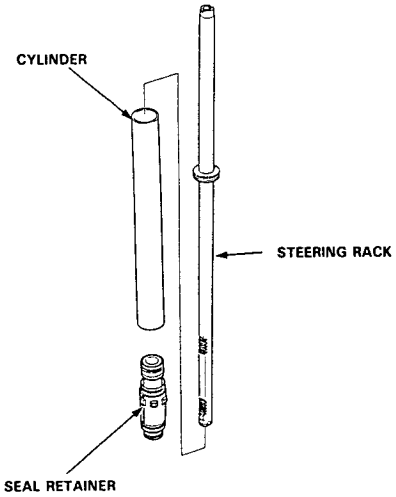

21. Remove the O-ring and snap ring from the seal retainer, then remove the cylinder cap from the seal retainer.
22. Remove the O-rings from the cylinder cap.

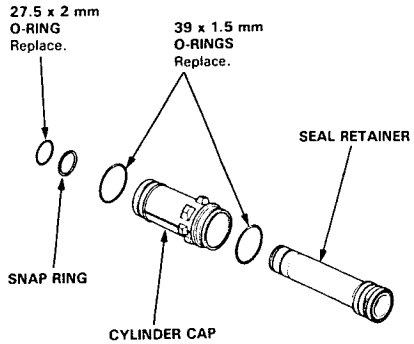

23. Remove the bushing stopper ring from the seal retainer.
24. Remove the cylinder end seal and rack bushing B.

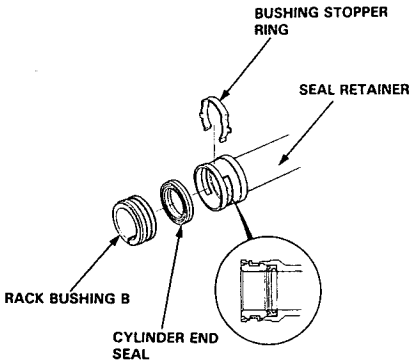

(cont'd)

Overhaul (cont'd)

25. Carefully pry the piston seal ring and the O-ring off the piston.

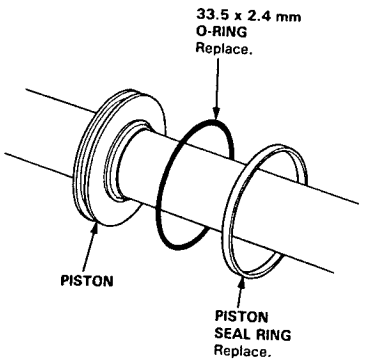

NOTE: Before reassembling any parts, inspect them as described on page 17-49, and make sure they are clean. Replace worn or damaged parts.

26. Install a new O-ring on the piston with its narrow edge facing out.

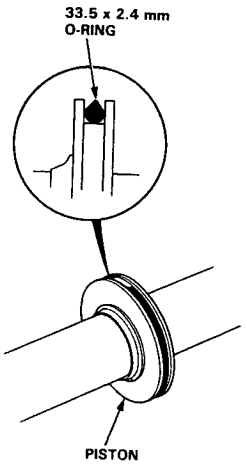

27. Coat the piston seal ring guide with power steering fluid, then slide it onto the rack, big end first.

28. Position the new pistion seal ring on the special tool, slide it down onto the big end of the tool, then pull it off into the pistion groove on top of the O-ring.

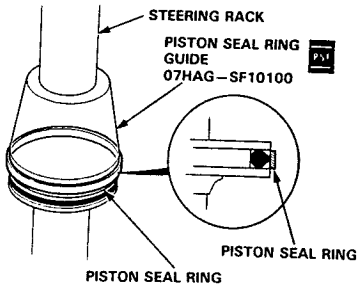

29. Coat the piston seal ring and inside of the special tool with power steering fluid.

30. Carefully slide the tool onto the steering rack and over the piston seal ring, then rotate the tool as you move it up and down to seat the piston seal ring.

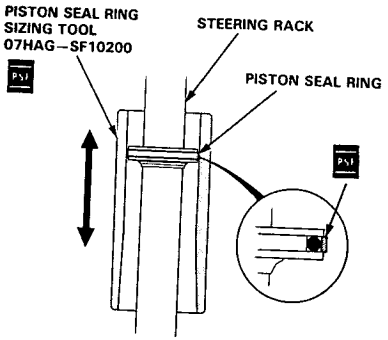

31. Coat the new O-rings with power steering fluid, and install them on the cylinder cap.

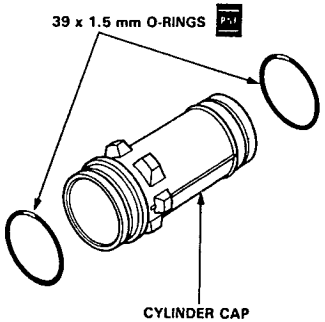

32. Slide the cylinder cap onto the seal retainer.

33. Install the snap ring and O-ring on the seal retainer.

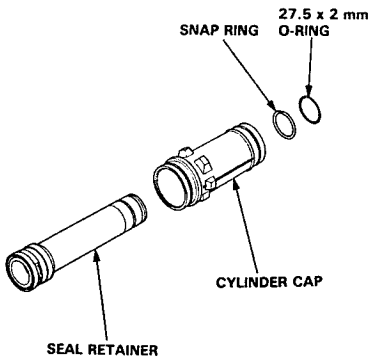

34. Grease the sliding surface of the new rack bushing B, and install the bushing on the steering rack.

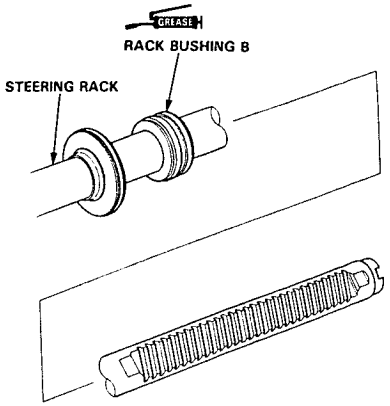

35. Grease the sliding surfaces of the new cylinder end seal and the special tool, then place the seal on the special tool with its grooved side facing opposite the slider.

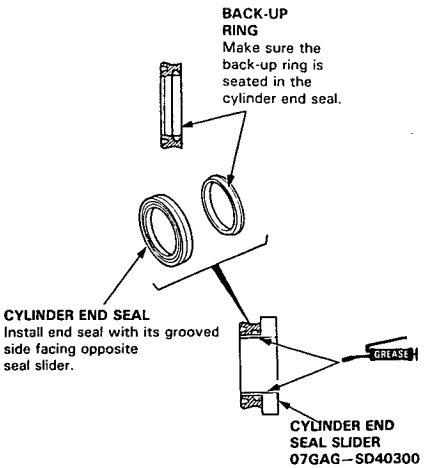

(cont'd)

Overhaul (cont'd)

36. Install the special tool and cylinder end seal.

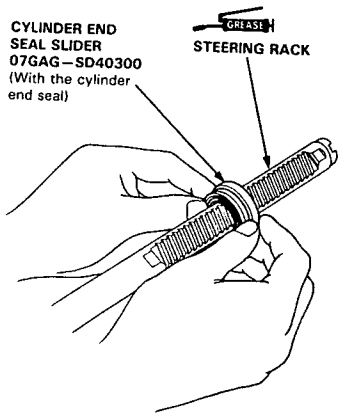

37. Separate the cylinder end seal from the special tool, then remove the special tool from the rack.

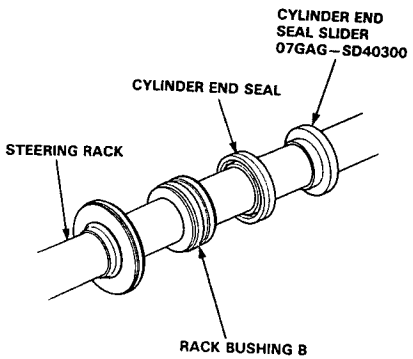

38. Fit the seal retainer on the steering rack.

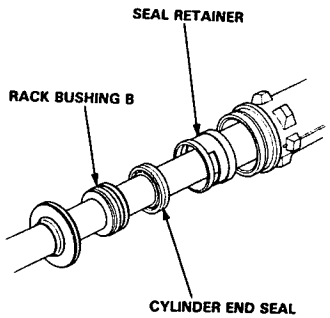

39. Push the rack bushing B toward the seal retainer by hand until the cylinder end seal is seated in the retainer. Fit the bushing stopper ring in the groove of the seal retainer securely. Then grease the steering rack.

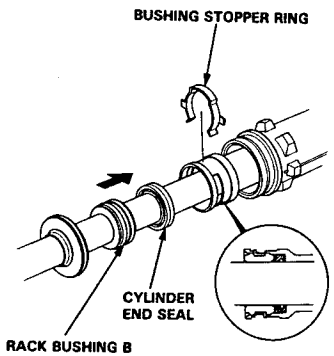

40. Install the retainer washer on the gear housing.

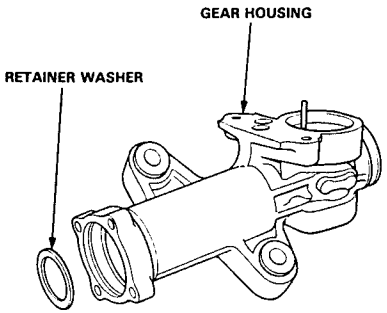

41. Place the gear housing on the work bench and insert the seal retainer and steering rack into the gear housing.

42. Coat the inside surface of the cylinder with power steering fluid, slide it over the rack and into the gear housing; press it into the housing untill it seats.

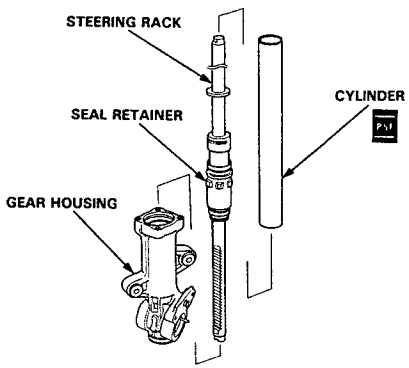

43. Installl the cylinder spring over the rack, then coat the rack bushing A with power steering fluid and install it on the spring.

44. Install the special tool, or apply vinyl tape onto the steering rack and coat the special tool or vinyl tape with grease.

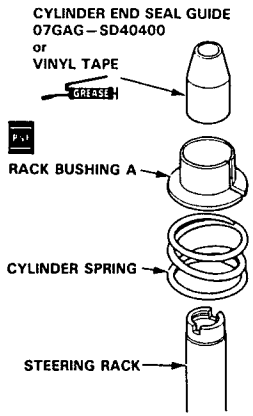

45. Coat the inside surface of the cylinder with power steering fluid and install the cylinder end seal with its grooved side facing out.

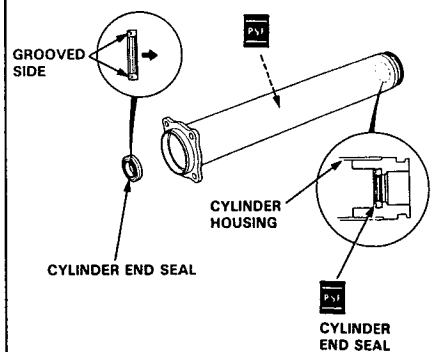

(cont'd)

Overhaul (cont'd)

46. Coat the new O-ring with the grease, then install the O-ring and back-up ring on the gear housing.

47. Carefully position the cylinder housing on the gear housing and loosely install with four bolts.

CAUTION: Be carful not to damage the end seal in the cylinder housing.

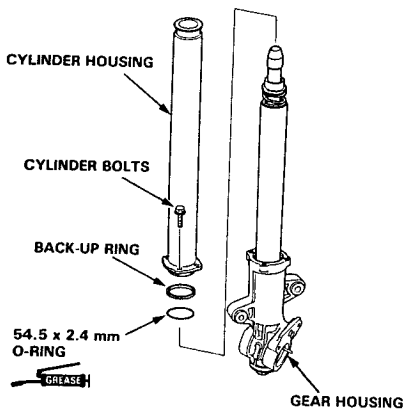

48. Remove the vinyl tape or special tool from the steering rack.

49. Tighten the cylinder housing to the gear housing.

NOTE: Before tightening the bolts, make sure the mating surfaces of the cylinder and gear housing fit properly by pushing them together; hold them together while tightening the bolts.

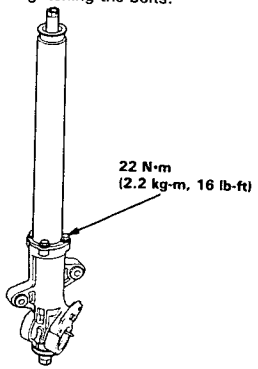

50. Insert the steering rack into the cylinder housing, being careful not ot damage the steering rack sliding surface.

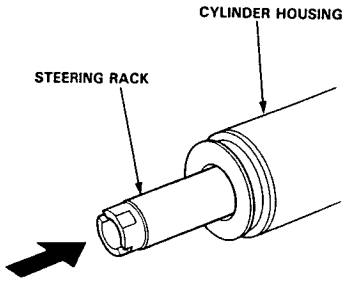

51. Install the steering pinion in the pinion holder by tapping lightly with a rubber mallet.

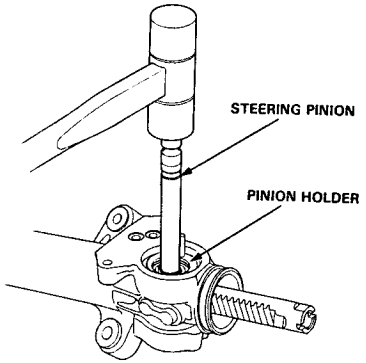

52. Install the circlip securely in the pinion holder groove.

NOTE: Install the circlip with its tapered side facing out.

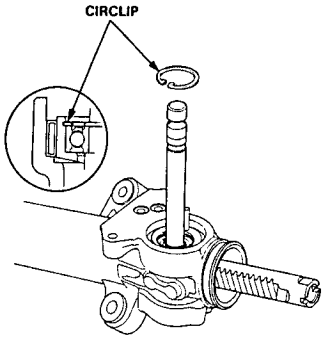

53. Grease the new O-ring and install it in the groove in the gear housing cap.

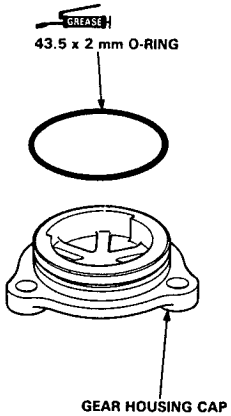

54. Install the gear housing cap on the gear housing.

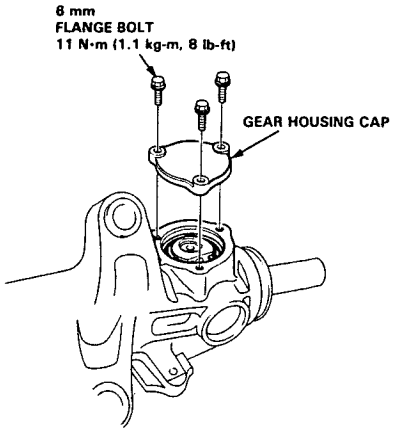

55. Install the O-ring on the rack guide screw.

56. Coat the rack guide with grease.

57. Install the rack guide, spring and rack guide screw on the gear housing.

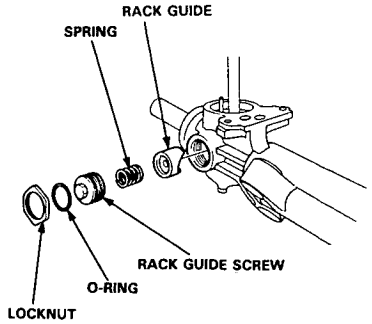

(cont'd)

Overhaul (cont'd)

58. Tighten the rack guide screw until it compresses the spring and seats against the rack guide, then loosen it .

59. Retighten it to 4 N•m (0.4 kg-m, 2.9 lb-ft), back it off about 20 $^{+5°}_{0}$, then install the locknut on the rack guide screw.

60. Tighten the locknut while holding the rack guide screw with the special tool.

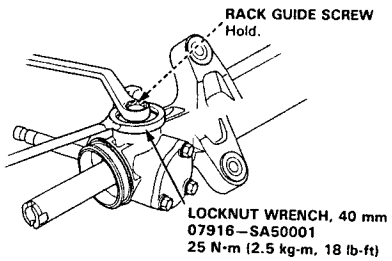

61. Coat the 9.8 x 1.9 mm O-rings with power steering fluid, and install them together with the orifices.

62. Install the special tool, or apply vinyl tape onto the pinion shaft and coat the special tool or vinyl tape with grease.

63. Coat the 50 x 2.4 mm O-ring and pinion holder pin with grease, then install the valve body unit.

64. Install the valve body unit on the gear housing with the two 8 mm bolts.

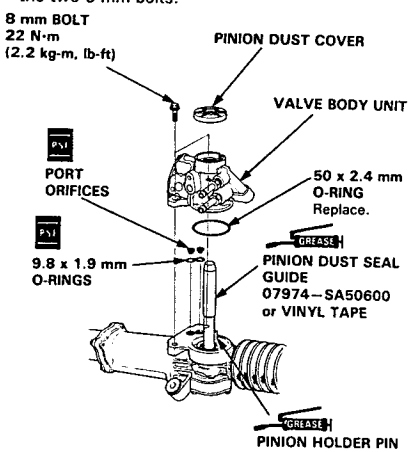

CAUTION:
- **When installing, be careful not to hit the pinion holder pin.**
- **Make sure the O-rings are in place and not pinched.**

65. Remove the special tool or vinyl tape and install the pinion dust cover.

66. Install the new lock washer in the groove in the steering rack.

67. Hold the steering rack with a wrench and tighten the rack end to 65 N•m (6.5 kg-m, 47 lb-ft). Then bend the lock washer back against the flat on the flange as shown.

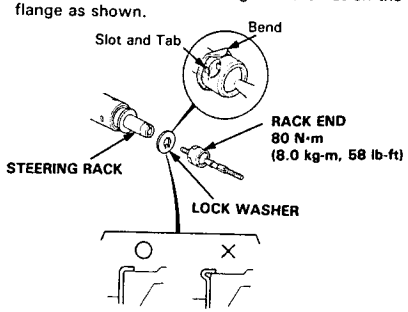

NOTE: Bend the lock washer tab securely. Make sure it fits against the rack end tightly, as shown.

68. Apply grease to the circumference of the rack end housing.

69. Install the boots on the rack end with the tube clamps.

NOTE: Coat the rack end groove and inside of the boot with silicone grease.

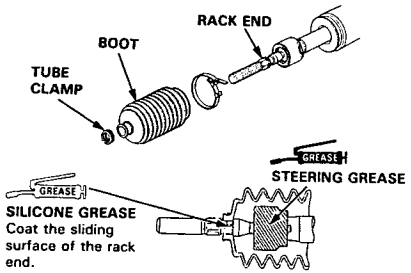

NOTE: Install the boot band with the rack in the straight ahead position (i.e. right and left tie-rods are equal in length).

70. Install the boot band so that the locking tabs of the band (stake points) are in the range shown below. (Tabs should face up and slightly forward.)

CAUTION: Stake the band locking tabs firmly.

71. Install new boot bands on the boot and bend both sets of locking tabs.

72. Lightly tap on the doubled-over portions to reduce their height.

73. Install the band cushion and air hose band; position the band as shown and tighten it. Then install the air hose.

74. After assembling, slide the rack right and left to be certain that the boots are not deformed or twisted.

75. Install the right and left tie-rod ends on the right and left rack ends.

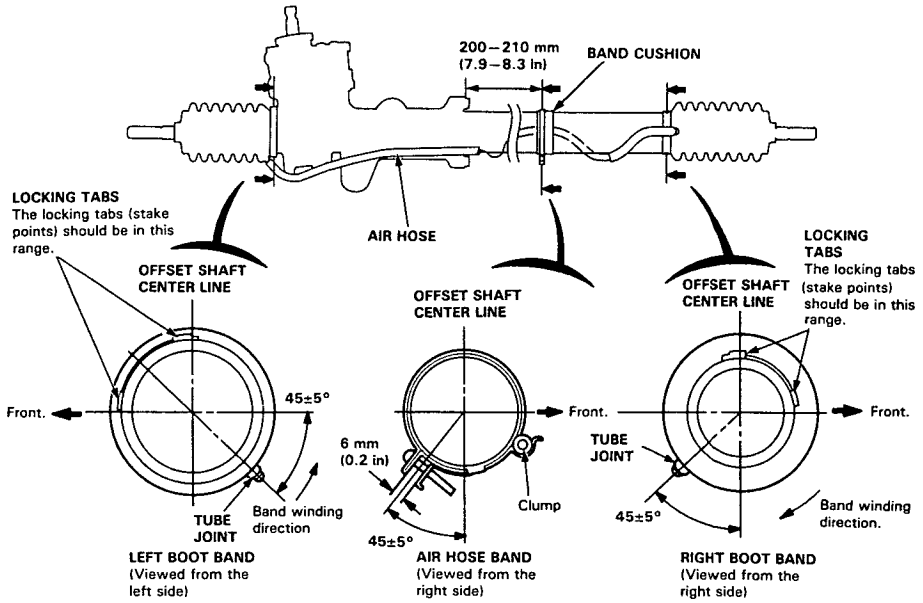

Suspension

Special Tools 18-2
Component Location
  Index 18-3
Wheel Alignment
  Caster 18-4
  Camber 18-5
  Front Toe Inspection/
    Adjustment 18-5
  Rear Toe Inspection/
    Adjustment 18-6
  Turning Angle Inspection/
    Adjustment 18-6
Wheel Measurements
  Bearing End Play 18-7
  Runout 18-7
Front Suspension
  Torque Specifications 18-8
  Knuckle/Hub
    Illustrated Index 18-9
    Removal 18-10
    Installation 18-15
  Lower Ball Joint Replacement 18-16
  Ball Joint Boot Replacement 18-16
  Suspension Arms
    Removal/Inspection 18-17
    Installation 18-18
Front Damper
  Removal 18-19
  Disassembly/Inspection 18-19
  Reassembly 18-21
  Installation 18-21
Rear Suspension
  Torque Specifications 18-22
  Hub Bearing Unit
    Illustrated Index 18-23
    Removal 18-24
    Installation 18-25
  Suspension Arms
    Removal/Inspection 18-26
    Installation 18-27
Rear Damper
  Removal 18-28
  Disassembly/Inspection 18-28
  Reassembly 18-30
  Installation 18-30
Damper Disposal 18-31

Special Tools

Ref. No.	Tool Number	Description	Qty	Page Reference
①	07GAF–SD40700	Hub Dis/Assembly Base	2	18-13
②	07GAF–SD40310	Ball Joint Remover Base	1	18-16
③	07GAF–SD40320	Ball Joint Installer Base	1	18-16
④	07GAF–SD40330	Ball Joint Remover/Installer	1	18-16
⑤	07GAF–SE00100	Hub Dis/Assembly Tool	1	18-13, 14
⑥	07GAF–SE00200	Hub Assembly Guide Attachment	1	18-14
⑦	07GAG–SD40700	Ball Joint Boot Clip Guide	1	18-16
⑧	07MAC–SL00100	Ball Joint Remover, 32 mm	1	18-10, 11
⑨	07MAC–SL00200	Ball Joint Remover, 28 mm	1	18-10, 11, 12, 26
⑩	07MAG–SL00100	Ball Joint Boot Clip Guide	1	18-16
⑪	07749–0010000	Driver	1	18-14
⑫	07965–SD90100	Support Base	1	18-13, 14

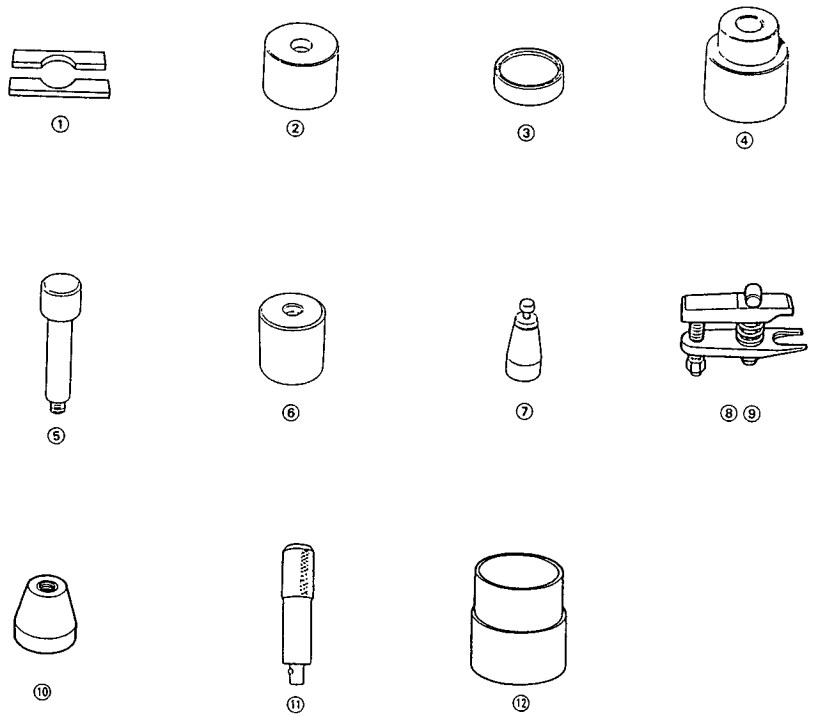

Component Location

Index

WARNING The front and rear dampers contain nitrogen gas and oil under pressure. The pressure must be relieved before disposal to prevent explosion and possible injury when scrapping.

Wheel Alignment, page 18-4

Front Suspension:

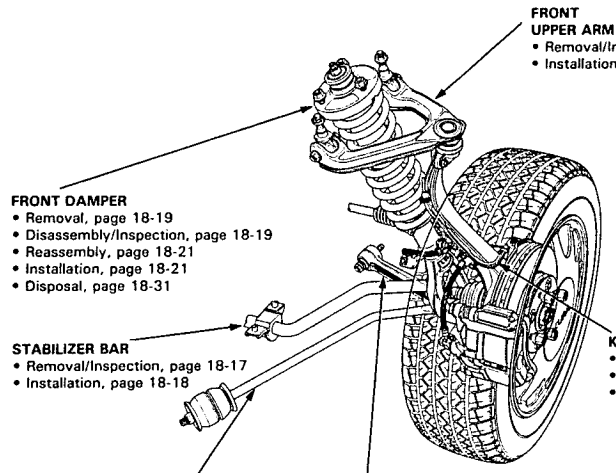

FRONT UPPER ARM
- Removal/Inspection, page 18-17
- Installation, page 18-18

FRONT DAMPER
- Removal, page 18-19
- Disassembly/Inspection, page 18-19
- Reassembly, page 18-21
- Installation, page 18-21
- Disposal, page 18-31

STABILIZER BAR
- Removal/Inspection, page 18-17
- Installation, page 18-18

KNUCKLE/HUB
- Removal, page 18-10
- Bearing Replacement, page 18-12
- Installation, 18-15

RADIUS ROD
- Removal/Inspection, page 18-17
- Installation, page 18-18

FRONT LOWER ARM
- Removal/Inspection, page 18-17
- Installation, page 18-18

Rear Suspension:

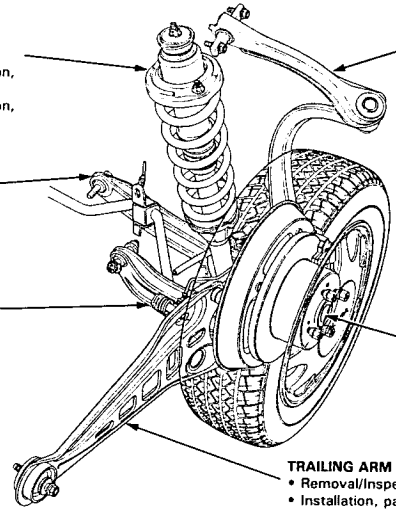

REAR DAMPER
- Removal, page 18-28
- Disassembly/Inspection, page 18-28
- Reassembly/Installation, page 18-30
- Disposal, page 18-31

REAR UPPER ARM
- Removal/Inspection, page 18-26
- Installation, page 18-27

REAR LOWER ARM B
- Removal/Inspection, page 18-26
- Installation, page 18-27

REAR LOWER ARM A
- Removal/Inspection, page 18-26
- Installation, page 18-27

HUB BEARING UNIT
- Removal, page 18-24
- Installation, page 18-25

TRAILING ARM
- Removal/Inspection, page 18-26
- Installation, page 18-27

Wheel Alignment

Caster

NOTE: For proper inspection/adjustment of the wheel alignment, check and adjust the following before checking the alignment.

- Check that the suspension is not modified.
- Check the tire size and tire pressure.
- Check the runout of the wheels and tires.
- Check the suspension ball joints. (Hold a wheel with your hands and move it up and down and right and left to check for wobbling.)

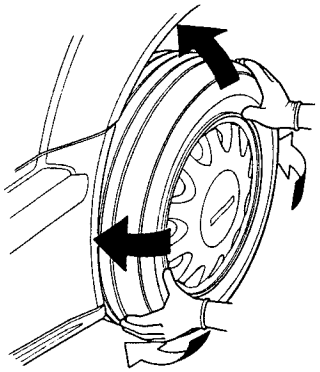

Inspection

NOTE: Use commercially available computerized four wheel alignment equipment to measure wheel alignment (i.e. caster, camber, toe and/or turning angle). Follow the equipment manufacturer's instructions.

1. Check the tire pressure.
2. Check the steering wheel angle; If significantly off center, it may be necessary to remove the steering wheel and reposition it on the splines. Turn the steering wheel to the straight ahead position.
3. Check the caster angle.

   Caster angle: 1°38'±1°

4. If adjustment is required, record the caster reading, then go to step 5. If adjustment is not required, remove the alignment equipment.

   NOTE: Caster angle can be adjusted by increasing/decreasing the number of the adjusting shims. Remove and install the radius rod each time the caster angle is adjusted.

5. Raise the front end of the car.
6. Remove the self-locking nut on the end of the radius rod.
7. Remove the self-locking bolts at the radius rod on the lower arm, and remove the radius rod (see page 18-17).
8. Adjust the caster angle by increasing/decreasing the adjusting shims.

   NOTE:
   - Do not use more than two adjusting shims.
   - One adjusting shim changes the caster angle by 25' and the caster angle can be adjusted by 50' maximum.
   - One adjusting shim is 3.2 mm (0.13 in) in thickness.

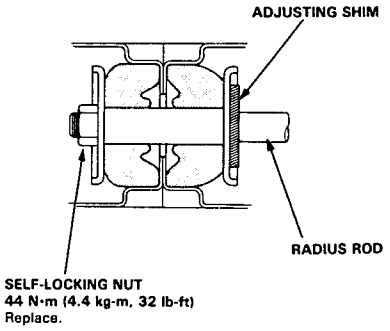

9. After the adjustment, install the radius rod onto the lower arm, and tighten the self-locking bolts.
10. Tighten the new self-locking nut to specified torque.

Camber

Inspection

NOTE: Use commercially available computerized four wheel alignment equipment to measure wheel alignment (i.e. caster, camber, toe, and/or turning angle). Follow the equipment manufacturer's instructions.

1. Check the tire pressure.
2. Check the steering wheel angle. If significantly off center, it may be necessary to remove the steering wheel and reposition it on the splines. Turn the steering wheel to the straight ahead position.
3. Check the camber angle.

   Camber angle, Front: 0°00'±1°
   Rear: −0°30'±1°

4. If out of specification, check for bent or damaged suspension components.

Front Toe Inspection/Adjustment

NOTE: Use commercially available computerized four wheel alignment equipment to measure wheel alignment (i.e. caster, camber, toe, and/or turning angle). Follow the equipment manufacturer's instructions.

1. Check the tire pressure.
2. Center the steering wheel spokes.
3. Check the toe with the wheels pointed straight ahead.

   Front toe: 0±2.0 mm (0±0.08 in)

   — If adjustment is required, go on to step 4.

   — If no adjustment is required, remove the alignment equipment.

4. Loosen the tie-rod locknuts, and turn both tie-rods in the same direction until the front wheels are in the straight ahead position.
5. Turn both tie-rods equally until the toe reading on the turning radius gauge is correct.
6. After adjusting, tighten the tie-rod locknuts.

   NOTE: Reposition the tie-rod boot if it is twisted or displaced.

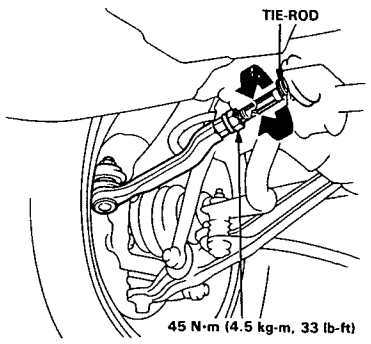

Wheel Alignment

Rear Toe Inspection/Adjustment

NOTE: Use commercially available computerized four wheel alignment equipment to measure wheel alignment (i.e. caster, camber, toe, and/or turning angle). Follow the equipment manufacturer's instructions.

1. Release parking brake.

   NOTE:
   - Measure difference in toe measurements with the wheels pointed straight ahead.
   - If the parking brake is engaged, you may get an incorrect reading.

   Rear toe-in: 3.0±2.0 mm (0.12±0.08 in)

   — If adjustment is required, go to step 2.

   — If no adjustment is required, remove alignment equipment.

2. Hold the adjusting bolt on the rear lower arm A and loosen the self-locking nut.

3. Adjust the rear toe by turning the adjusting bolt until toe is correct.

4. Install the self-locking nut and tighten while holding the adjusting bolt.

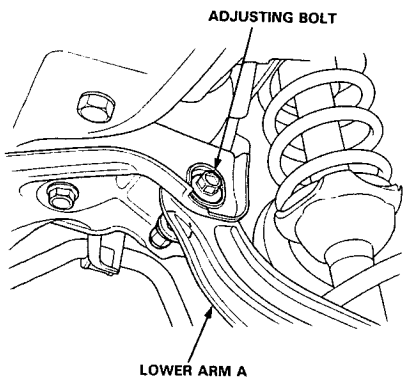

Turning Angle Inspection/ Adjustment

NOTE: Use commercially available computerized four wheel alignment equipment to measure wheel alignment (i.e. caster, camber toe, and/or turning angle). Follow the equipment manufacturer's instructions.

1. Jack up the front of the car. Set the turning radius gauges beneath the front wheels, then lower the car.
2. Jack up the rear of the car. Place boards that are the same thickness as the turning radius gauges under the rear wheels, then lower the car.

   NOTE: For accurate readings, the car must be level.

3. Turn the wheel right and left while applying the brake, and measure the turning angle of both wheels.

   Turning angle:
   Inward wheel: 39°24'±2°
   Outward wheel: 33°36' (reference)

4. If the measurements are not within the specifications, adjust as required by turning the tie-rods.

   NOTE: After adjusting, recheck the front wheel toe and readjust if necessary. Reposition the tie rod boot if twisted or displaced.

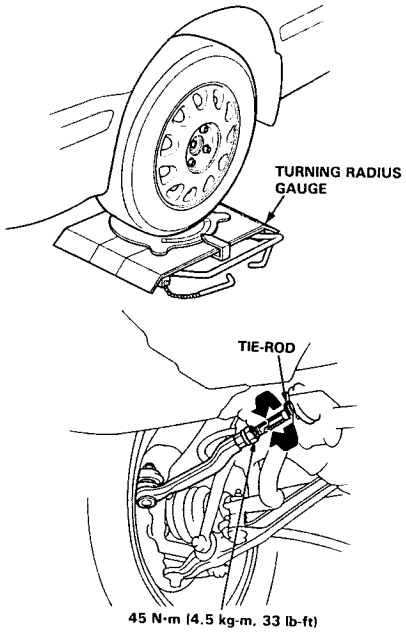

Wheel Measurements

Bearing End Play

1. Raise the car, and support it with safety stands in the proper locations (see section 1).
2. Remove the wheels, then reinstall the wheel nuts.
3. Attach the dial gauge as shown.
4. Measure the bearing end play by moving the disc in and out.

   Front Wheel End Play:

   Standard: 0—0.05 mm (0—0.002 in)

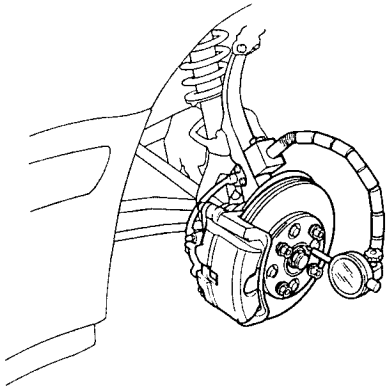

Rear Wheel End Play:

Standard: 0—0.05 mm (0—0.002 in)

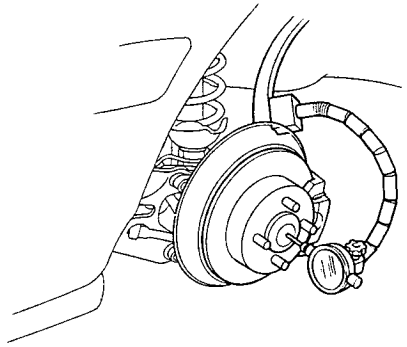

5. If the bearing end play measurement is more than the standard, replace the wheel bearing.

Runout

1. Raise the car, and support it with safety stands in the proper locations (see section 1).
2. Check for bent or deformed wheels.
3. Attach the dial gauge as shown.
4. Measure the wheel runout by turning the wheel.

   Front and Rear Wheel Axial Runout:

   Standard:
   Steel Wheel: 0—1.0 mm (0—0.04 in)
   Aluminum Wheel: 0—0.7 mm (0—0.03 in)
   Service Limit: 2.0 mm (0.08 in)

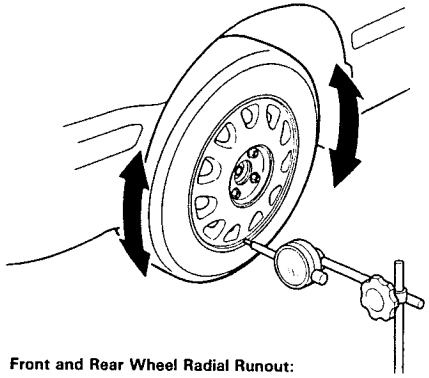

Front and Rear Wheel Radial Runout:

Standard:
Steel Wheel: 0—1.0 mm (0—0.04 in)
Aluminum Wheel: 0—0.7 mm (0—0.03 in)
Service Limit: 1.5 mm (0.06 in)

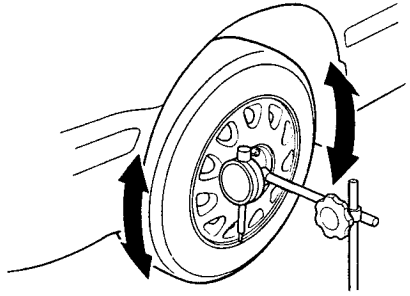

5. If the wheel runout is more than the service limit, replace the wheel.

Front Suspension

Torque Specifications

CAUTION:
- Replace the self-locking nuts after removal.
- Replace the self-locking bolts if you can easily thread a non-self-locking nut past their nylon locking inserts. (It should require 1 N·m (0.1 kg-m, 0.7 lb-ft) of torque to turn the nut on the bolt).
- The vehicle should be on the ground before any bolts or nuts connected to rubber mounts or bushing are tightened.
- Torque the castle nut to the lower torque specification, then tighten it only far enough to align the slot with the pin hole. Do not align the nut by loosening.

NOTE: Wipe off the grease before tightening the nut at the ball joint.

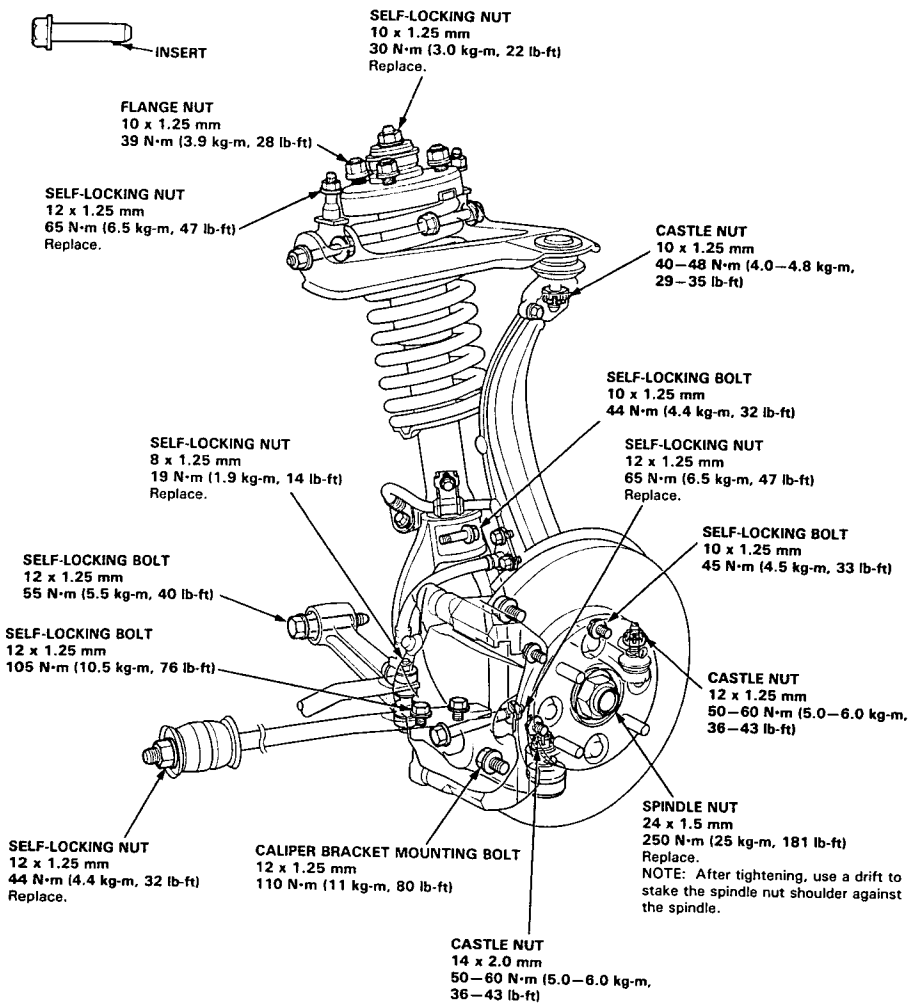

Knuckle/Hub

Illustrated Index

NOTE:
- Use only genuine Honda wheel weights for aluminum wheels. Non-genuine wheel weights may corrode and damage the aluminum wheels.
- For aluminum wheels, remove the center cap by prying it out with a flat screwdriver. Use a rag at the point you are going to pry because aluminum alloy wheels can be easily damaged. Avoid damage to the cap by not allowing it to fall during removal.
- Before installing the brake disc, clean the mating surfaces of the front hub and inside of the brake disc.
- Before installing the wheel, clean the mating surfaces of the brake disc and inside of the wheel.

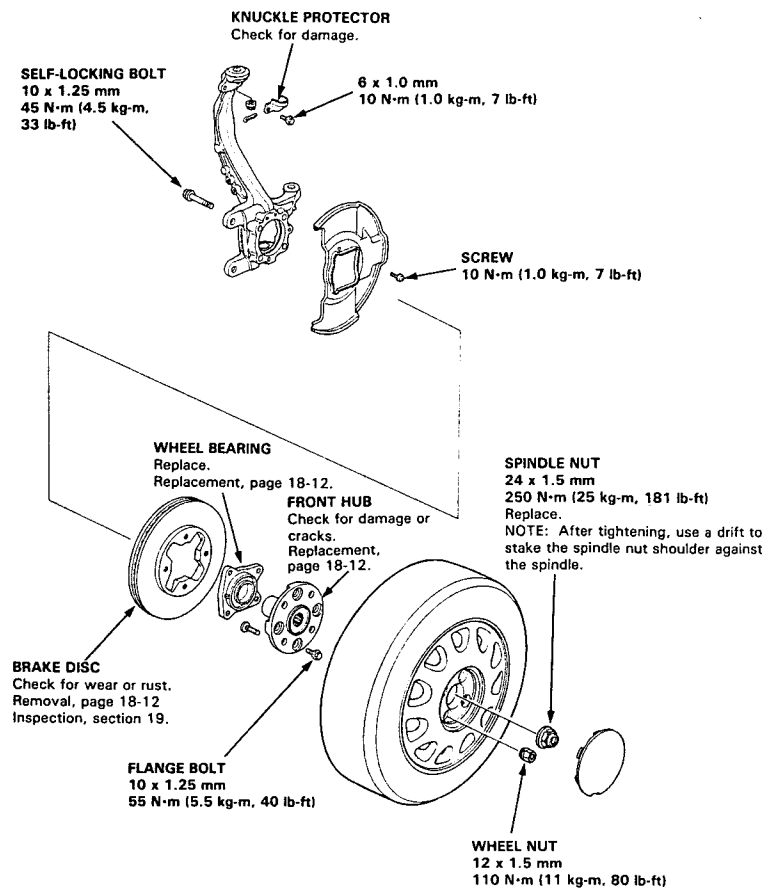

Knuckle/Hub

Removal

1. Raise the locking tab on the spindle nut, then remove the nut.
2. Loosen the wheel nuts slightly.
3. Raise the front of the car, and support it with safety stands in the proper locations (see section 1).
4. Remove the wheel nuts and front wheel.

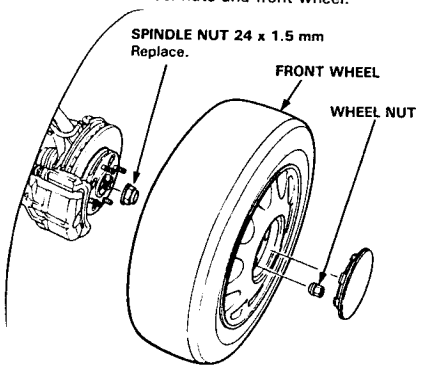

5. Remove the mounting bolt for the brake hose bracket.
6. Remove the caliper bracket mounting bolts and hang the caliper assembly to one side.

CAUTION: To prevent accidental damage to the caliper assembly or brake hose, use a short piece of wire to hang the caliper assembly from the undercarriage.

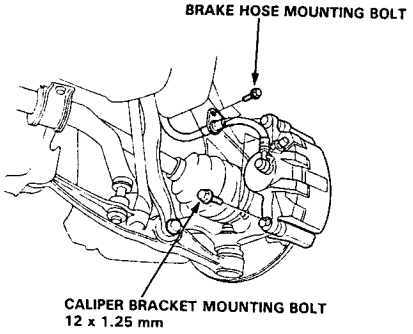

7. Remove the wheel sensor wire bracket, then remove the wheel sensor from the knuckle.

NOTE: Do not disconnect the wheel sensor wire.

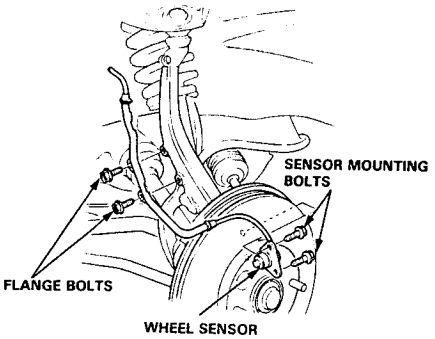

8. Clean any dirt or grease off the ball joint.
9. Remove the cotter pin from the steering arm and remove the nut.
10. Apply grease to the special tool on the areas shown. This will ease installation of the tool and prevent damage to the pressure bolt threads.

CAUTION: Be careful not to damage the ball joint boot.

NOTE: Use ball joint removers, to separate the ball joints from the suspension or steering arm.

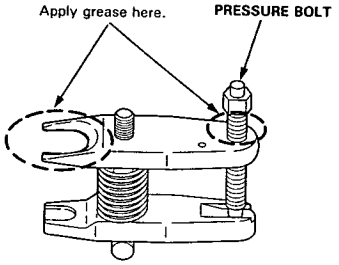

11. Install a 12 mm hex nut on the ball joint. Be sure that the hex nut is flush with the ball joint pin end to prevent damage to the threaded end of the ball joint.
12. Use the ball joint remover as shown. Insert the jaws carefully, making sure you do not damage the ball joint boot. Adjust the jaw spacing by turning the pressure bolt.

NOTE: If necessary, apply penetrating type lubricant to loosen the ball joint.

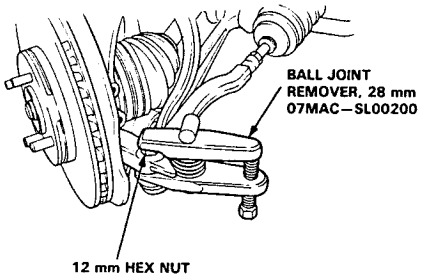

13. Once the tool is in place, turn the adjusting bolt as necessary to make the jaws parallel. Then hand-tighten the pressure bolt and recheck the jaws to make sure they are still parallel.

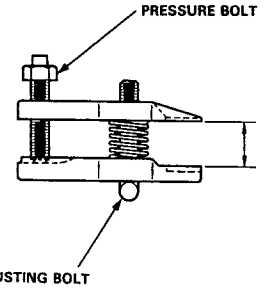

14. With a wrench, tighten the pressure bolt until the ball joint shaft pops loose from the steering arm.

⚠WARNING Wear eye protection. The ball joint can break loose suddenly and scatter dirt or other debris in your eyes.

15. Remove the tool, then remove the nut from the end of the ball joint and pull the ball joint out of the steering/suspension arm. Inspect the ball joint boot and replace it if damaged.
16. Remove the cotter pin and lower arm ball joint nut.
17. Install a 14 mm hex nut on the ball joint. Be sure that the hex nut is flush with the ball joint pin end, or the threaded section of the ball joint pin might be damaged by the ball joint remover.
18. Use the ball joint remover as shown on page 18-10 to separate the ball joint and lower arm.

NOTE: If necessary, apply penetrating type lubricant to loosen the ball joint.

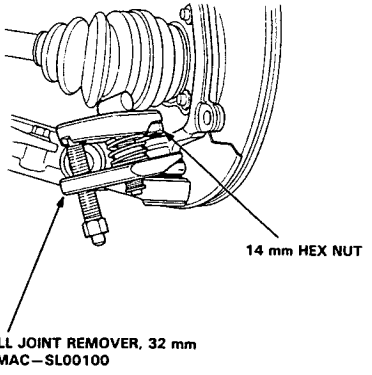

(cont'd)

Knuckle/Hub (cont'd)

19. Remove the knuckle protector.

20. Remove the cotter pin and the upper ball joint nut.

21. Install a 10 mm hex nut on the ball joint.
Be sure that the hex nut is flush with the ball joint pin end, or the threaded section of the ball joint pin might be damaged by the ball joint remover.

22. Use the ball joint remover as shown on page 18-10 to separate the ball joint and knuckle.

NOTE: If necessary, apply penetrating type lubricant to loosen the ball joint.

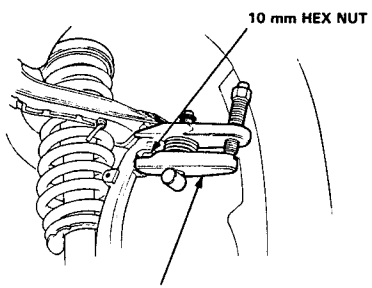

23. Pull the knuckle outward and remove the driveshaft outboard joint from the knuckle using a plastic hammer, then remove the knuckle.

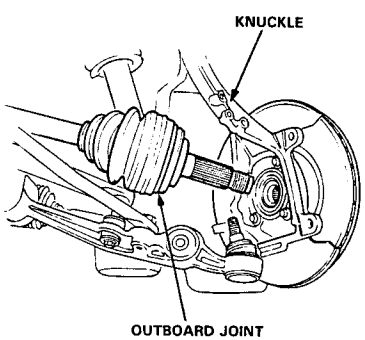

Hub Unit Removal and Wheel Bearing Replacement

24. Remove the knuckle from the hub unit.

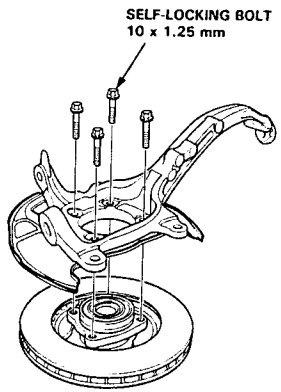

25. Remove the splash guard screws from the knuckle.

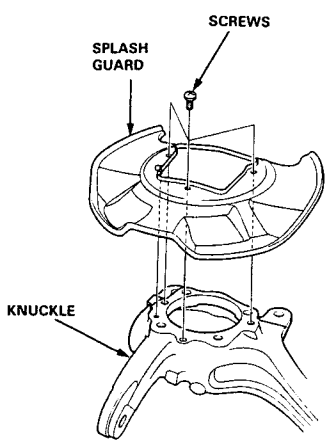

26. Remove the four bolts, then separate the hub unit from the brake disc.

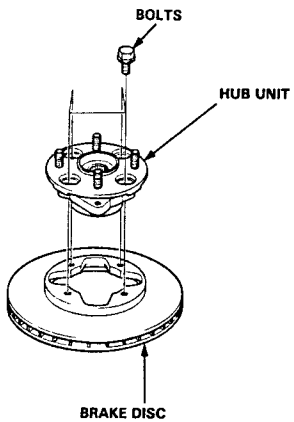

27. Separate the wheel bearing from the front hub using the special tools and a press.

CAUTION: Hold onto the hub to keep it from falling when pressed clear.

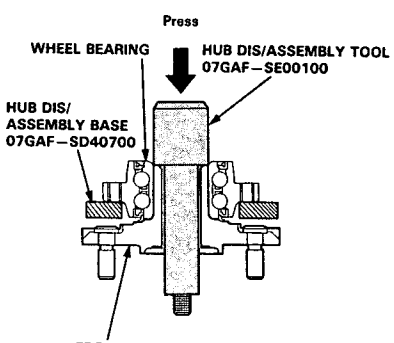

28. Press the wheel bearing inner race from the hub using the special tools and a commercially available bearing separator.

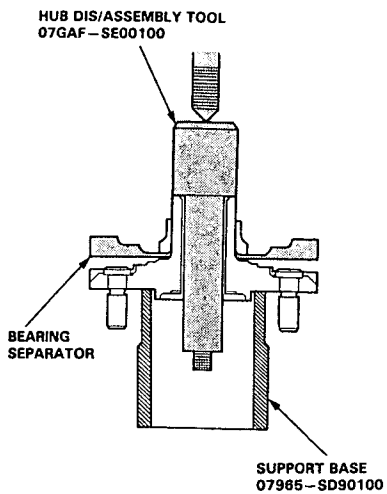

29. Replace the bearing with a new one after removal.

(cont'd)

Knuckle/Hub (cont'd)

NOTE: Wash the knuckle and hub thoroughly in high flash point solvent before reassembly.

30. Press a new wheel bearing into the hub using the special tools and a press.

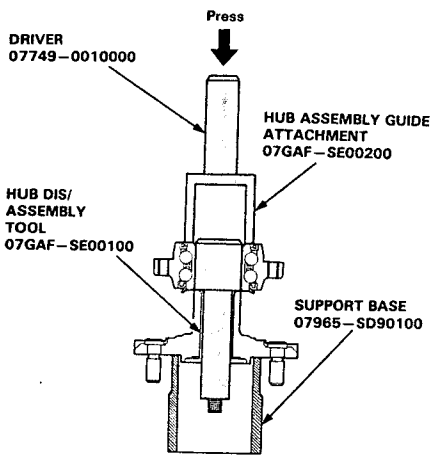

31. Install the hub unit on the brake disc and tighten the bolts.

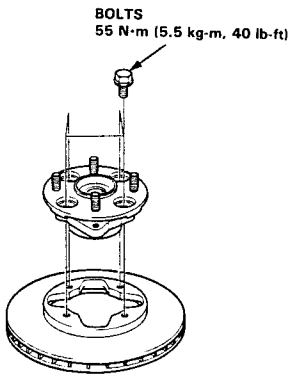

32. Install the splash guard and tighten the screws.

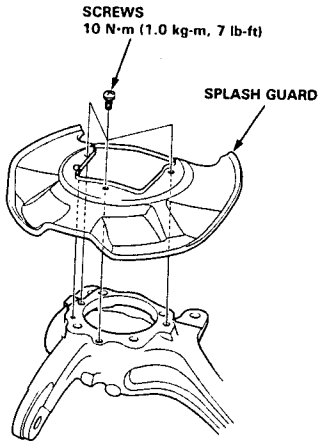

33. Install the knuckle on the hub unit and tighten the bolts.

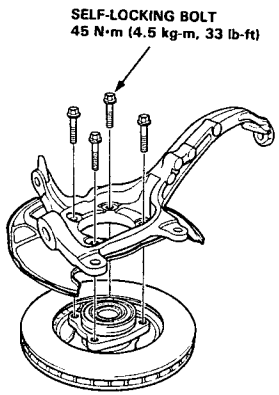

Installation

34. Install the knuckle on the driveshaft.

35. Install the knuckle on the tie-rod, upper arm and lower arm, then tighten the castle nuts.

36. Install the knuckle protector with the 6 mm bolt.

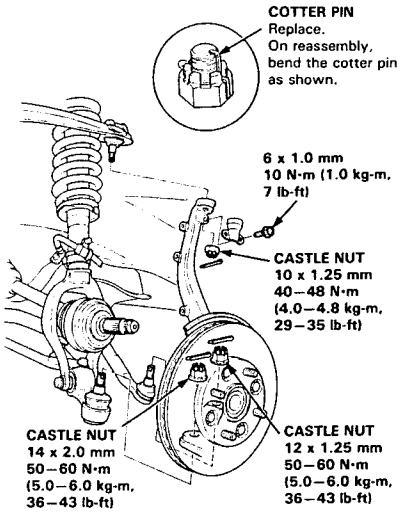

37. Install the wheel sensor with the sensor mounting bolts.

38. Install the sensor wire with the two bolts.

NOTE: Be careful when installing the sensors to avoid twisting wires.

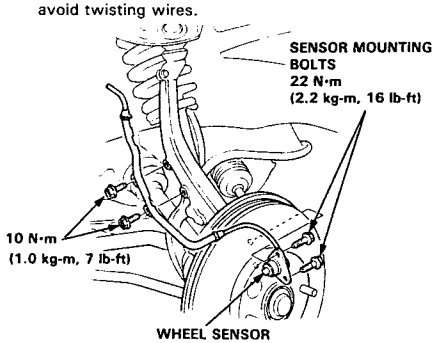

39. Install the caliper assembly with the caliper bracket mounting bolt.

40. Install the brake hose with the brake hose mounting bolt.

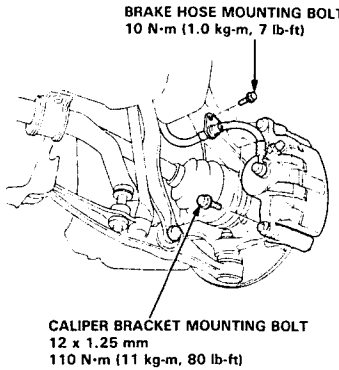

41. Tighten the new spindle nut.

NOTE: Before installing the wheel, clean the mating surface of the brake disc and inside of the wheel.

42. Install the front wheel with the wheel nuts.

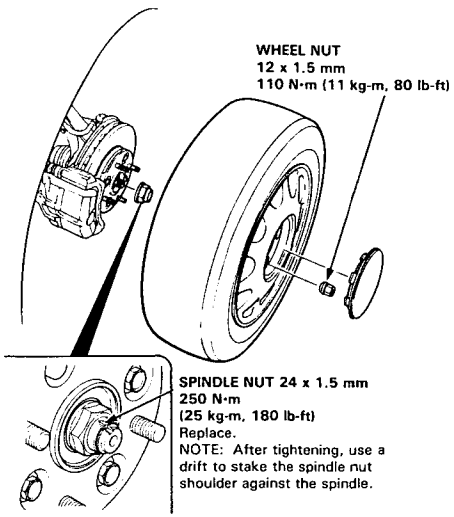

Front Suspension

Lower Ball Joint Replacement

1. Remove the lower arm from the knuckle.
2. Remove the boot by prying the circlip off.
3. Remove the 40 mm circlip.
4. Install the special tool on the ball joint and tighten the ball joint nut.
5. Position the special tool over the ball joint as shown, then set the assembly in a vise. Press the ball joint out of the knuckle.

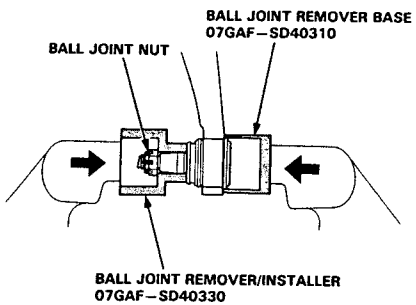

6. Place the ball joint in position by hand.
7. Install the special tools over the ball joint as shown, then press the ball joint in.

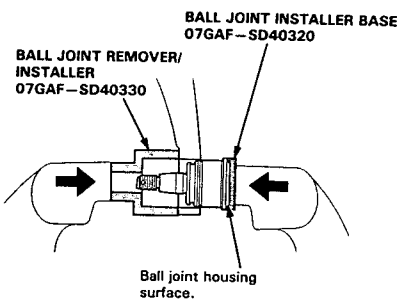

8. Install the 40 mm circlip.

Ball Joint Boot Replacement

1. Remove the set ring and the boot.

   CAUTION: Do not contaminate the boot installation section with grease.

2. Pack the interior of the boot and lip with grease.

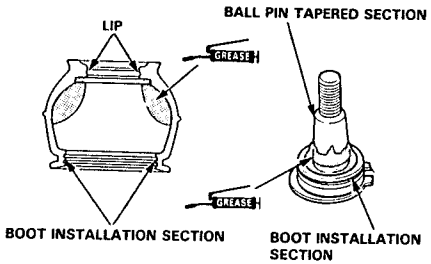

3. Wipe the grease off the sliding surface of the ball pin and pack with fresh grease.

   CAUTION:
   - **Keep grease off the boot installation section and the tapered section of the ball pin.**
   - **Do not allow dust, dirt, or other foreign materials to enter the boot.**

4. Install the boot in the groove of the boot installation section securely, then bleed air.
5. Install the upper and lower ball joint boot clips using the special tools as follows:

   Lower ball joint: Adjust the special tool with the adjusting bolt until the end of the tool aligns with the groove on the boot. Slide the set ring over the tool and into position.

   Upper ball joint: Hold the tool over the ball joint, then slide the set ring over the tool and into position.

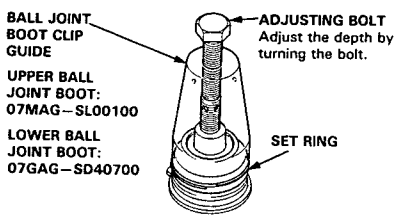

CAUTION: After installing the boot, check the ball pin tapered section for grease contamination and wipe it if necessary.

Suspension Arms

Removal/Inspection

CAUTION:
- **Replace the self-locking nuts after removal.**
- **Replace the self-locking bolts if you can easily thread a non-self-locking nut past their nylon locking inserts. (It should require 1 N·m (0.1 kg-m, 0.7 lb-ft) of torque to turn the nut on the bolt).**
- **Be careful not to damage the ball joint boots.**

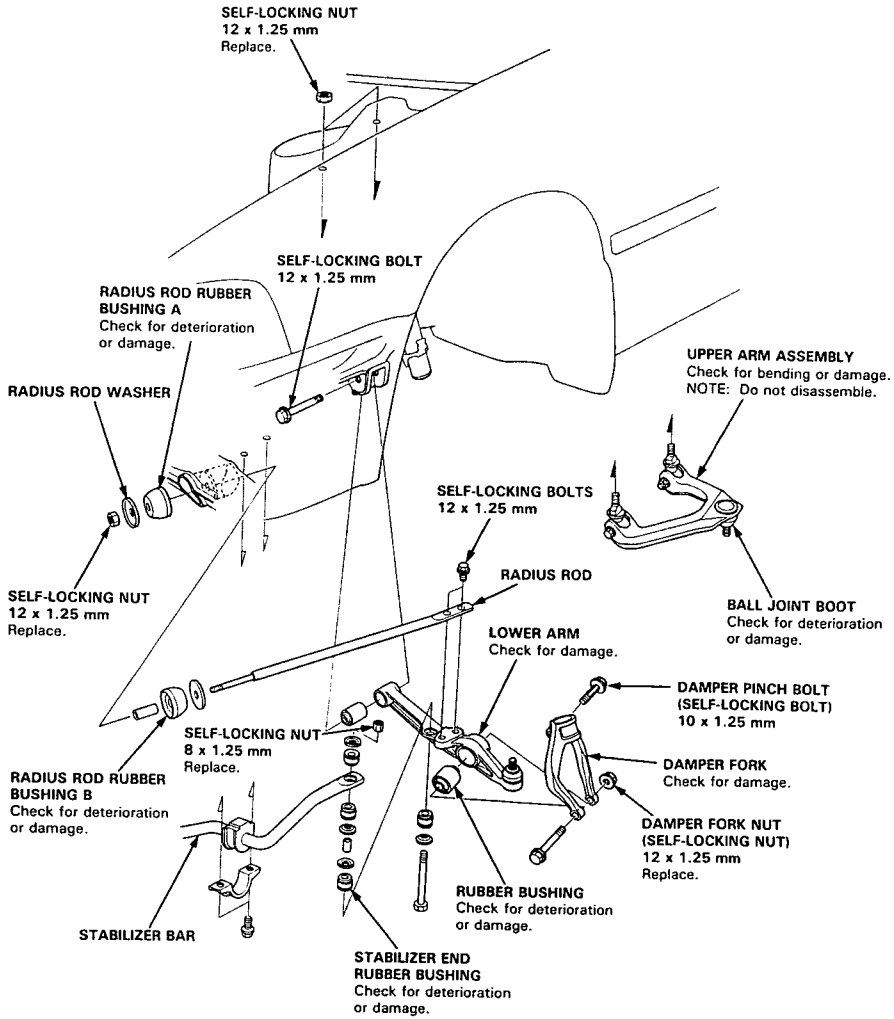

(cont'd)

Front Suspension

Suspension Arms (cont'd)

Installation

NOTE:
- Wipe off the grease before tightening the nut at the ball joint.
- The right and left stabilizer springs are symmetrical. Install with the paint mark facing down.
- The right and left damper forks are not symmetrical. The left damper fork is marked with "L5L" while the right damper fork is marked with "L5R". Do not interchange them.
- The right and left upper arms are not symmetrical. The left upper arm is marked with "L5L" while the right upper arm is marked with "L5R". Do not interchange them.

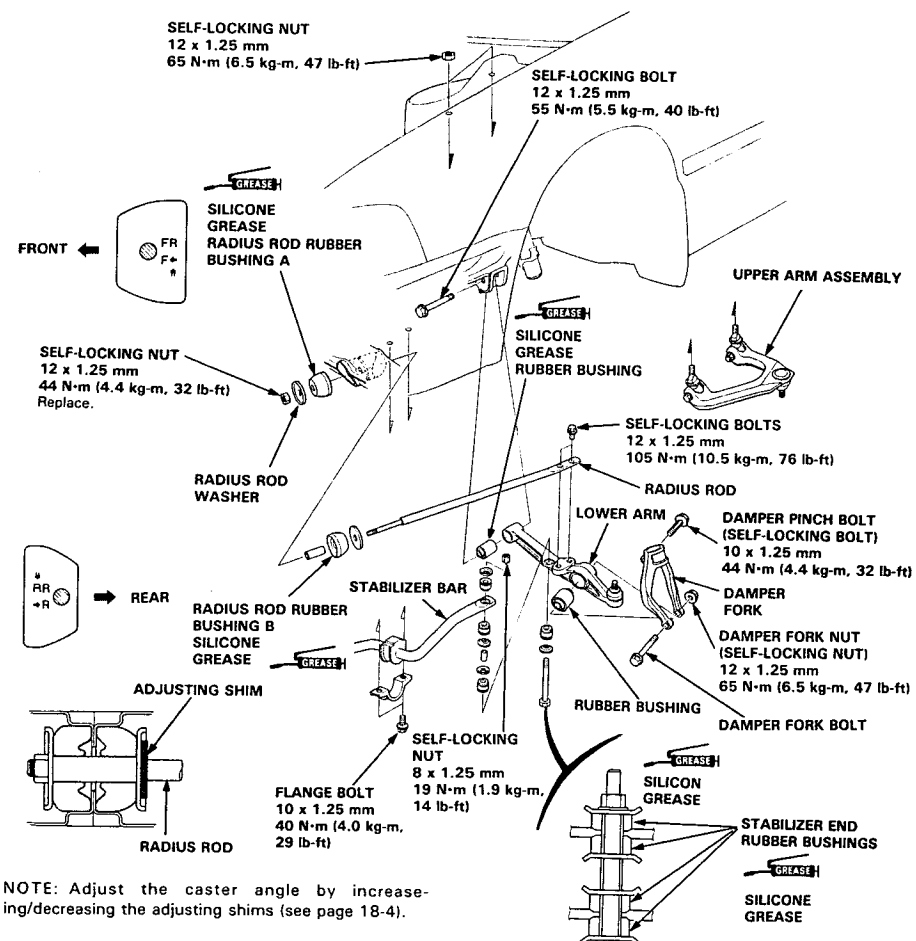

NOTE: Adjust the caster angle by increasing/decreasing the adjusting shims (see page 18-4).

CAUTION: Do not interchange the radius rod rubber bushings. The thick bushing should be installed in front position.

Front Damper

Removal

1. Remove the brake hose clamps from the damper.
2. Remove the damper pinch bolt.
3. Remove the damper fork nut, bolt and remove the damper fork.

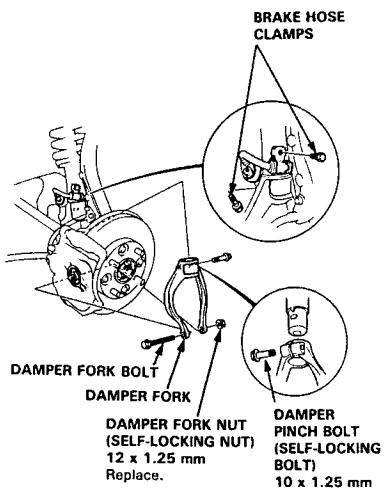

4. Remove the damper by removing the three flange nuts.

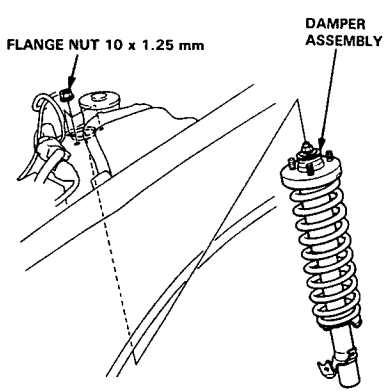

Disassembly/Inspection

Disassembly

1. Compress the damper spring with the spring compressor acording to the manufacturer's instructions, then remove athe self-locking nut.

   CAUTION: Do not compress the spring more than necessary to remove the nut.

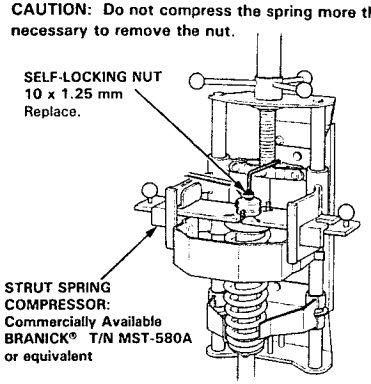

2. Remove the spring compressor then disassemble the damper as shown on the next page.

Inspection

1. Reassemble all parts, except the spring.
2. Push on the damper assembly as shown.
3. Check for smooth operation through a full stroke, both compression and extension.

   NOTE: The damper should move smoothly. If it does not (no compression or no extension), the gas is leaking, and the damper should be replaced.

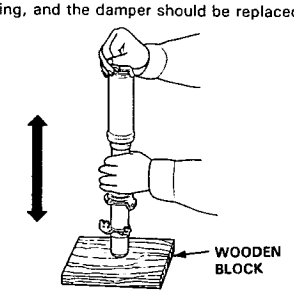

4. Check for oil leaks, abnormal noises or binding during these tests.

   NOTE: See page 18-31 for damper disposal.

Front Damper

Inspection

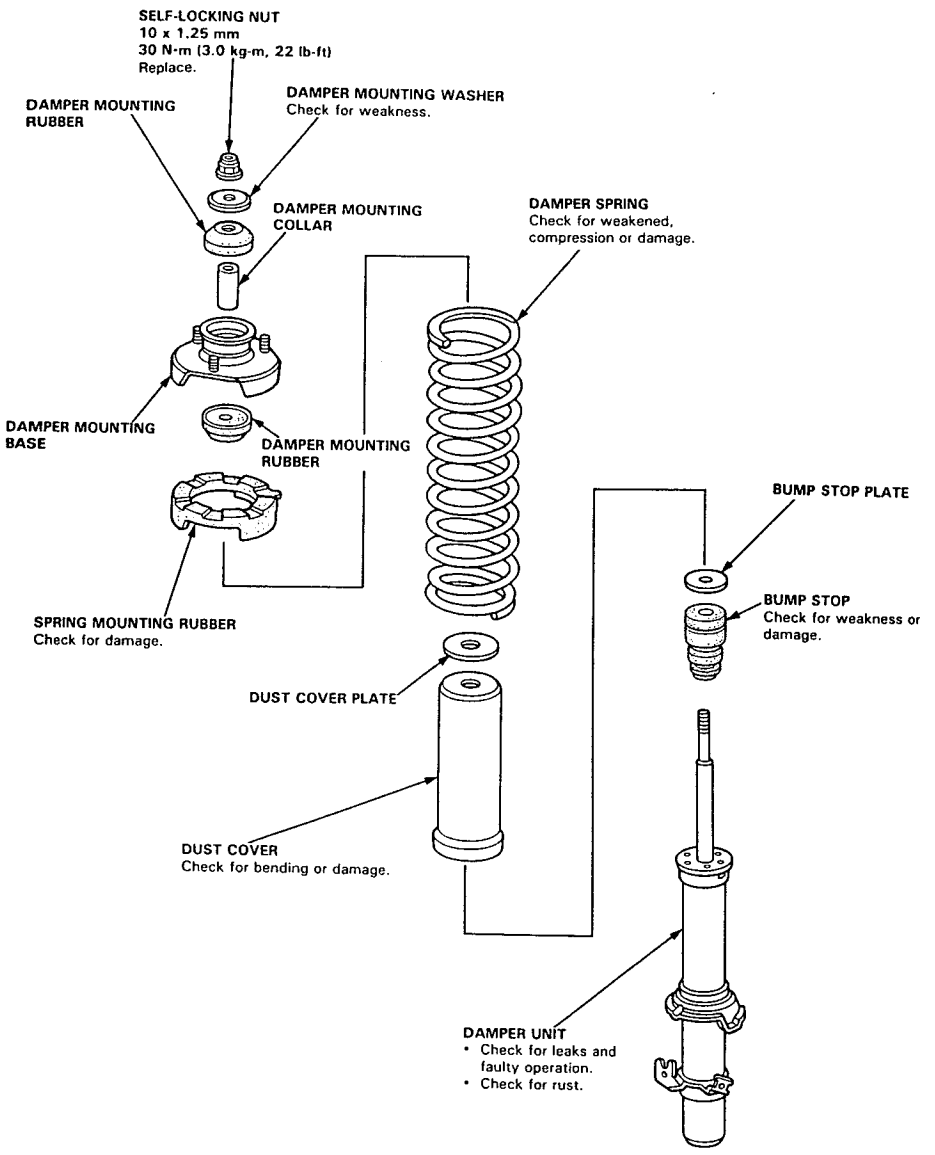

Front Damper

Reassembly

1. Install the damper unit on a spring compressor.

   NOTE: Follow the manufacturer's instructions.

2. Assemble the damper in reverse order of disassembly except the damper mounting washer and self-locking nut.

   NOTE: Align the bottom of damper spring and spring lower seat as shown.

3. Position the damper mounting base on the damper unit as shown.

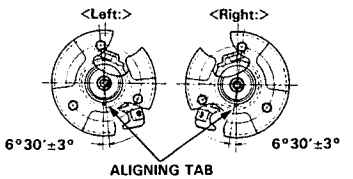

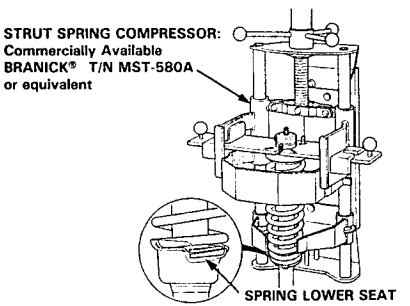

4. Compress the damper spring.

5. Install the damper mount washer and a new self-locking nut.

6. Hold the damper shaft and tighten the self-locking nut.

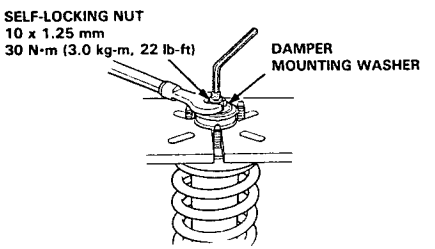

Installation

1. Loosely install the damper on the frame with the aligning tab facing inside.

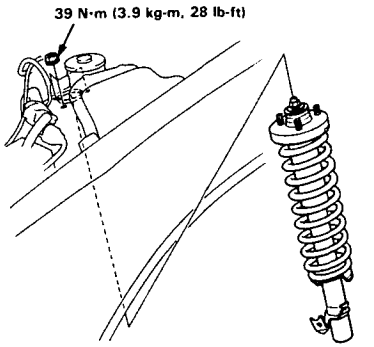

2. Install the damper fork on the driveshaft and lower arm. Install the damper in the damper fork so the aligning tab is aligned with the slot in the damper fork.

3. Hand-tighten the bolts and nuts.

4. Raise the knuckle with a floor jack until the car just lifts off the safety stand.

   NOTE: The bolts and nuts should be tightened with the vehicle's weight on the damper.

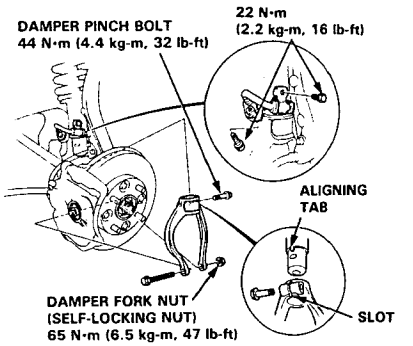

5. Tighten the damper pinch bolt.

6. Secure the damper fork bolt with a new self-locking nut.

7. Secure the damper assembly to the frame with the flange nuts.

8. Install the brake hose clamps with the two bolts.

Rear Suspension

Torque Specifications

CAUTION:
- Replace the self-locking nuts after removal.
- Replace the self-locking bolts if you can easily thread a non-self-locking nut past their nylon locking inserts. (It should require 1 N·m (0.1 kg-m, 0.7 lb-ft) of torque to turn the nut on the bolt).
- The vehicle should be on the ground before any bolts or nuts connected to rubber mounts or bushings are tightened.
- Torque the castle nut to the lower torque specification, then tighten it only far enough to align the slot with the pin hole. Do not align the nut by loosening.

NOTE: Wipe off the grease before tightening the nut at the ball joint.

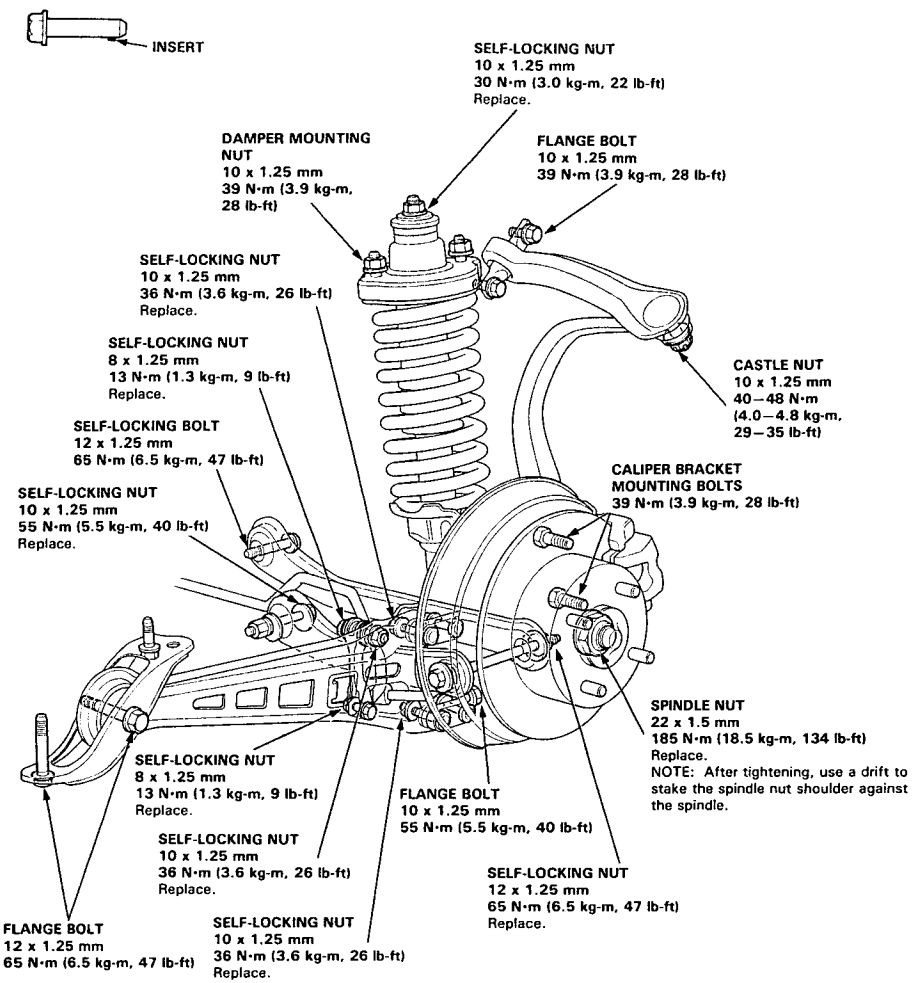

Hub Bearing Unit

Illustrated Index

NOTE:
- Use only genuine Honda wheel weights for aluminum wheels. Non-genuine wheel weights may corrode and damage the aluminum wheels.
- For aluminum wheels, remove the center cap by prying it out with a flat screwdriver. Use a rag at the point you are going to pry because aluminum alloy wheels can be easily damaged. Avoid damage to the cap by not allowing it to fall during removal.
- Before installing the brake disc, clean the mating surfaces of the rear hub and inside of the brake disc.
- Before installing the wheel, clean the mating surfaces of the brake disc and inside of the wheel.

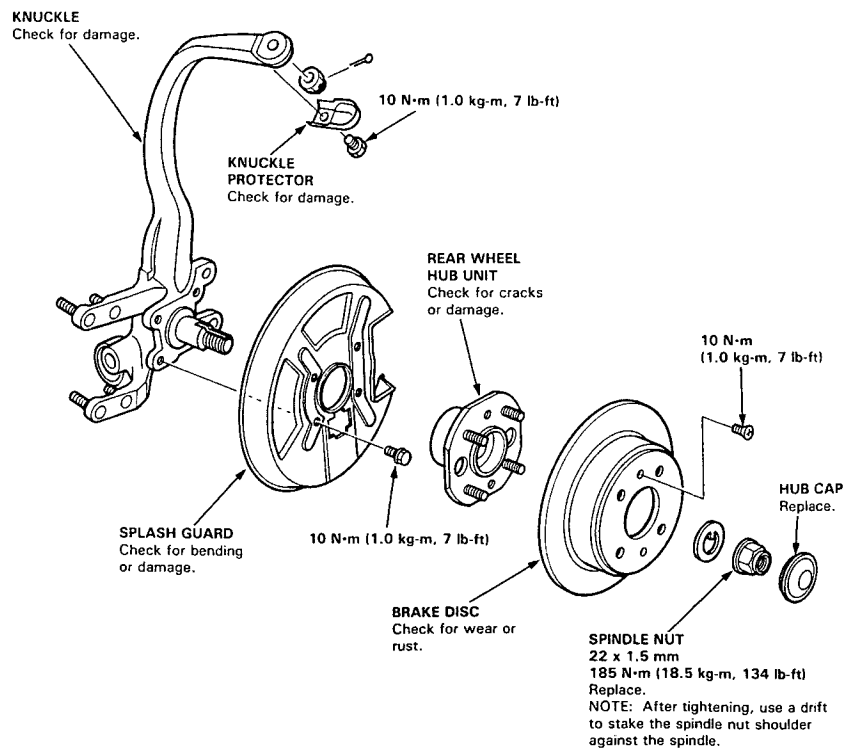

Hub Bearing Unit

Removal

1. Raise the rear of the car, and support it with safety stands in the proper locations (see section 1).
2. Remove the wheel nuts and rear wheel.
3. Pull the parking brake lever up.
4. Remove the hub cap, raise the locking tab on the spindle nut, then remove the nut.

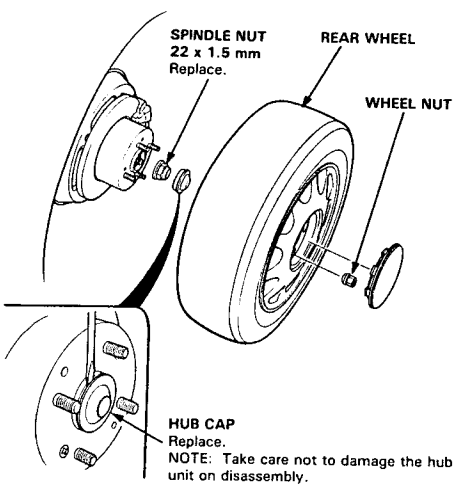

5. Remove the 6 mm brake disc retaining screws.

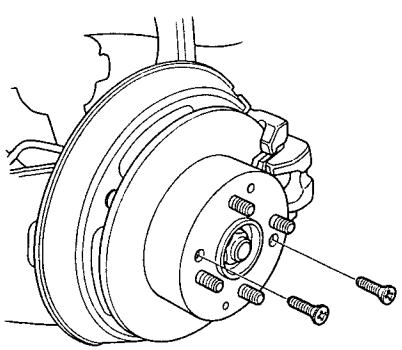

6. Release the parking brake lever.
7. Remove the brake hose mounting bolt.
8. Remove the caliper bracket mounting bolts and hang the caliper assembly to one side.

   CAUTION: To prevent accidental damage to the caliper assembly or brake hose, use a short piece of wire to hang the caliper assembly from the undercarriage.

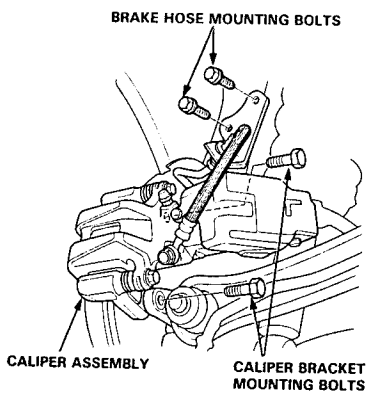

9. Screw two 8 x 12 mm bolts into the disc to push it away from the hub.

   NOTE: Turn each bolt two turns at a time to prevent cocking the disc excessively.

10. Remove the brake disc.
11. Remove the hub unit from the knuckle.

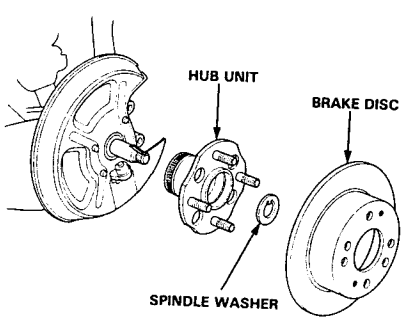

Installation

NOTE: Wash the bearing and spindle thoroughly in high flash point solvent before reassembly.

12. Install the hub unit, spindle washer and brake disc.

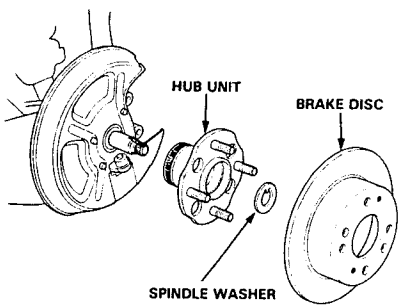

13. Install the caliper assembly with the caliper bracket mounting bolts.
14. Install the brake hose with the brake hose mounting bolts.

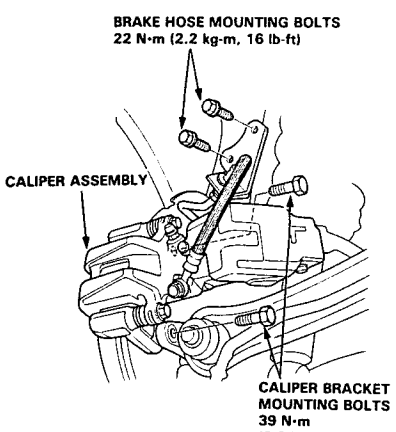

15. Tighten the 6 mm brake disc retaining screws.

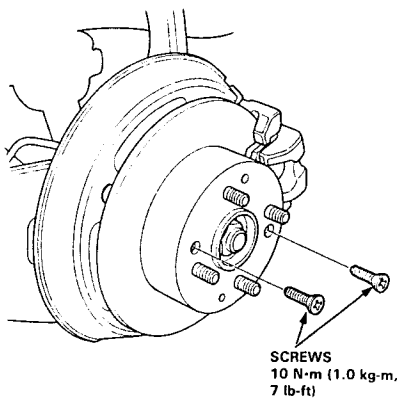

16. Tighten the new spindle nut.
17. Install the new hub cap.

    NOTE: Before installing the wheel, clean the mating surface of the brake disc and inside of the wheel.

18. Install the rear wheel with the wheel nut.

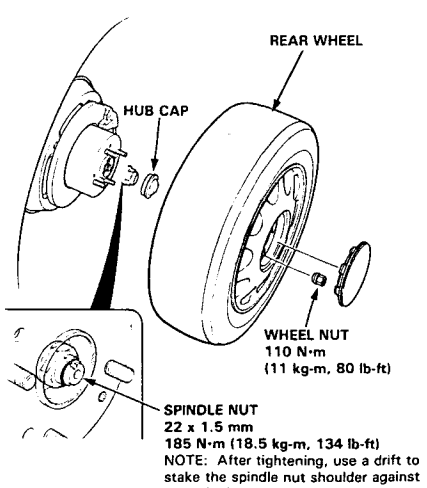

Rear Suspension

Suspension Arms

Removal/Inspection

CAUTION:
- Replace the self-locking nuts after removal.
- Replace the self-locking bolts if you can easily thread a non-self-locking nut past their nylon locking inserts. (It should require 1 N·m (0.1 kg-m, 0.7 lb-ft) of torque to turn the nut on the bolt).
- Be careful not to damage the ball joint boots.

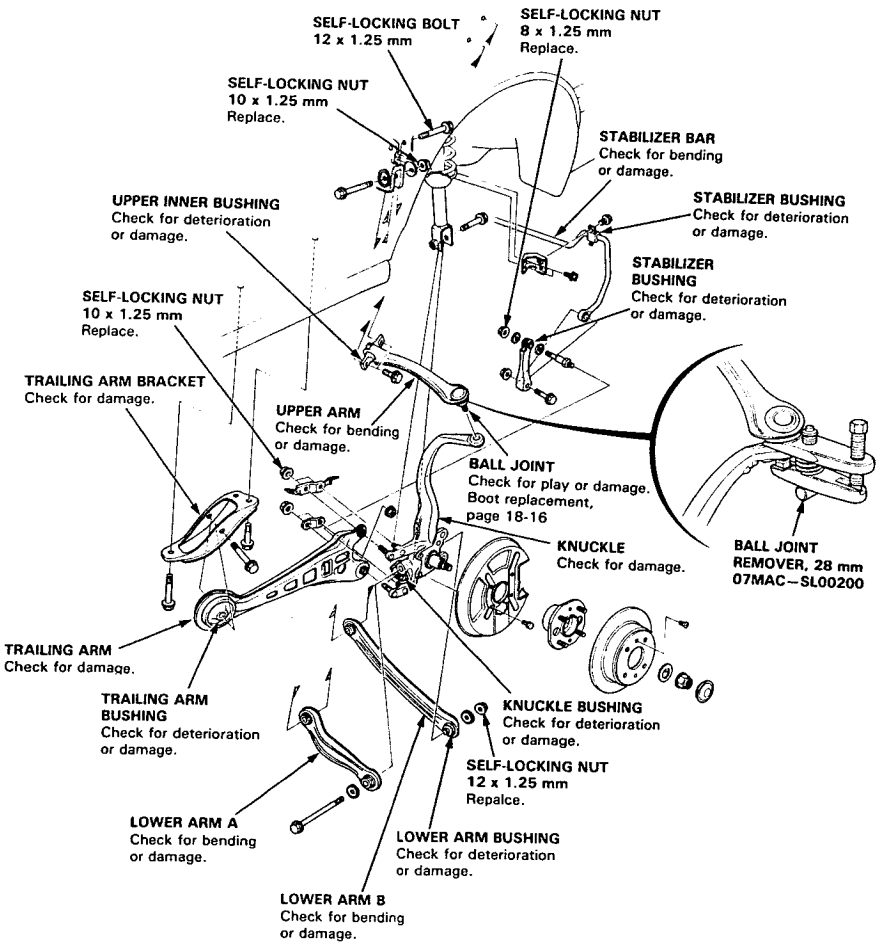

Installation

NOTE:
- Wipe off the grease before tightening the nut at the ball joint.
- Make sure the toe adjuster cams on lower arm B are installed in the same direction.
- The right and left lower arm B are symmetrical. Install so the paint make of "SM4↑R UP↑" and "SM4↑L UP↑" point to the front.
- "SM4↑L UP↑" is stamped on the left lower arm A and "SM4↑R UP↑" on the right lower arm A.
- The left upper arm is stamped with "AL" while the right upper arm is stamped with "AR".

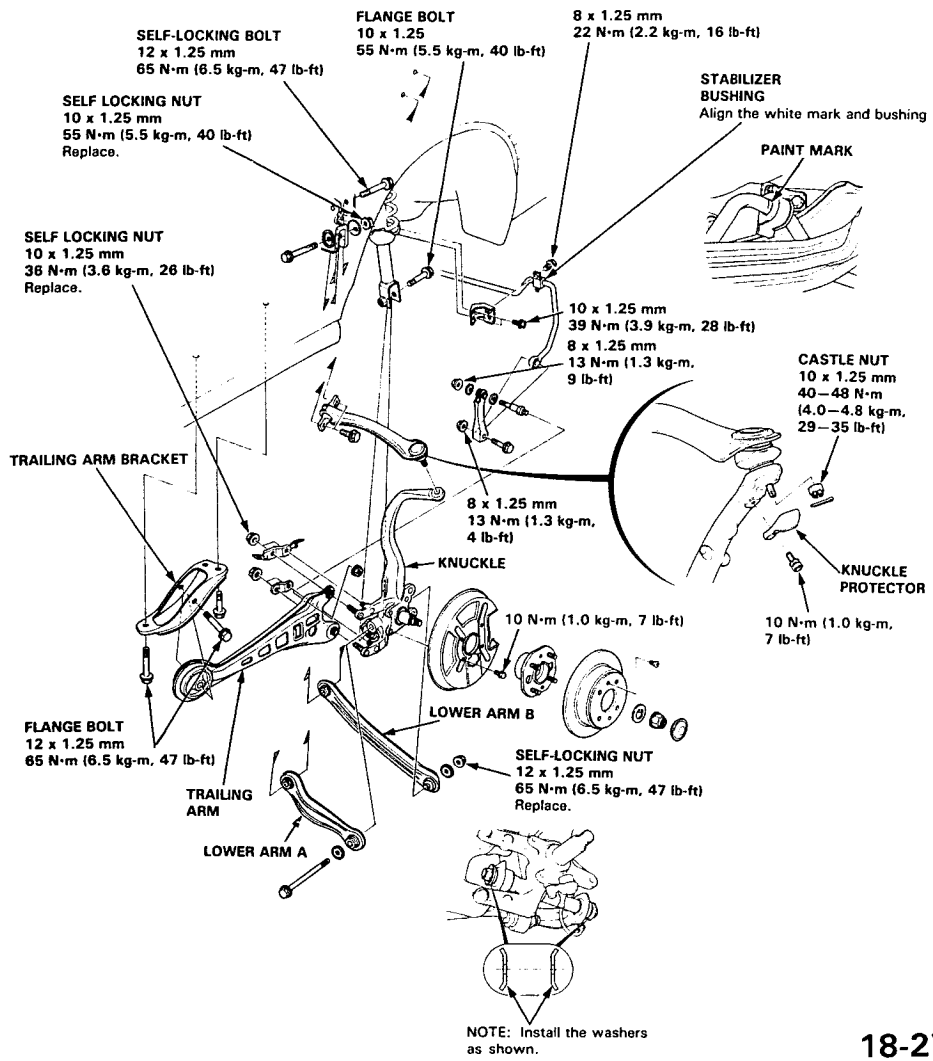

Rear Damper

Removal

1. Raise the rear of the car, and support it with safety stands in the proper locations (see section 1).
2. Remove the rear wheel.
3. Remove the rear seat.
4. Remove the damper mounting nuts.

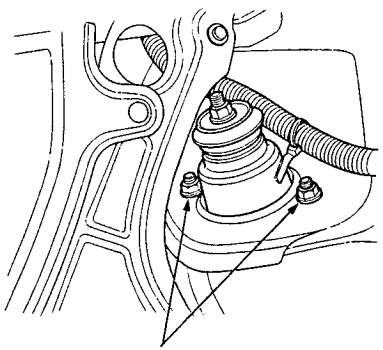

5. Remove the damper mounting bolt.
6. Lower the rear suspension and remove the damper assembly.

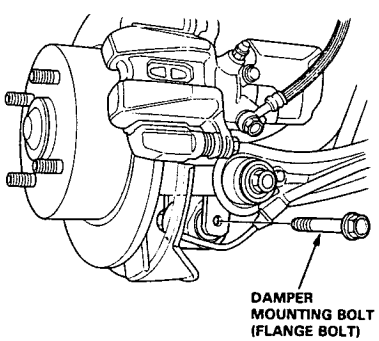

Disassembly/Inspection

Disassembly

1. Compress the damper spring with the spring compressor according to the manufacturer's instructions, then remove the self-locking nut.

   CAUTION: Do not compress the spring more than necessary to remove the nut.

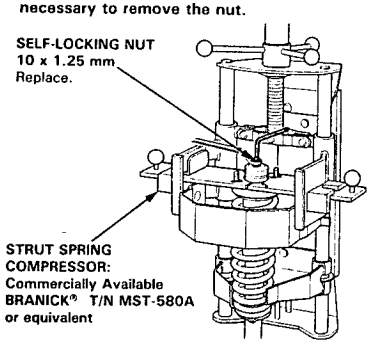

2. Remove the spring compressor and disassembly the damper as shown on the next page.

Inspection

1. Reassemble all parts, except the spring.
2. Push on the damper assembly as shown.
3. Check for smooth operation through a full stroke, both compression and extension.

   NOTE: The damper should move smoothly. If it does not (no compression or no extension), the gas is leaking, and the damper should be replaced.

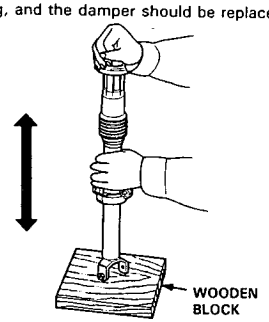

4. Check for oil leaks, abnormal noises or binding during these tests.

   NOTE: See page 19-31 for damper disposal.

Inspection

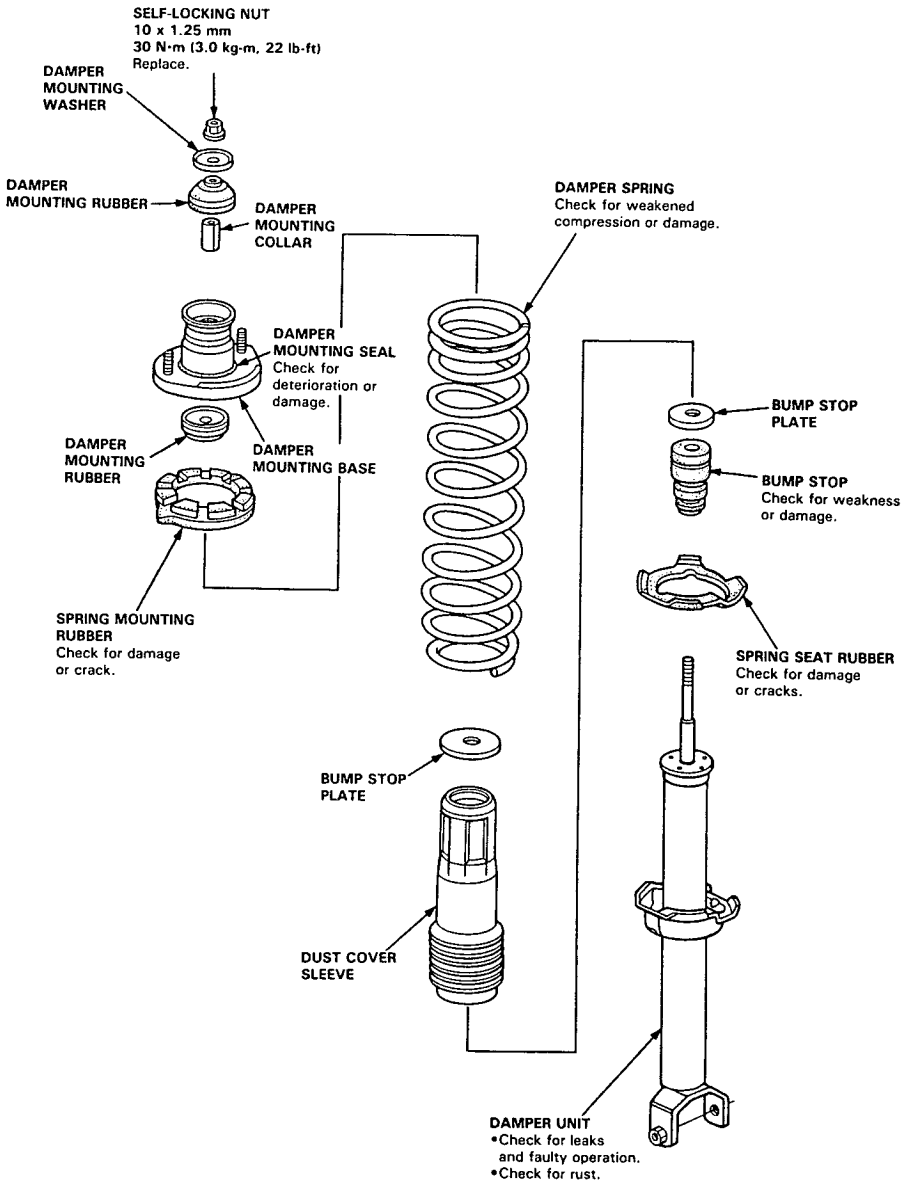

Rear Damper

Reassembly

1. Install the damper unit on a spring compressor.

   NOTE: Follow the manufacturer's instructions.

2. Assemble the damper in reverse order of disassembly except the damper mounting washer and self-locking nut.

   NOTE: Align the bottom of damper spring and spring lower seat as shown.

3. Position the damper mounting base on the damper unit as shown.

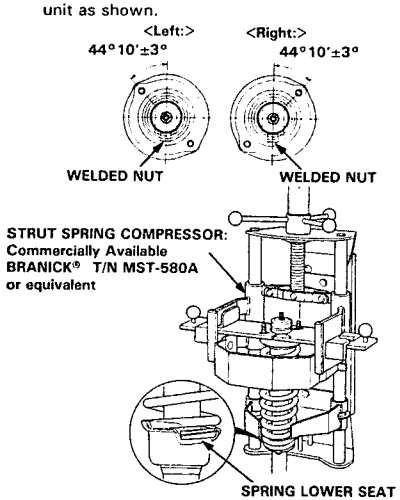

4. Compress the damper spring.

5. Install the damper mounting washer and a new self-locking nut.

6. Hold the damper shaft and tighten the self-locking nut.

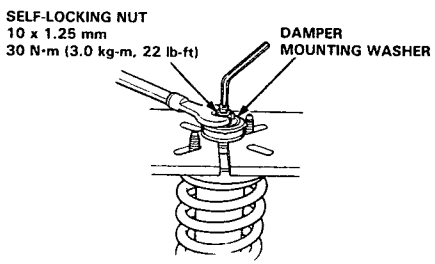

Installation

1. Lower the rear suspension and set the damper assembly in its original position.

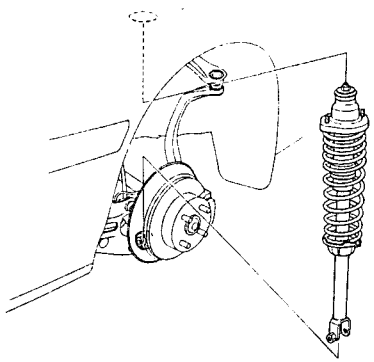

2. Loosely install the damper mounting bolts.

3. Raise the rear suspension with a floor jack until the weight of the car is on the damper.

   NOTE: The damper mounting bolts should be tightened with the damper under vehicle load.

4. Loosely install the damper mounting nuts.

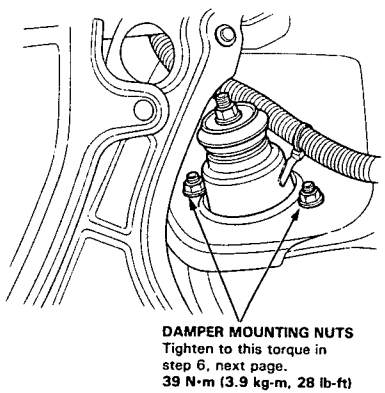

5. Tighten the damper mounting bolt.

6. Tighten the damper mounting nuts.

7. Install the rear seat.

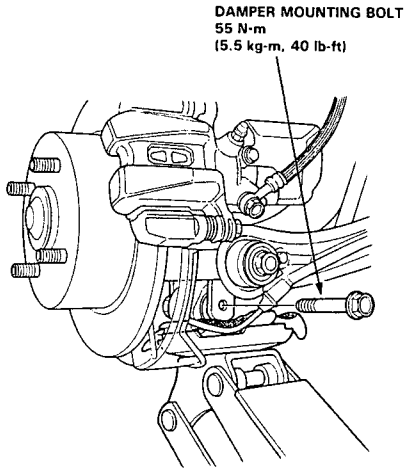

Damper Disposal

⚠WARNING

- **The dampers contain nitrogen gas and oil under pressure. The pressure must be relieved before disposal to prevent explosion and possible injury when scrapping.**
- **Always wear eye protection to avoid getting metal shavings in your eyes when the gas damper pressure is relieved.**

Place the damper on a level surface with its rod extended and drill a hole of 2.0–3.0 mm (0.08–0.12 in) diameter in the body to release the gas.

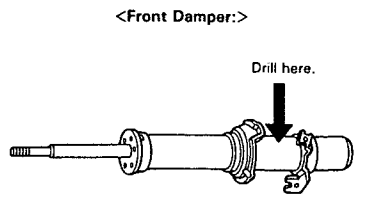

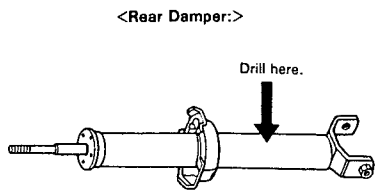

Brakes (Anti-lock Brake System)

Special Tools 19-2
Illustrated Index 19-3
Pedal Height
  Adjustment 19-4
Parking Brake
  Adjustment 19-4
Front Brakes
  Torque/Inspection 19-5
Front Brake Pads
  Inspection/Replacement 19-6
Front Caliper
  Disassembly/Reassembly 19-7
Front Brake Disc
  Runout Inspection 19-9
  Thickness and Parallelism
  Inspection 19-9
Bleeding 19-10
Master Cylinder and Brake Booster
  Index/Torque 19-11
Master Cylinder
  Index/Inspection 19-12
  Replacement 19-13
Brake Booster
  Tests 19-14
  Replacement 19-15
  Pushrod Clearance Adjustment 19-16
Rear Brakes
  Torque/Inspection 19-17
Rear Brake Pads
  Inspection/Replacement 19-18
Rear Brake Disc
  Runout Inspection 19-20
  Thickness and Parallelism
  Inspection 19-21
Rear Caliper
  Disassembly 19-21
  Reassembly 19-24
Brake Hoses/Pipes
  Inspection 19-27
Parking Brake
  Disassembly and Reassembly 19-28
Anti-lock Brake System (ABS)
  Features/Construction/
  Operation 19-29
Circuit Diagram 19-42
Wiring/Connector Location 19-44
ALB Checker
  Function Test 19-45
  Wheel Sensor Signal
  Confirmation 19-47
Troubleshooting
  Anti-lock Brake System (ABS)
  Indicator Light 19-48
  Symptom-to-System Chart 19-50
  Flowcharts 19-51
Hydraulic System
  Index/Hydraulic Connections 19-72
  Relieving Accumulator/
  Line Pressure 19-73
Modulator Unit
  Index/Torque 19-74
  Replacement 19-75
  Solenoid Leak Test 19-76
Pump Assembly
  Index/Torque 19-77
Accumlator
  Disposal 19-78
Bleeding 19-79
Electronic Components
  ABS Control Unit Replacement 19-80
  Relays Inspection 19-80
Pulsers/Wheel Sensors
  Inspection 19-81
  Wheel Sensor Replacement 19-82

Special Tools

Ref. No.	Tool Number	Description	Qty	Page Reference
①	07HAA–SG00100 or	Bleeder T-wrench	1	19-51, 58, 71, 77
	07HAA–SG00101		1	
②	07HAE–SG00100	Brake Spring Compressor	1	19-22, 23, 25, 26
③	07HAJ–SG0010A or	ALB Checker	1	19-45, 47, 77
	07HAJ–SG0010B		1	
	07HAJ–SG00200	ALB Checker (CANADA)	1	
④	07JAG–SD40100	Pushrod Adjustment Gauge	1	19-16
⑤	07914–SA50000	Snap Ring Pliers	1	19-23, 26
⑥	07916–6390001	Locknut Wrench	1	19-21, 26

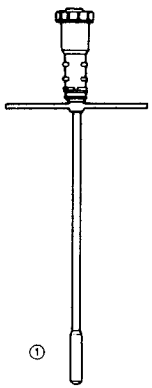
①

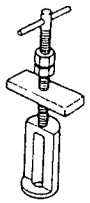
②

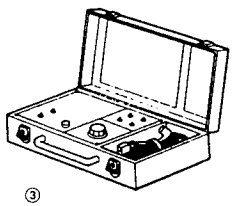
③

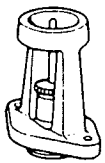
④

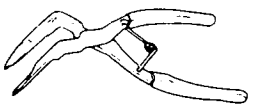
⑤

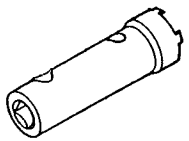
⑥

Illustrated Index

⚠WARNING The accumlator contains high-pressure nitrogen gas, do not puncture, expose to flame or attempt to disassemble the accumlator or it may explode; severe personal injury may result.

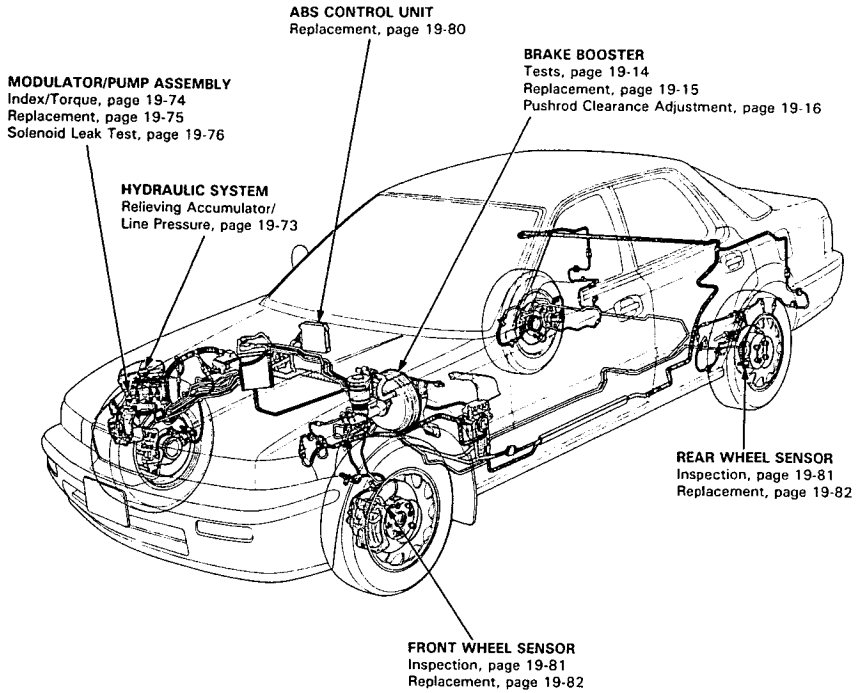

Pedal Height

Adjustment

1. Loosen the brake switch locknut and back off the brake switch until it is no longer touching the brake pedal.

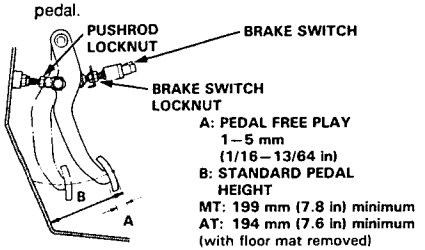

2. Loosen the pushrod locknut and screw the pushrod in or out with pliers until the standard pedal height from the floor is reached. After adjustment, tighten the locknut firmly.

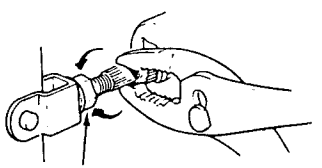

3. Screw in the brake switch until its plunger is fully depressed (threaded end touching the pad on the padal arm). Then back off the switch 1/2 turn and tighten the locknut firmly.

CAUTION: Check that the brake lights go off when the pedal is released.

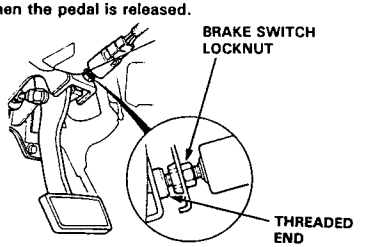

Brake Pedal Play Inspection:
Stop the engine and inspect the play by pushing the pedal by hand.

Brake Pedal Free Play: 1–5 mm (1/16–13/64 in)

NOTE: Do not adjust the pedal height with the pushrod depressed.

CAUTION: If the pedal free play is insufficient, it may result in brake drag.

Parking Brake

Adjustment

NOTE: After rear brake caliper servicing, loosen the parking brake adjusting nut, start the engine and depress the brake pedal several times to set the self-adjusting brakes before adjusting the parking brake.

WARNING Block the front wheels before jacking up the rear of the car.

1. Raise the rear wheels off the ground.
2. Make sure the lever of the rear brake caliper contacts the brake caliper pin.

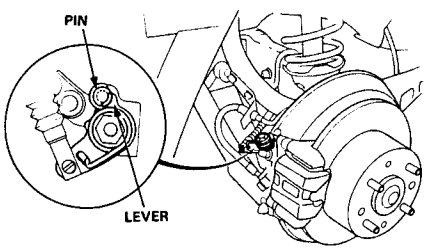

3. Pull the parking brake lever up one notch.
4. Tighten the adjusting nut until the rear wheels drag slightly when turned.
5. Release the parking lever and check that the rear wheels do not drag when turned. Readjust if necessary.
6. With the equalizer properly adjusted, the rear brakes should be fully applied when the parking brake lever is pulled up 7 to 11 clicks.

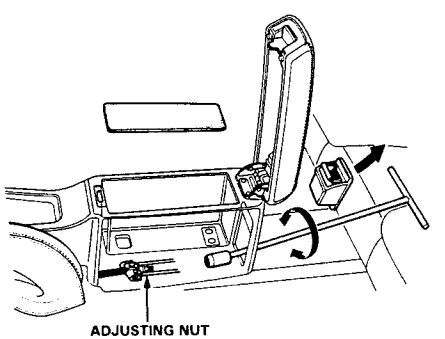

Front Brakes

Torque/Inspection

WARNING
- **Never use an air hose or dry brush to clean brake assemblies.**
- **Use an OSHA-approved vacuum cleaner, to avoid breathing brake dust.**
- **Contaminated brake discs or pads reduce stopping ability.**

NOTE:
- Coat piston, piston seal, and caliper bore with clean brake fluid.
- Replace all rubber parts with new ones whenever disassembled.

GREASE : BRAKE CYLINDER GREASE (P/N 08733–B020E) OR EQUIVALENT RUBBER GREASE
GREASE : SILICONE GREASE

CAUTION:
- **Do not spill brake fluid on the car; it may damage the paint; if brake fluid does contact the paint, wash it off immediately with water.**
- **To prevent spills, cover the hose joints with rags or shop towels.**
- **Clean all parts in brake fluid and air dry; blow out all passages with compressed air.**
- **Before reassembling, check that all parts are free of dust and other foreign particles.**
- **Replace parts with new ones whenever specified to do so.**
- **Make sure no dirt or other foreign matter is allowed to contaminate the brake fluid.**
- **Do not mix different brands of brake fluid as they may not be compatible.**
- **Do not reuse the drained fluid. Use only clean DOT 3 or 4 brake fluid.**

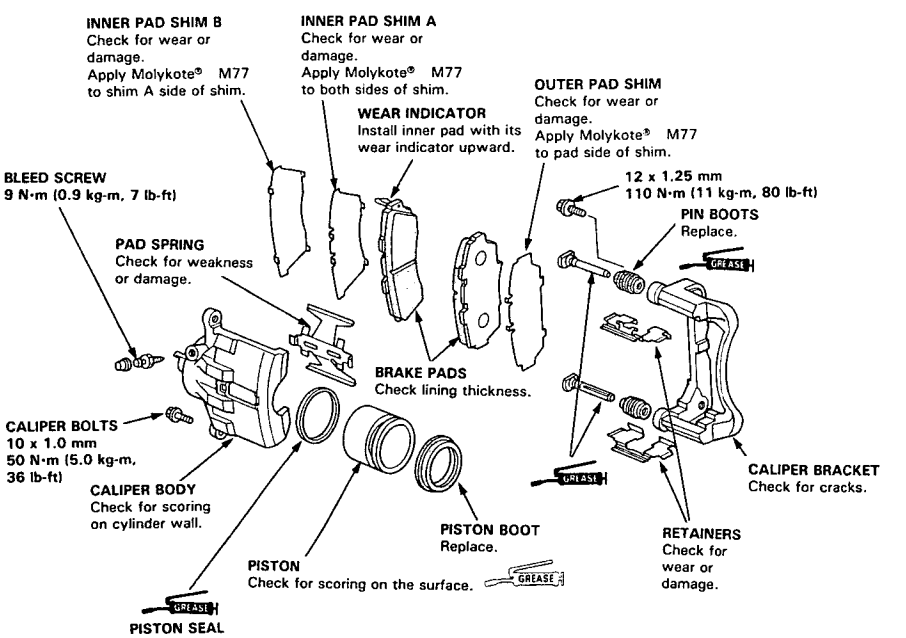

Front Brake Pads

Inspection/Replacement

⚠WARNING

- **Never use an air hose or dry brush to clean brake assemblies.**
- **Use an OSHA-approved vacuum cleaner, to avoid breathing brake dust.**

1. Loosen the front wheel lug nuts slightly, then raise the car and support on safety stands. Remove the front wheels.

2. Remove the caliper bolt and the brake hose bracket bolts, then pivot the caliper up out of the way.

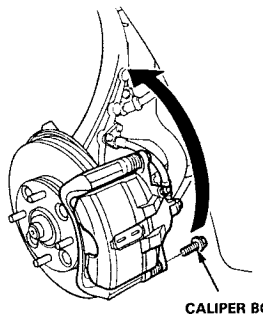

3. If the brake pad thickness is less than service limit at step 5, replace the front pads as a set.

   NOTE: Engagement of the brake may require a greater pedal stroke immediately after the brake pads have been replaced as a set. Several applications of the brake pedal will restore the normal pedal stroke.

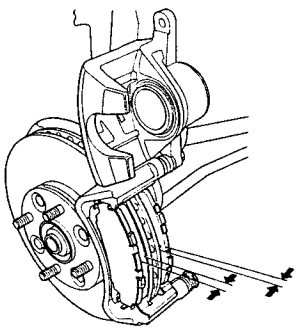

4. Remove the pad shims, pad retainers and pads.

5. Using a vernier caliper, measure the thickness of each brake pad lining.

   Brake Pad Thickness:
   Standard: 11.0 mm (0.43 in)
   Service Limit: 1.6 mm (0.06 in)

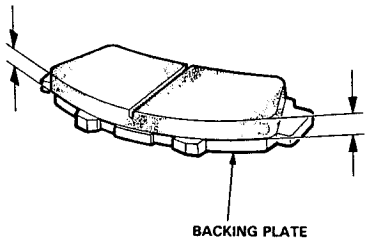

   NOTE: Measurement does not include pad backing thickness.

6. Clean the caliper thoroughly; remove any rust, and check for grooves or cracks.

7. Install the pad retainers.

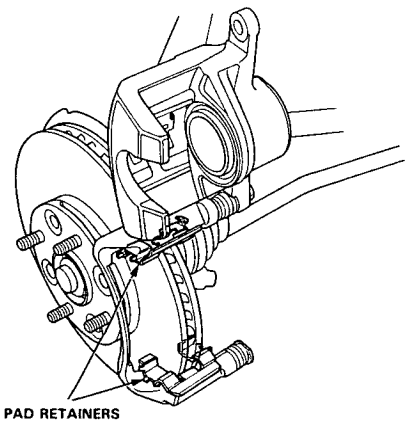

8. Apply Molykote® M77 compound to both sides of the pad shims and the back of the pads.

9. Install the brake pads and pad shims correctly.

   NOTE: Install the pad with the wear indicator on the inside.

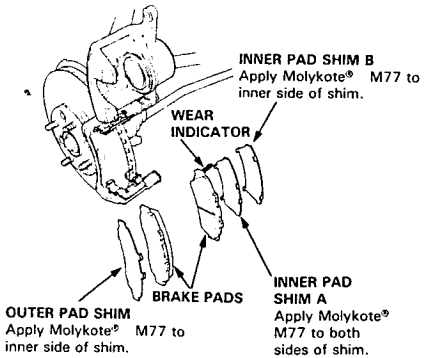

10. Push in the piston so that the caliper will fit over the pads. Keep the boot in position to prevent damaging the boot when pivoting the caliper down.

11. Pivot the caliper down into position, then install the caliper bolt and the brake hose bracket bolts. Tighten the bolts.

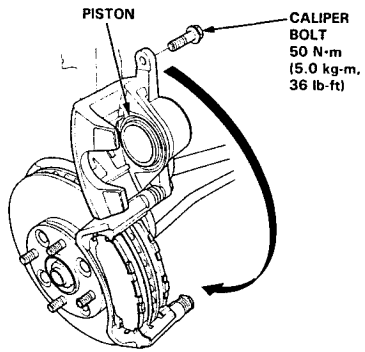

12. Depress the brake pedal several times to make sure the brakes work, then road-test.

Front Caliper

Disassembly/Reassembly

⚠WARNING

- **Never use an air hose or dry brush to clean brake assemblies.**
- **Use an OSHA-approved vacuum cleaner to avoid breathing brake dust.**

CAUTION:

- **Do not spill brake fluid on the car, it may damage the paint; if brake fluid does contact the paint, wash it off immediately with water.**
- **To prevent spills, cover the hose joints with rags or shop towels.**
- **Clean all parts in brake fluid and air dry; blow out all passages with compressed air.**

1. Remove the banjo bolt and disconnect the brake hose from the caliper.

2. Remove the caliper bolts, then remove the caliper.

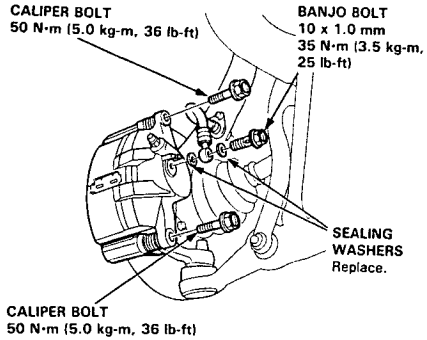

3. Remove the pad spring from the caliper body.

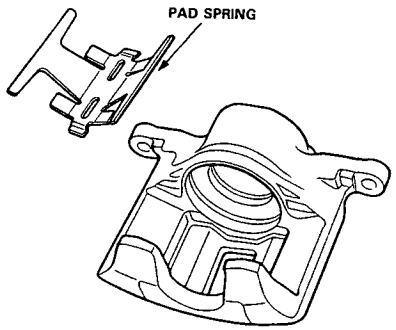

(cont'd)

Front Caliper

Disassembly/Reassembly (cont'd)

4. If necessary, apply compressed air to the caliper fluid inlet to get the piston out. Place a shop rag or wooden block as shown to cushion the piston when there are expelled.

   Use low pressure air in short spurts.
   Remove the piston from the caliper.

   WARNING
   - **Do not place your fingers in front of the piston.**
   - **Do not use high air pressure; use an OSHA-approved 30 PSI nozzle.**

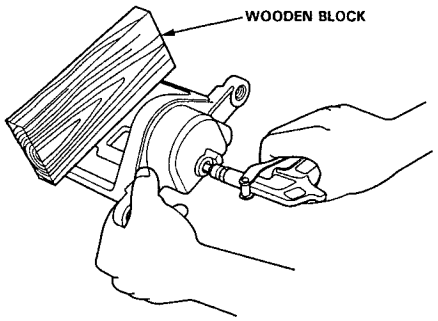

5. Remove the piston boot and piston seal.

   CAUTION: Take care not to damage the cylinder.

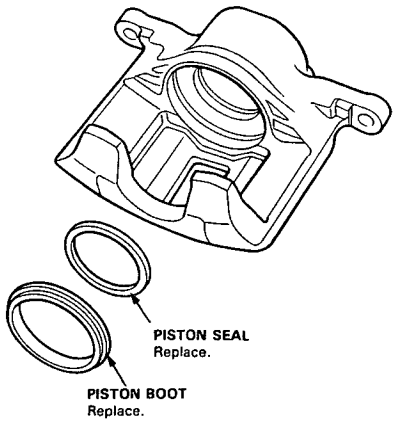

CAUTION:
- **Before reassembling, check that all parts are free of dust and other foreign particles.**
- **Replace parts with new ones whenever specified to do so.**
- **Use only clean DOT3 or 4 brake fluid.**
- **Make sure no dirt or other foreign matter is allowed to contaminate the brake fluid.**
- **Do not mix different brands of brake fluid as they may not be compatible.**
- **Do not spill brake fluid on the car; it may damage the paint, if brake fluid does contact the paint; wash it off immediately with water.**

6. Clean the piston and caliper bore with brake fluid and inspect for wear or damage.

7. Apply silicone grease to new piston seal, then install the piston seal in the cylinder groove.

8. Apply rubber grease (refer to page 19-5) to new piston boot, then install the piston boot in the clyinder groove.

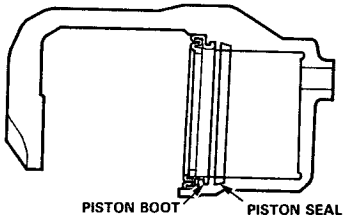

9. Lubricate the caliper cylinder and piston with brake fluid, then install the piston in the cylinder with the dished end facing in.

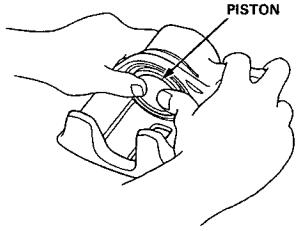

10. Reinstall the caliper in the reverse order of removal.

    WARNING Always reinstall the brake pads in their original positions to prevent loss of braking efficiency.

11. Fill the brake reservoir up and bleed the brake system (see page 19-10).

Front Brake Disc

Runout Inspection

1. Loosen the front wheel lug nuts slightly, then raise the car and support on safety stands.
   Remove the front wheels.

2. Remove the brake disc pads (see page 19-6).

3. Inspect the disc surface for cracks, and rust. Clean the disc thoroughly and remove all rust.

4. Use suitable nuts (12 x 1.5 mm) and plain washers to hold the disc securely against the hub, then mount a dial indicator as shown and measure the runout at 10 mm (0.4 in) in from the outer edge of the disc.

   Brake Disc Runout:
   Service Limit: 0.10 mm (0.004 in)

5. If the disc is beyond the service limit, refinish the rotor with an on-car brake lathe. The Kwik-Lathe produced by Kwik-Way Manufacturing Co. and the "Front Brake Disc Lathe" offered by Snap-on Tools Co. are approved for this operation.

   Max. Refinishing Limit: 21.0 mm (0.83 in)

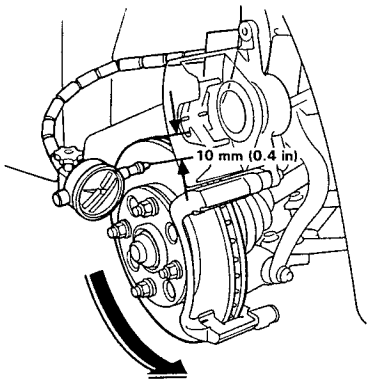

NOTE: A new disc should be refinished if its runout is greater than 0.10 mm (0.004 in).

Thickness and Parallelism Inspection

1. Loosen the front wheel lug nuts slightly, then raise the car and support on safety stands.
   Remove the front wheels.

2. Remove the brake pads (see page 19-6).

3. Using a micrometer, measure disc thickness at eight points, approximately 45° apart and 10 mm (0.4 in) in from the outer edge of the disc.

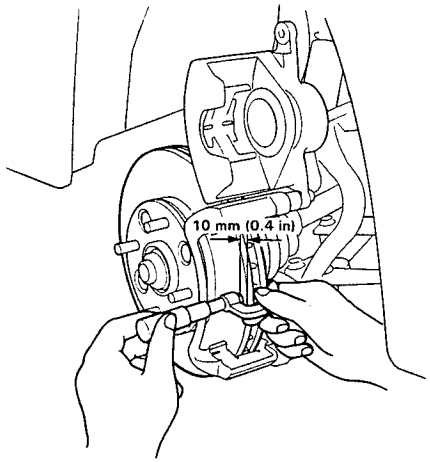

   Brake disc thickness:
   Standard: 23.0 mm (0.91 in)

   Brake Disc Parallelism: 0.015 mm (0.0006 in) max.

   NOTE: This is the maximum allowable difference between any thickness measurements.

4. If the disc is beyond the service limits for parallelism, refinish the rotor with an on-car brake lathe. The Kwik-Lathe produced by Kwik-Way Manufacturing Co. and the "Front Brake Disc Lathe" offered by Snap-on Tools Co. are approved for this operation.

   Max. Refinishing Limit: 21.0 mm (0.83 in)

Bleeding

CAUTION:
- **Use only clean DOT3 or 4 brake fluid.**
- **Make sure no dirt or other foreign matter is allowed to contaminate the brake fluid.**
- **Do not mix different brands of brake fluid as they may not be compatible.**
- **Do not spill brake fluid on the car, it may damage the paint; if brake fluid does contact the paint, wash it off immediately with water.**

NOTE: The reservoir on the master cylinder must be full at the start of bleeding procedure, and checked after bleeding each brake caliper. Add fluid as required. Use only clean DOT3 or 4 brake fluid.

BLEEDING SEQUENCE

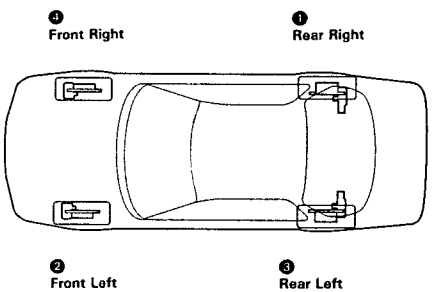

1. Have someone slowly pump the brake pedal several times, then apply steady pressure.
2. Loosen the brake bleed screw to allow air to escape from the system. Then tighten the bleed screw securely.
3. Repeat the procedure for each wheel in the sequence shown above, until air bubbles no longer appear in the fluid.
4. Check the brake performance by road testing.

FRONT:

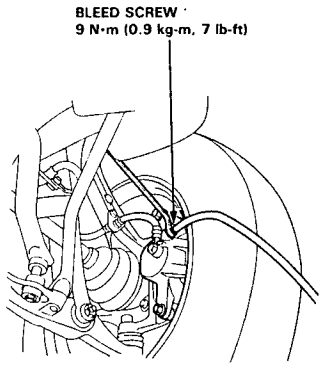

REAR:

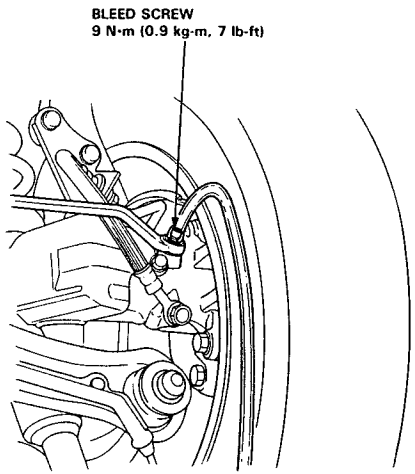

Master Cylinder and Brake Booster

Index/Torque

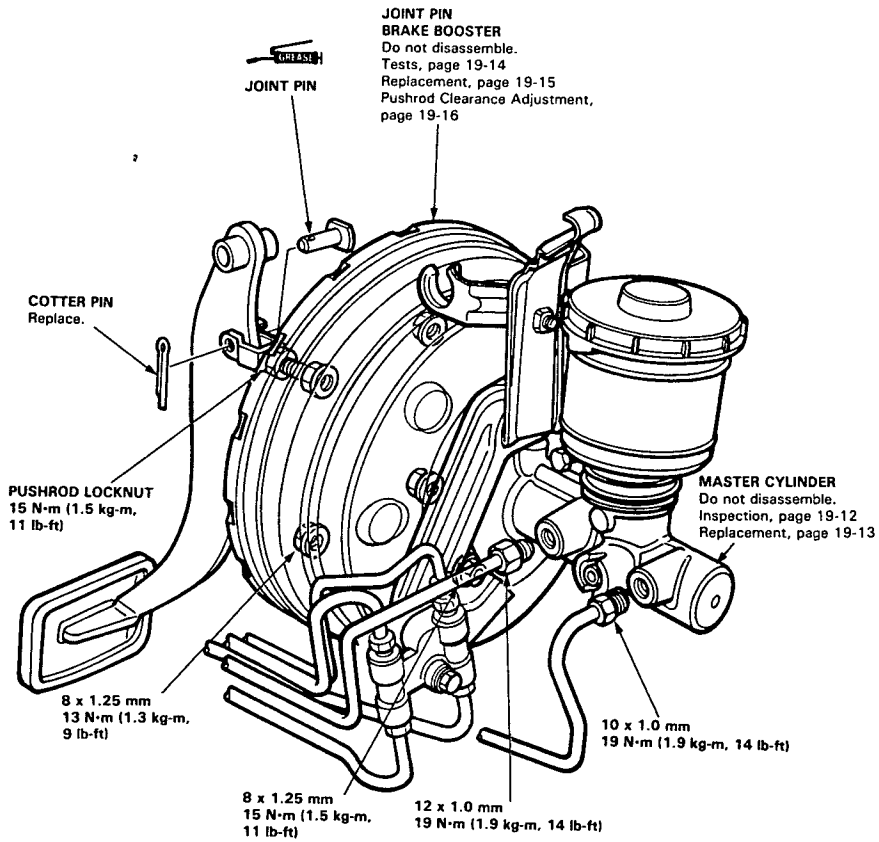

Master Cylinder

Index/Inspection

CAUTION:
- **Be careful not to bend or damage the brake pipes when removing the master cylinder.**
- **Do not spill brake fluid on the car; it may damage the paint; if brake fluid does contact the paint, wash it off immediately with water.**
- **To prevent spills, cover the hose joints with rags or shop towels.**
- **Before reassembling, check that all parts are free of dust and other foreign particles.**
- **Do not try to disassemble the master cylinder assembly. Replace the master cylinder assembly with a new part if necessary.**
- **Make sure no dirt or other foreign matter is allowed to contaminate the brake fluid.**
- **Do not mix different brands of brake fluid as they may not be compatible.**
- **Do not reuse the drained fluid. Use only clean DOT3 or 4 Brake fluid.**
- **When connecting the brake pipes, make sure that there is no interference between the brake pipes and other parts.**

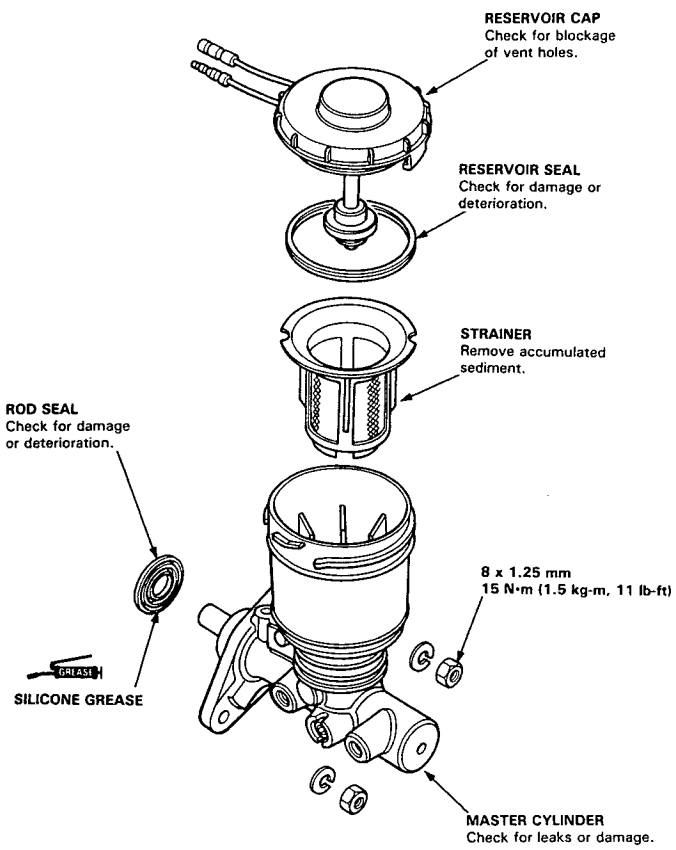

Replacement

CAUTION:
- **Be careful not to bend or damage the brake pipes when removing the master cylinder.**
- **Do not spill brake fluid on the car, it may damage the paint; if brake fluid does contact the paint, wash it off immediately with water.**

1. Remove the reservoir cap from the master cylinder reservoir.
2. The brake fluid may be sucked out through the top of the master cylinder tank.

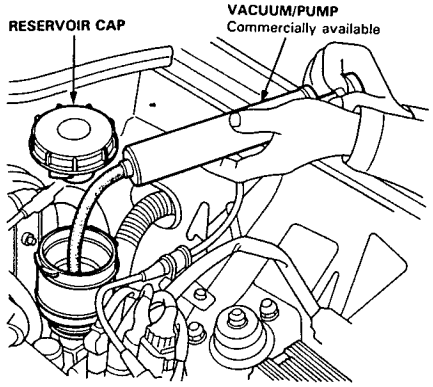

3. Disconnect the brake pipes from the master cylinder.

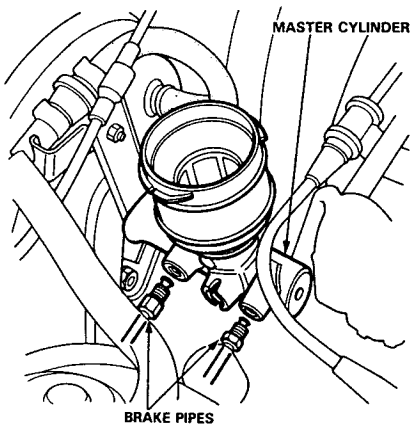

4. Remove the 4-way joint mounting bolt.
5. Disconnect the check valve and the throttle cable from the 4-way joint bracket.
6. Remove the master cylinder mounting nuts, washers and 4-way joint bracket.
7. Remove the master cylinder from the brake booster.

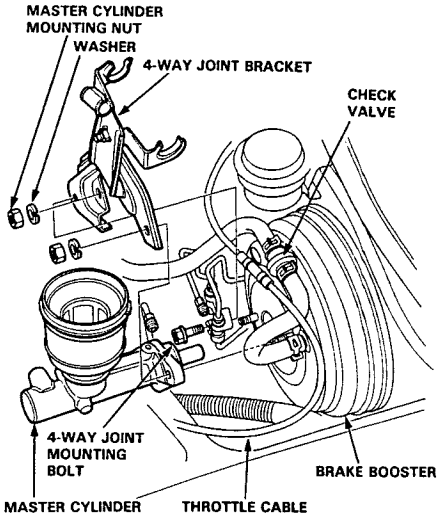

8. Install the master cylinder in the reverse order of removal.
9. Fill the brake reservoir up and bleed the brake system (see page 19-10).

Brake Booster

Tests

Functional Test

1. With the engine stopped, depress the brake pedal several times, then depress the pedal hard and hold that pressure for 15 seconds. If the pedal sinks, the master cylinder, brake line or a brake caliper is faulty.

2. Start the engine with the pedal depressed. If the pedal sinks slightly, the vacuum booster is working. If the pedal height does not vary, the booster or check valve is faulty.

Leak Test

1. Depress the brake pedal with the engine running, then stop the engine. If the pedal height does not vary while depressed for 30 seconds, the vacuum booster is OK. If the pedal rises, the booster is faulty.

   CAUTION: Do not try to disassemble the booster. Replace the booster assembly with a new one.

2. With the engine stopped, depress the brake pedal several times using normal pressure. When the pedal is first depressed, it should be low. On consecutive applications, pedal height should gradually rise. If the pedal position does not vary, check the booster check valve.

Check Valve Test

1. Disconnect the brake booster vacuum hose at the booster.

2. Start the engine and let it idle. There should be vacuum available. If no vacuum is available, the check valve is not working correctly.
   Replace the check valve and retest.

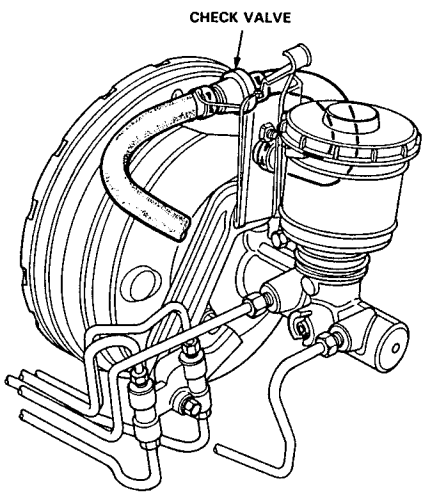

Replacement

1. Remove the master cylinder (see page 19-13).

2. Remove the throttle cable clamp bolt.

3. Disconnect the vacuum tube from the brake booster.

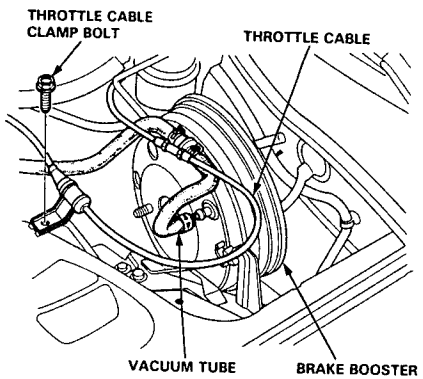

4. Remove the cotter pin and the joint pin.

5. Remove the brake booster mounting nuts.

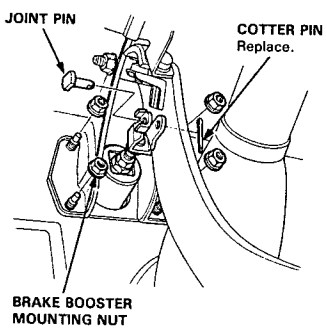

6. Remove the brake booster from the bulkhead.

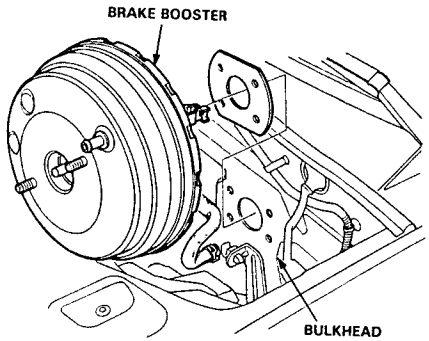

7. Install the brake booster in the reverse order of removal.

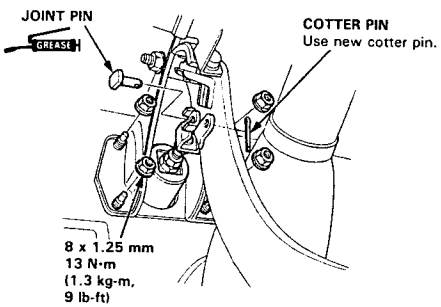

8. Install the master cylinder (see page 19-13).

9. Fill the brake reservoir up and bleed the brake system (see page 19-10).

Brake Booster

Pushrod Clearance Adjustment

NOTE: Master cylinder pushrod-to-piston clearance must be checked and adjustments made, if necessary, before installing master cylinder.

1. Set the special tool on the master cylinder: Push in the center shaft until the top of it contacts with the end of the secondary piston by turning the adjusting nut.

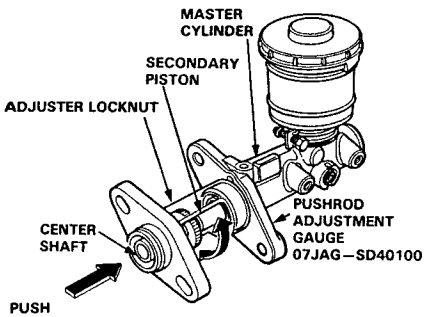

2. Without disturbing the center shaft's position, install the special tool upside down on the booster.

3. Install the master cylinder nuts and tighten to the specified torque.

4. Connect the booster in-line with a vacuum gauge 0–760 mm Hg (0–30 in Hg) to the booster's engine vacuum supply, and maintain a engine speed that will deliver 500 mm Hg (20 in Hg) vacuum.

5. With a feeler gauge, measure the clearance between the gauge body and the adjusting nut as shown.

Clearance: 0–0.4 mm (0–0.02 in)
Preferred: 0–0.2 mm (0–0.01 in)

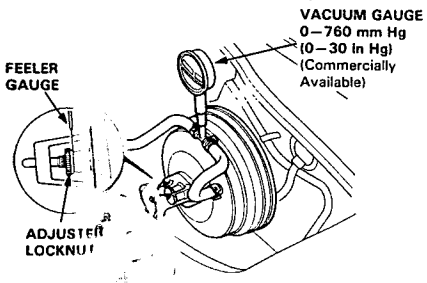

NOTE: If the clearance between the gauge body and adjusting nut is 0.4 mm (0.02 in), the pushrod-to-piston clearance is 0 mm. However, the clearance between the gauge body and adjusting nut is 0 mm, the pushrod-to-piston clearance is 0.4 mm (0.02 in) or MORE. Therefore, it must be adjusted and rechecked.

6. If the clearance is incorrect, loosen the star locknut and adjust the clearance by turning the adjuster in or out while holding the pushrod. Tighten the star locknut to the specified torque and remove the special tool.

NOTE:
- Adjust the clearance while the specified vacuum is applied to the booster.
- Hold the clevis while adjusting.

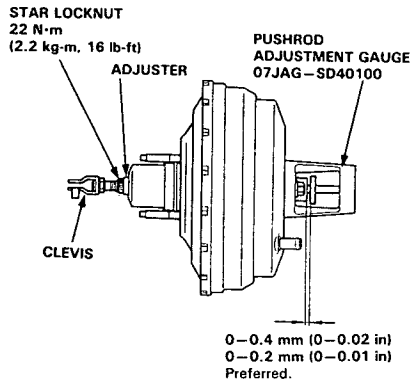

7. Adjust the pushrod length as shown if the booster is removed.

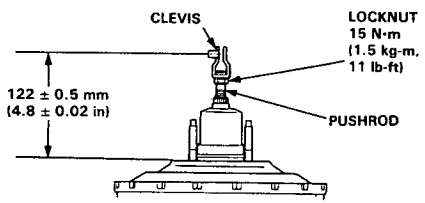

8. Install the master cylinder (see page 19-13).

9. After installation, perform the following inspections and adjust if necessary.
   - Brake pedal height (see page 19-4)
   - Brake pedal free play (see page 19-4)

Rear Brakes

Torque/Inspection

⚠WARNING
- **Never use an air hose or dry brush to clean brake assemblies.**
- **Use an OSHA-approved vacuum cleaner, to avoid breathing brake dust.**
- **Contaminated brake discs or pads reduce stopping ability.**

GREASE : BRAKE CYLINDER GREASE (P/N 08733–B020E) OR EQUIVALENT RUBBER GREASE
GRIEASE : SILICONE GREASE

CAUTION:
- **Do not spill brake fluid on the car; it may damage the paint; if brake fluid does contact the paint, wash it off immediately with water.**
- **To prevent spills, cover the hose joints with rags or shop towels.**
- **Clean all parts in brake fluid and air dry; blow out all passages with compressed air.**
- **Before reassembling, check that all parts are free of dust and other foreign particles.**
- **Replace parts with new ones whenever specified to do so.**
- **Make sure no dirt or other foreign matter is allowed to contaminate the brake fluid.**
- **Do not mix different brands of brake fluid as they may not be compatible.**
- **Do not reuse the drained fluid. Use only clean DOT 3 or 4 brake fluid.**

NOTE:
- Coat piston, piston seal, and caliper bore with clean brake fluid.
- Replace all rubber parts with new ones whenever disassembled.

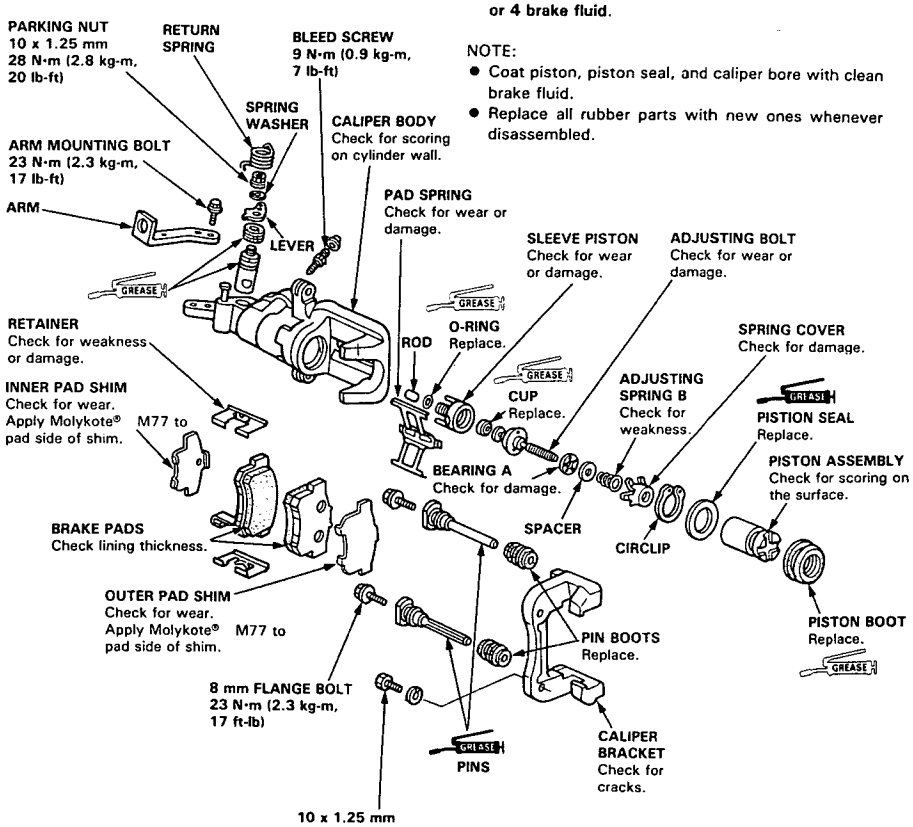

Rear Brake Pads

Inspection/Replacement

⚠WARNING

- **Never use an air hose or dry brush to clean brake assemblies.**
- **Use an OSHA-approved vacuum cleaner, to avoid breathing brake dust.**

1. Block the front wheels, loosen the rear wheel lug nuts slightly, support the rear of car on safety stands, then remove the rear wheels.

2. Remove the caliper shield.

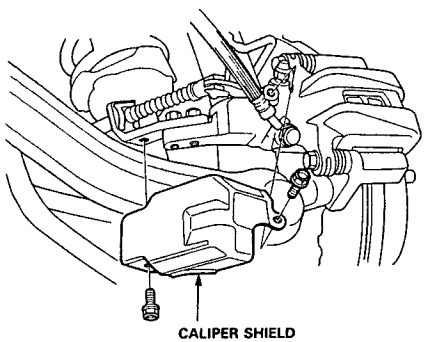

3. Remove the lock pin and clevis pin.
   Remove the cable clip and disconnect the cable from the arm.

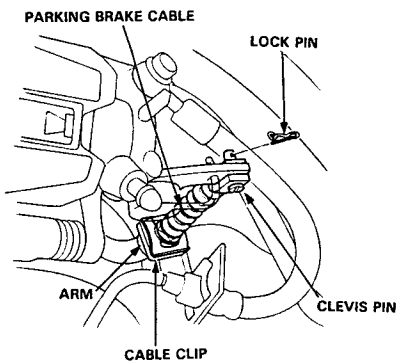

4. Remove the two caliper mounting bolts and the caliper from the bracket.

   CAUTION:
   - **Thoroughly clean the outside of the caliper to prevent dust and dirt from entering inside.**
   - **Support the caliper with a piece of wire so that it does not hang from the brake hose.**

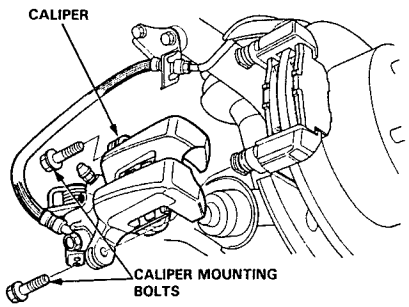

If lining thickness is less than service limit at step 6, replace the rear pads as a set.

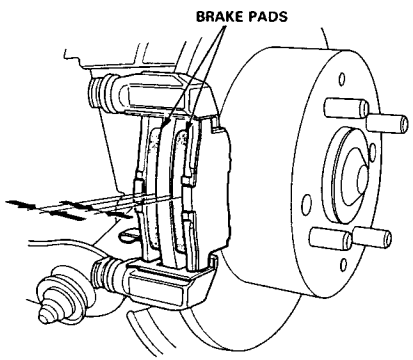

5. Remove the pad shims, pads and pad retainers.

6. Using a vernier caliper, measure the thickness of each brake pad lining.

   Brake Pad Thickness:
   Standard: 9.0 mm (0.35 in)
   Service Limit: 1.6 mm (0.06 in)

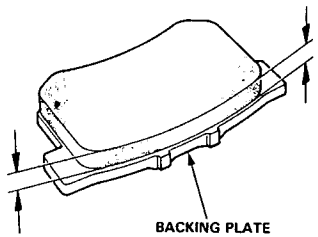

NOTE: Measurement does not include pad backing thickness.

7. Clean the caliper thoroughly; remove any rust, and check for grooves or cracks.

8. Make sure that the pad retainers are installed in the correct positions.

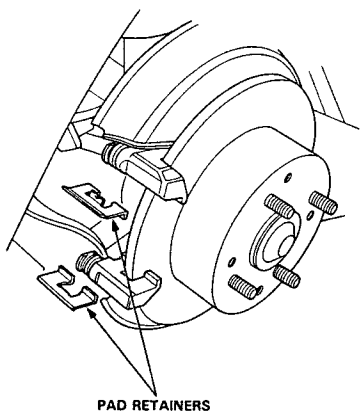

9. Install the new brake pads and pad shims on caliper bracket.

⚠WARNING

- **When reusing the pads, always reinstall the brake pads in their original positions to prevent loss of braking efficiency.**
- **Contaminated brake discs or pads reduces stopping ability. Keep grease off the discs and pads.**

NOTE:
- Apply Molykote® 77 to the shims (see page 19-17).
  Wipe excess grease off the shims.
- Install the inner pad with its wear indicator facing downward.
- Make sure that the pad spring is installed onto the caliper body.

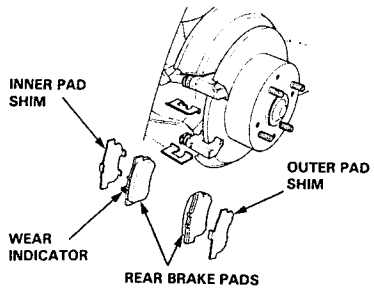

10. Rotate the caliper piston clockwise into place in the cylinder, then align the cutout in the piston with the tab on the inner pad by turning the piston back.

    CAUTION: Lubricate the boot with rubber grease to avoid twisting the piston boot. If piston boot is twisted, back it out so it sits properly.

11. Install the caliper on the caliper bracket and tighten the caliper mounting bolts.

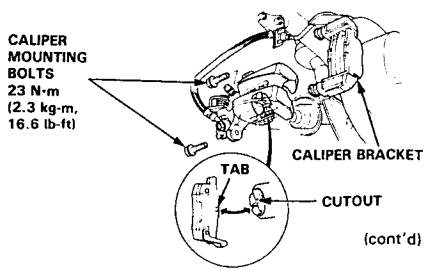

(cont'd)

Rear Brake Pads

Inspection/Replacement (cont'd)

12. Insert the cable through the arm and connect the cable to the lever with the clevis pin and lock pin. Install the cable clip securely.

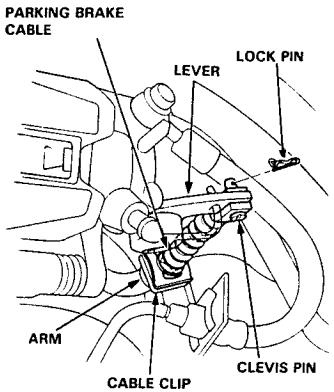

13. Install the caliper shield.

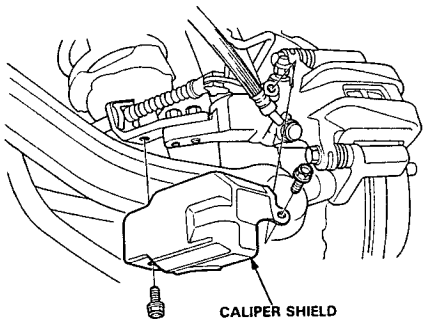

NOTE: Engagement of the brake may require a greater pedal stroke immediately after the brake pads have been replaced as a set. Several applications of the brake pedal will restore the normal pedal stroke.

14. Depress the brake pedal several times to make sure the brakes work, then road-test.

NOTE: Clean the mating surface of the wheel and hub before installing the wheel.

Rear Brake Disc

Runout Inspection

1. Loosen the rear wheel lug nuts slightly, then raise the car and support on safety stands. Remove the rear wheels.
2. Remove the brake pads (see page 19-18).
3. Inspect the disc surface for grooves, cracks, and rust. Clean the disc thoroughly and remove all rust.
4. Use wheel nuts and suitable plain washers to hold the disc securely against the hub, then mount a dial indicator as shown and measure the runout at 10 mm (0.4 in) from the outer edge of the disc.

   Brake Disc Runout:
   Service Limit: 0.10 mm (0.004 in)

5. If the disc is beyond the service limit, refinish the rotor.

   Max. Refinishing Limit: 8.0 mm (0.31 in)

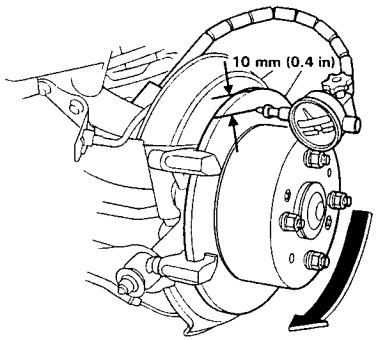

NOTE: A new disc should be refinished if its runout is greater than 0.10 mm (0.004 in).

Thickness and Parallelism Inspection

1. Loosen the rear wheel lug nuts slightly, then raise the car and support on safety stands. Remove the rear wheels.
2. Remove the brake pads (see page 19-18).
3. Using a micrometer, measure disc thickness at eight points, approximately 45° apart and 10 mm (0.4 in) in from the outer edge of the disc.

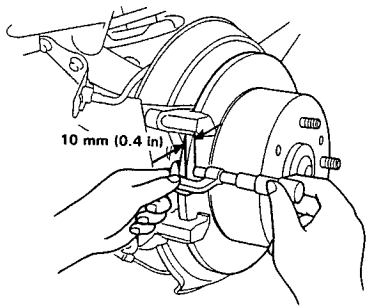

Brake Disc Thickness:
Standard: 10.0 mm (0.39 in)

Brake Disc Parallelism: 0.015 mm (0.0006 in) max.

NOTE: This is the maximum allowable difference between any thickness measurements.

4. If the disc is beyond the service limits, for parallelism, refinish the rotor.

   Max. Refinishing Limit: 8.0 mm (0.31 in)

Rear Caliper

Disassembly

⚠ WARNING
- **Never use an air hose or dry brush to clean brake assemblies.**
- **Use an OSHA-approbed vacuum cleaner to avoid breathing brake dust.**

CAUTION:
- **Do not spill brake fluid on the car; it may damage the paint; if brake fluid does contact the paint, wash it off immediately with water.**
- **To prevent spills, cover the hose joints with rags or shop towels.**
- **Clean all parts in brake fluid and air dry; blow out all passages with compressed air.**

1. Remove the caliper shield (see page 19-18).
2. Disconnect the parking cable (see page 19-18).
3. Remove the banjo bolt and two sealing washers.
4. Remove the two caliper mounting bolts and caliper body from the bracket.

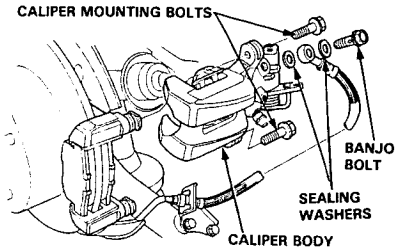

5. Remove the pad spring from the caliper.
6. Remove the piston by rotating the piston using the special tool.
   CAUTION: Avoid damaging the piston and piston boot.

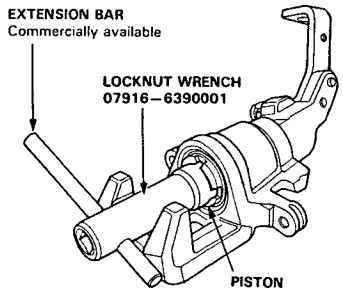

(cont'd)

Rear Caliper

Disassembly (cont'd)

7. Inspect the piston surface for scratches and wear. Replace it if necessary.

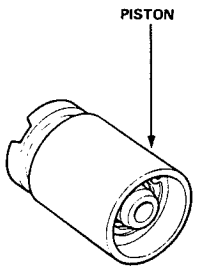

8. Remove the piston boot and piston seal.

CAUTION: Take care not to damage the cylinder bore.

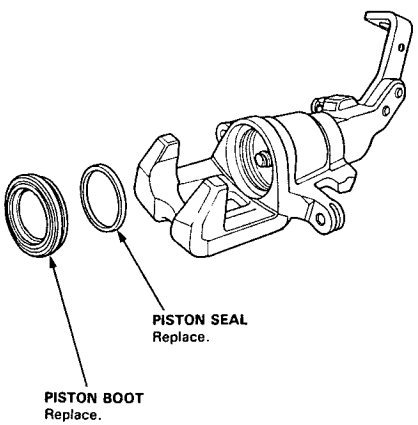

9. Install the special tool between the caliper body and spring cover.

CAUTION: Be careful not to damage the inside of the caliper cylinder during caliper disassembly.

10. Position the locknuts as shown, then turn the shaft until the plate just contacts the caliper body.

NOTE: Do not compress the spring under the spring cover.

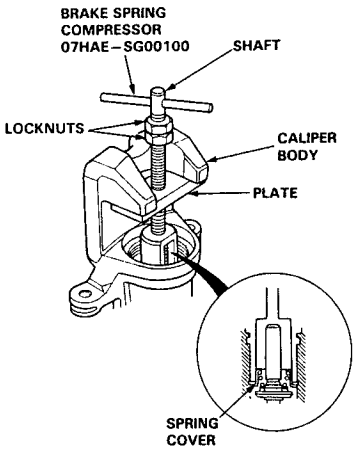

11. Turn the shaft clockwise 1/4 – 1/2 to compress the adjusting spring B in the caliper body.

CAUTION: To prevent damage to the inner components, do not turn the shaft more than 1/2 turn.

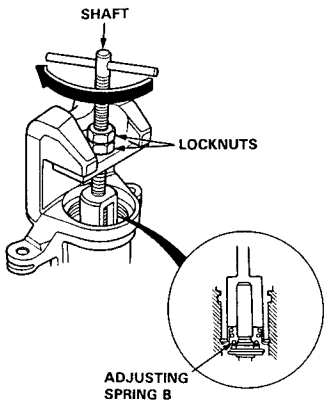

12. Lower the locknuts fully, and tighten the locknuts securely.

NOTE: Keep the locknuts in this position until you reinstall the circlip.

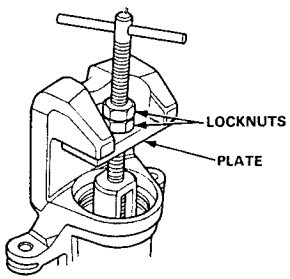

13. Remove the circlip with snap ring pliers.

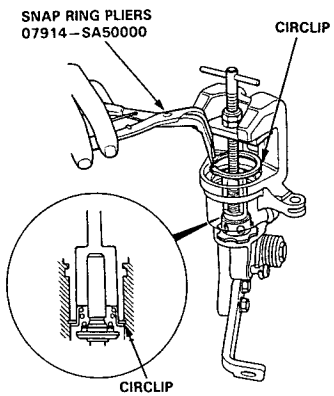

14. Hold the plate with your fingers and turn the shaft counterclockwise. Then, remove the special tool from the caliper.

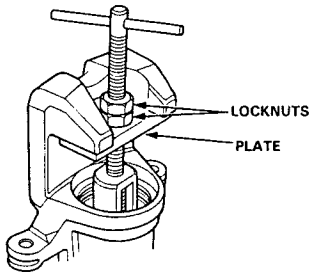

15. Remove the adjusting bolt.

16. Remove the spring cover, adjusting spring B, spacer, bearing A and cup from the adjusting bolt.

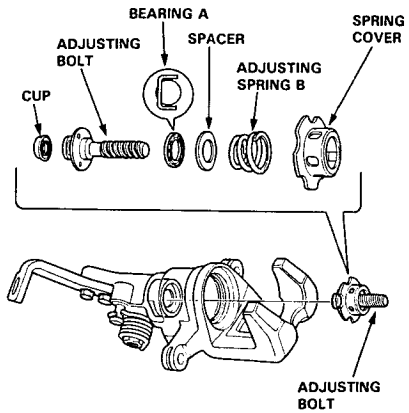

(cont'd)

Rear Caliper

Disassembly (cont'd)

17. Remove the sleeve piston, and remove the pin from the cam.

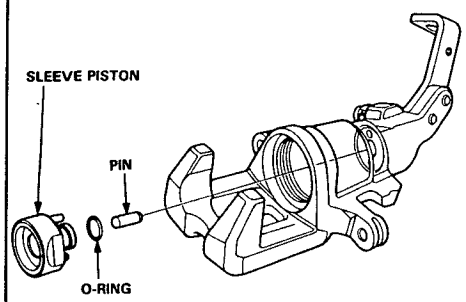

18. Remove the return spring.

19. Remove the parking lever and cam as an assembly from the caliper body.

    CAUTION: Do not loosen the parking nut with the cam installed in the caliper body. If the lever and shaft must be separated, hold the lever in a vise and loosen the parking nut.

20. Remove the cam boot.

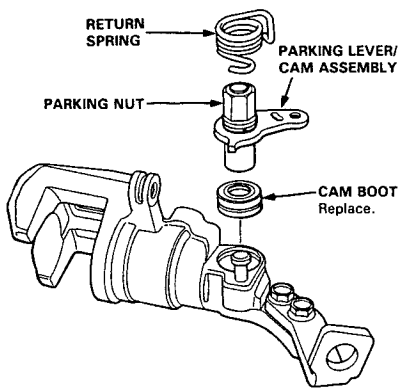

Reassembly

CAUTION:
- **Do not spill brake fluid on the car; it may damage the paint; if brake fluid does contact the paint, wash it off immediately with water.**
- **Before reassembling, check that all parts are free of dust and other foreign particles.**
- **Replace parts with new ones whenever specified to do so.**
- **Make sure no dirt or other foreign matter is allowed to contaminate the brake fluid.**
- **Do not mix different brands of brake fluid as they may not be compatible.**
- **Do not reuse the drained fluid. Use only clean DOT 3 or 4 brake fluid.**

1. Pack all cavities of the needle bearing with commercially available assembly lube.

2. Coat the new cam boot with commercially available assembly lube and install it in the caliper body.

3. Apply commercially available assembly lube to the pin contacting area of the cam.

4. Install the cam and lever assembly into the caliper body.

5. Install the return spring.

CAUTION:
- **When the cam and lever were separated, be sure to assemble them before installing the cam in the caliper body. Install the lever and spring washer, apply locking agent to the threads, and tighten the parking nut while holding the lever with a vise.**
- **Avoid damaging the cam boot since it must be installed before the cam.**
- **When installing the cam, do not allow the cam boot lips to turn outside in.**

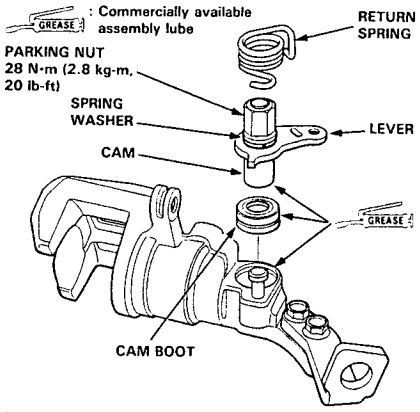

6. Install the pin in the cam.

7. Install a new O-ring on the sleeve piston.

8. Install the sleeve piston so the hole in the bottom of the piston is aligned with the pin in the cam, and two pins on the piston are aligned with the holes in the caliper.

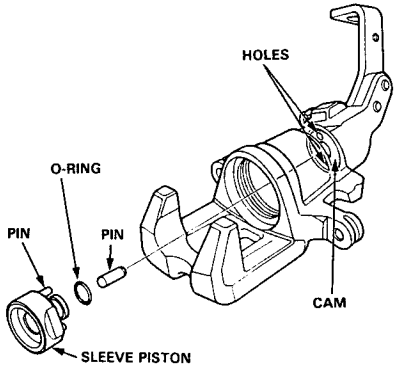

9. Install a new cup with its groove facing the bearing A side on the adjusting bolt.

10. Fit the bearing A, spacer, adjusting spring B and spring cover on the adjusting bolt, and install in the caliper cylinder.

    NOTE: Install the bearing A with its open end facing the spacer.

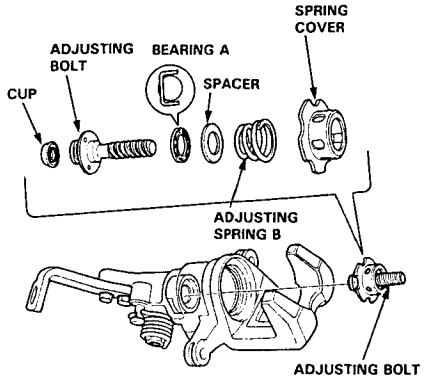

11. Install the special tool and turn the shaft until it bottoms out.

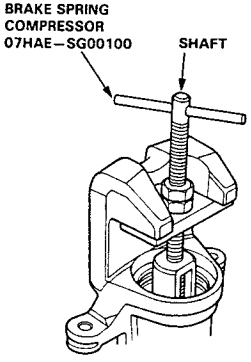

(cont'd)

Rear Caliper

Reassembly (cont'd)

12. Check that the flared end of the spring cover is below the circlip groove.

13. Install the circlip in the groove, then remove the special tool.

    NOTE: Check that the circlip is seated in the groove properly.

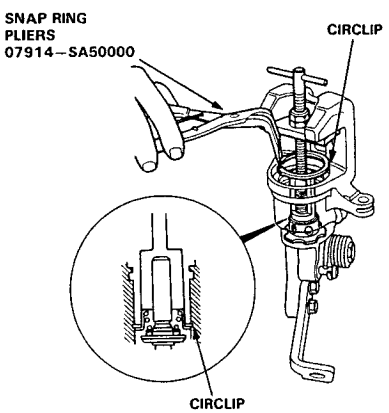

14. Coat the new piston seal with silicone grease and install it in the caliper.

15. Apply the brake cylinder grease (P/N: 08733 –B020E) or equivalent rubber grerase to the sealing lips and inside of a new piston boot, and install it in the caliper.

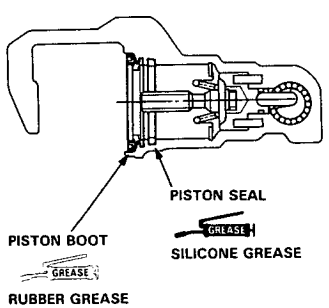

16. Coat the outside of the piston with brake fluid and install it on the adjusting bolt while rotating it clockwise.

    CAUTION: Avoid damaging the piston and piston boot.

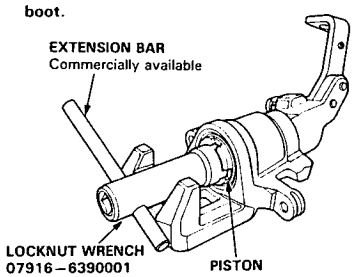

17. Install the pad spring on the caliper.

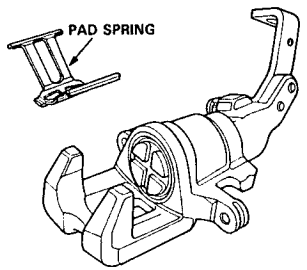

18. Install the brake pad retainers and brake pads.

19. Install the caliper on the caliper bracket and tighten the caliper mounting bolts.

20. Connect the brake hose to the caliper with new sealing washers and tighten the banjo bolt.

21. Connect the parking brake cable to the arm on the caliper.

22. Fill the see brake reservoir up and bleed the brake system (see page 19-10).

23. Operate the brake pedal several times, then adjust the parking brake lever.

    NOTE: Before adjustments, make sure the lever on the caliper contacts the brake caliper pin (see page 19-4).

24. Install the caliper shield and tighten the bolts.

Brake Hoses/Pipes

Inspection

1. Inspect the brake hoses for damage, leaks, interference or twisting.

2. Check the brake lines for damage, tipping, rusting or leakage. Also check for bent brake lines.

3. Check for leaks at hose and line joints or connections, and retighten if necessary.

   CAUTION: Replace the brake hose clip whenever the brake hose is serviced.

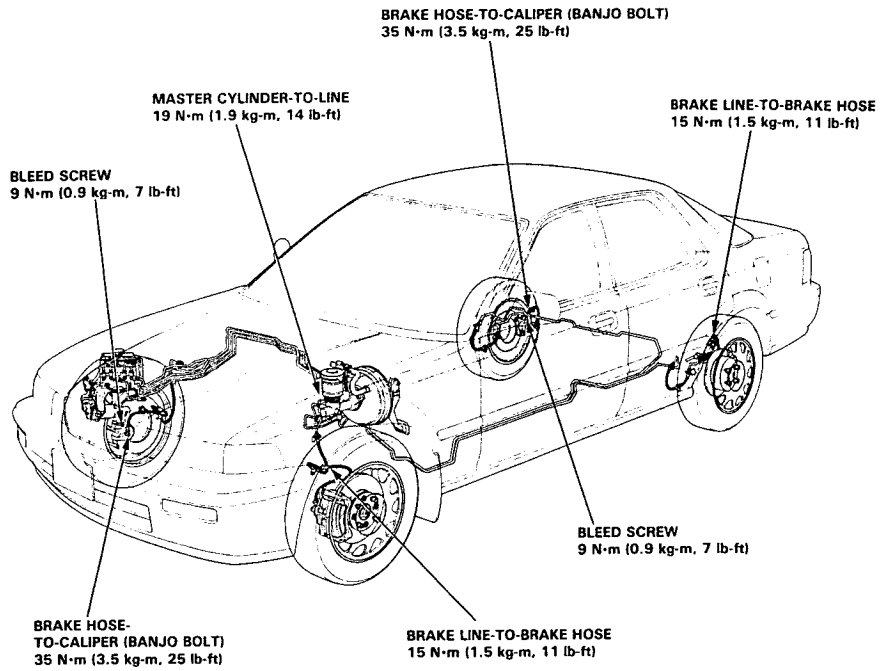

Parking Brake

Disassembly and Reassembly

CAUTION: The parking brake cables must not be bent or distorted. This will lead to stiff operation and premature cable failure.

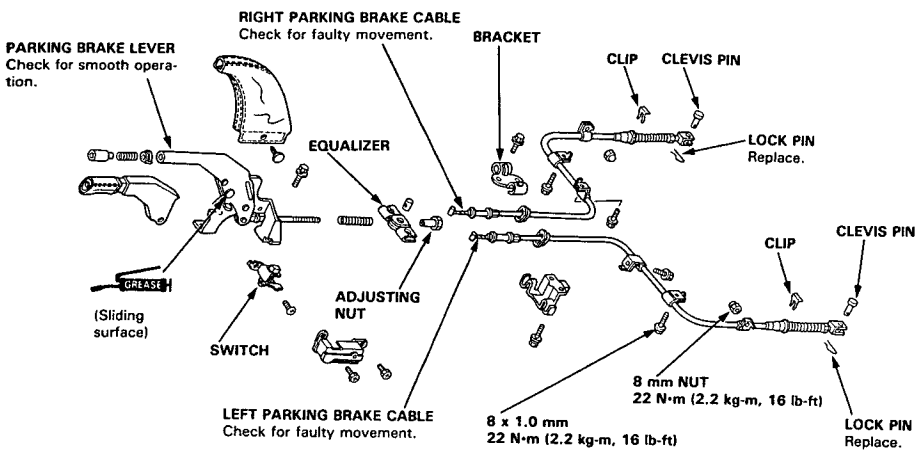

Anti-lock Brake System (ABS)

Features/Construction/Operation

In a conventional brake system, if the brake pedal is depressed very hard, the wheels can lock before the vehicle comes to a stop. In such a case, the stability of the vehicle is reduced if the rear wheels are locked, and maneuverability of the vehicle is reduced if the front wheels are locked, creating an extremely unstable condition.
The Anti-lock Brake System (ABS) modulates the pressure of the brake fluid applied to each caliper, thereby preventing the locking of the wheels, whenever the wheels are likely to be locked due to hard braking. It then restores normal hydraulic pressure when there is no longer any possibility of wheel locking.

Features

- Increased braking stability can be achieved regardless of changing driving conditions.
- The maneuverability of the vehicle is improved as the system prevents the front wheels from locking.
- When the anti-lock brake system goes into action, a kickback is felt on the brake pedal.
- The system is equipped with a self-diagonosis function. When an abnormality is detected, the ABS indicator light comes on. The location of the system's trouble can be diagnosed from the frequency of the ABS indicator light blinks.
- This system has individual control of the front wheels and common control ("Select Low") for the rear wheels, "Select Low" means that the rear wheel that would lock first (the one with the lowest resistance to lock-up) determines anti-lock brake system activation for both rear wheels.
- The system has a fail-safe function that allows normal braking if there's a problem with the anti-lock brake system.

Construction

In addition to the conventional braking system, the anti-lock brake system is composed of: gear pulsers attached to the rotating part of individual wheels; wheel sensors, which generate pulse signals corresponding to the revolution of the gear pulsers; ABS control unit, which controls the working of the anti-lock brake system by performing calculations based on the signals from the individual wheel sensors and the individual switches; modulator unit, which adjusts the hydraulic pressure applied to each caliper on the basis of the signals received from the ABS control unit; an accumulator, in which high-pressure brake fluid is stored, a pressure switch, which detects the pressure in the accumulator and transmits signals to the ABS control unit; a pump assembly, which supplies the high-pressure working fluid to the accumulator by means of a pump; a motor relay for driving the pump assembly; a fail-safe relay, which cuts off the solenoid valve ground circuit when the fail-safe device is at work; and, an ABS indicator light.

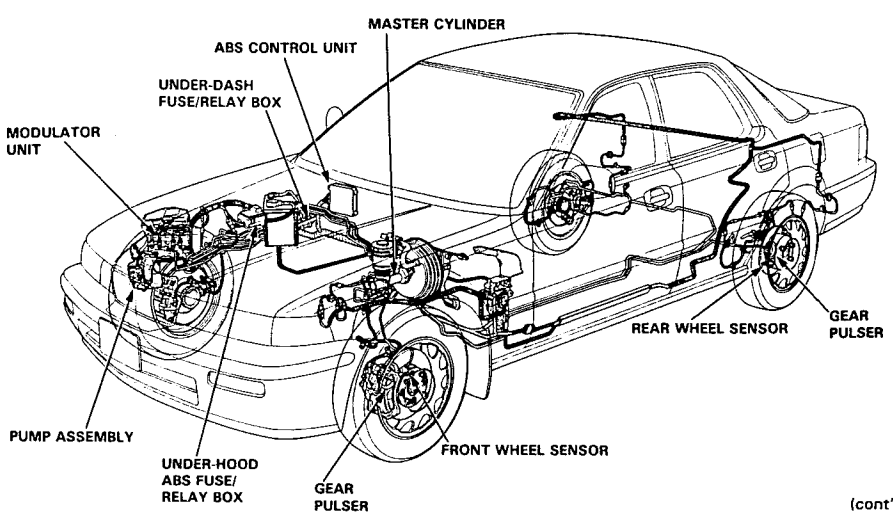

(cont'd)

Features/Construction/Operation (cont'd)

Master Cylinder

1. Construction
   A tandem master cylinder is used to improve the safety of the braking system. In addition, center valves are used so as to match the anti-lock brake system operation.
   The master cylinder has one reservoir tank which is connected to the cylinder sections by two small holes. It has two pistons: primary and secondary, which are crisscross connected with the calipers so that the fluid pressure works separately on each system (front right wheel & rear left wheel, and front left wheel & rear right wheel).
   A stop bolt for controlling movement of the primary piston is provided at the side of the master cylinder body. A reed switch for detecting the brake fluid volume is also provided in the cap of the reservoir tank.

2. Operation
   When the brake pedal is depressed, the secondary piston is pushed through the brake booster and the center valve B is closed so that fluid pressure is generated on the secondary side. At the same time, the primary piston is pushed by the secondary fluid pressure and the center valve A is closed so that braking fluid pressure is generated both on the primary and secondary sides.
   When the brake pedal is released, the primary and secondary pistons are returned to the original position by the brake fluid pressure and piston spring.

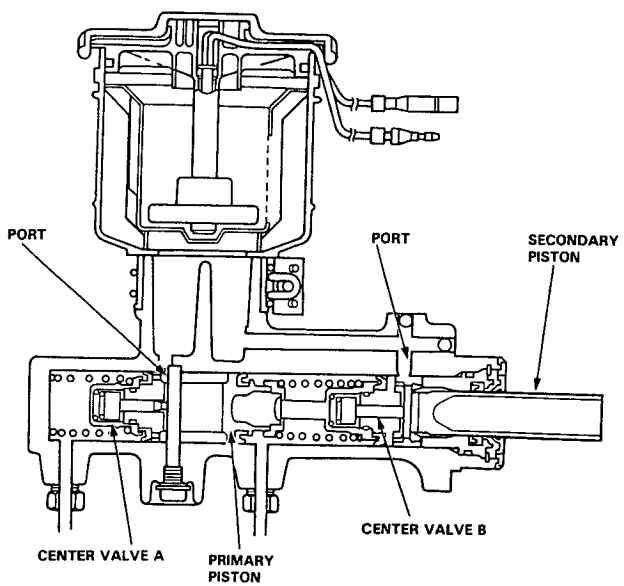

3. Responses when fluid is leaking
   (1) In case of leaking from the primary system:
   Since the fluid pressure on the primary side does not rise, the primary piston is pushed by the fluid pressure of the secondary piston and the tension of the piston spring until the end hits on the cylinder, the braking is performed by the fluid pressure on the secondary side.

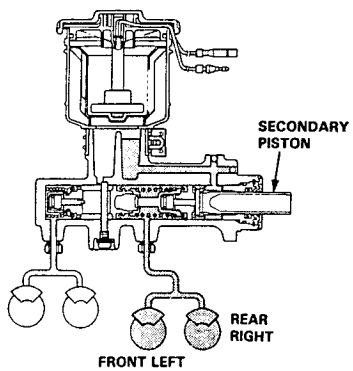

   (2) In case of leaking from the secondary system:
   The secondary piston does not produce fluid pressure, keeps moving ahead, hits on the end surface of the primary piston so that the primary piston is pushed under the same condition as an ordinary rod. Therefore, the braking is conducted by the fluid pressure on the primary side.

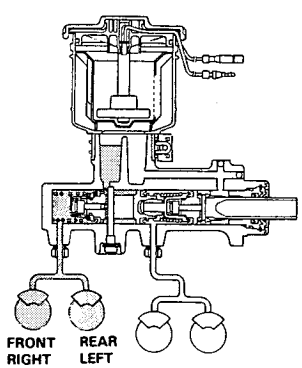

(cont'd)

Anti-lock Brake System (ABS)

Features/Construction/Operation (cont'd)

Wheel Sensor

The wheel sensor is a contactless type that detects the rotating speed of a wheel. It is composed of a parmanent magnet and coil. When the gear pulsers attached to the rotating parts of each wheel (front wheel: outboard joint of the driver-shaft, rear: hub bearing unit) turn, the magnetic flux around the coil in the wheel sensor alternates, generating voltages with frequency in proportion to wheel rotating speed. These pulses are sent to the ABS control unit and the ABS control unit identifies the wheel speeds.

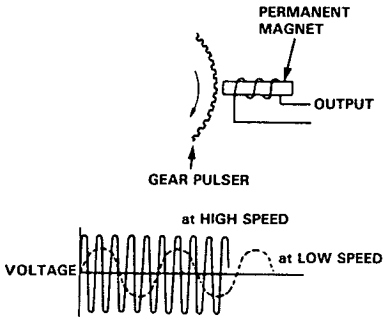

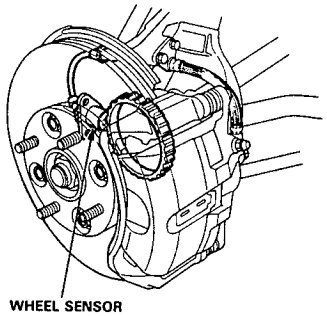

ABS Control Unit

The ABS control unit consists of a main function section, which controls the operatin of the anti-lock brake system, and subfunction, which controls the pump motor and "self-diagnosis".

1. Main Function
   The main function section of the ABS control unit performs calculations on the basis of the signals from each wheel sensor and controls the operation of the anti-lock brake system by putting into action the solenoid valves in the modulator unit for each front brake and for the two rear brakes.
2. Sub-Function
   The sub-function section gives driving signals to the pump motor and also gives "self-diagnosis" signals, necessary for backing up the anti-lock brake system.

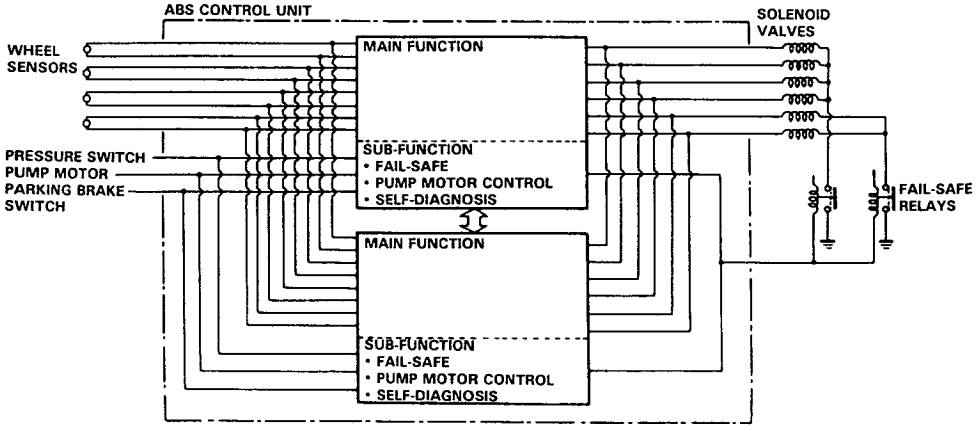

1. Self-diagnostic Function
   Since the anti-lock brake system modulates the braking pressure when a wheel is about to lock, regardless of the driver's intention, the system operation and the braking power will be impaired if there is a malfunction in the system. To prevent this possibility, at speeds above 6 mph (10 km/h), the self-diagnosis function, provided in the sub-function of the ABS control unit, monitors the main system functions. When an abnormality is detected, the ABS indicator light goes on. There is also a check mode of the self-diagnosis system itself; when the ignition switch is first turned on, the ABS indicator light comes on and stays on for a few seconds after the engine starts, to signify that the self-diagnosis system is functional.

2. Fail-safe Function
   When abnormality is detected in the control system by the self-diagnosis, the solenoid operations are suspended by turning off the relay (fail-safe relay) which disconnects the ground lines of all the solenoid valves to inhibit anti-lock brake system operations. Under these conditions, the braking system functions just as an ordinary one, maintaining the necessary braking function. When the ABS indicator light is turned on, it means the fail-safe is functioning.

Modulator Unit

Modulators for each wheel and solenoid valves are integrated in the modulator unit.
The modulators for front and rear brakes are of independent construction and are positioned vertically for improved maintainability. The modulators for rear brakes are provided with a Proportioning Control Valve function in order to prevent the rear wheel from locking when the anti-lock brake system is malfunctioning or the anti-lock brake system is not activated.
The solenoid valve features quick response (5 ms or less).
The inlet and outlet valves are integrated in the solenoid valve unit. There are three solenoid valves, one for each front wheel, and one for both rear wheels.

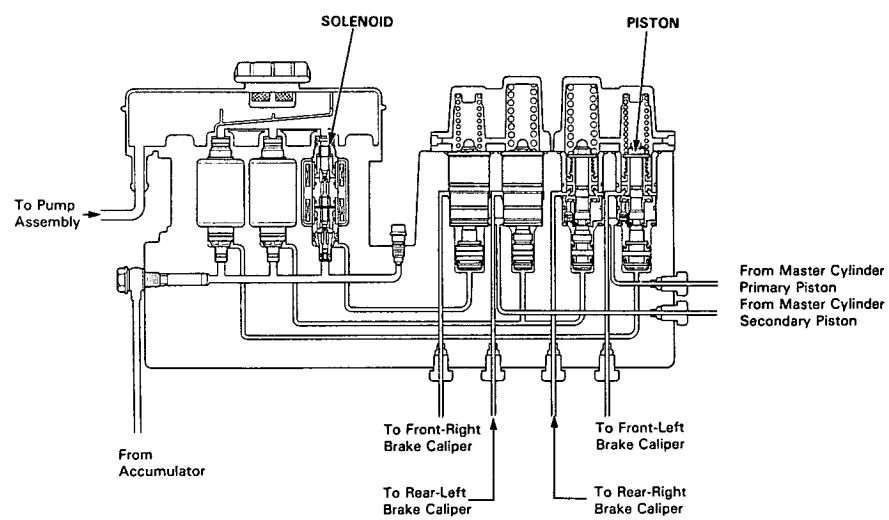

(cont'd)

Anti-lock Brake System (ABS)

Features/Construction/Operation (cont'd)

Accumulator

The accumulator is a pneumatic type which accumulates high-pressure brake fluid fed from the pump incorporated in the pump assembly. When the anti-lock brake system operates, the accumulator and the pump supply high-pressure brake fluid to the modulator valve via the inlet side of the solenoid valve.

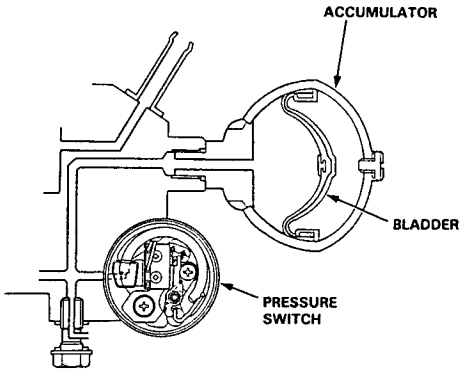

Pressure Switch

The pressure switch monitors the pressure accumulation (pressure from the pump) in the accumulator and is turned off when the pressure becomes lower than a prescribed level. When the pressure switch is turned off, the switching signal is sent to the ABS control unit. Upon receiving the signal, the ABS control unit activates the pump motor relay to operate the motor. If the pressure doesn't reach the prescribed value, the ABS indicator light comes on.

Operation

When the pressure in the accumulator rises, the Bourdon tube in the pressure switch deforms outwards. When the free end of the Bourdon tube moves more than the prescribed amount, the micro-switch is activated by the force of the spring attached to the sensing lever. When the pressure in the accumulator decreases due to anti-lock brake system operations, the Bourdon tube moves in the direction opposite to the one described above, and the micro-switch is eventually turned off. Upon receiving this signal, the ABS control unit activates the motor relay to operate the motor.

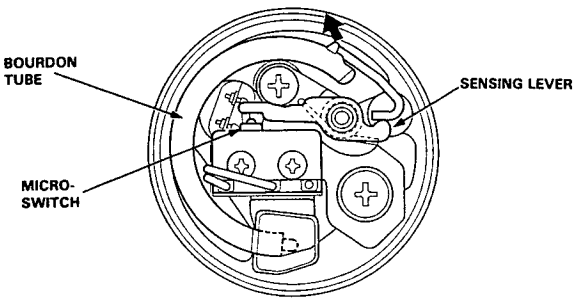

Pump Assembly

The pump assembly consists of a motor, filter, guide, piston rod and cylinder body. Since a guide is positioned off-set to the center of the motor shaft, the rotation of the motor and cylinder body provides the reciprocating motion to the piston rod. The brake fluid is thus pressurized and fed to the relief valve, accumulator and modulator unit.
As the pressure in the accumulator exceeds the prescribed level, the pressure switch is turned on. Approximately 0.5 seconds after receiving the ON-signal, the ABS control unit stops the motor relay operation. In this state, the pressure in the accumulator reaches 23,000 kPa (230 kg/cm², 3,271 psi).
If the pressure doesn't reach the prescribed value after the motor has operated continuously for a specified period, the ABS control unit stops the motor and activates the ABS indicator light.

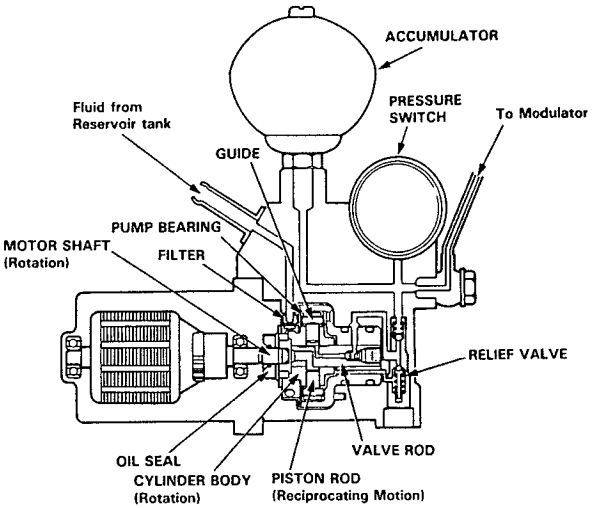

Anti-lock Brake System (ABS) Indicator Light

The ABS control unit turns on the ABS indicator light when one or more of the below described abnormalities is detected. This is only a partial list.

- When the operating time of the motor in the pump assembly exceeds the specified period.
- When vehicle running time exceeds 30 seconds without releasing the parking brake lever.
- When one of the rear wheels is locked during running.
- When absence of speed signals from any of the four wheel sensors is detected.
- When the activation time of all solenoids exceeds a given time or an open circuit is detected in the solenoid system.
- When solenoid output is not detected in the simulated anti-lock brake system operation carried out during running at speeds of 6 mph (10 km/h) or more.

To check the ABS indicator light bulb, the light is activated when the ignition switch is turned on. It is turned off after the engine is started if there is no abnormality in the system.

(cont'd)

Anti-lock Brake System (ABS)

Features/Construction/Operation (cont'd)

Operation

1. Ordinary Braking Function
   In ordinary brake operations, the cut-off valve in the modulator is open, transmitting the hydraulic pressure from the master cylinder to the brake calipers via chamber A and chamber B.
   Chamber C is connected to the reservoir through the outlet valve, which is normally open. It is also connected to the hydraulic pressure source (pump, accumulator, pressure switch, etc.) via the inlet valve, which is normally closed. Chamber D serves as an air chamber. Under these conditions, the pressures of chambers C anc D are maintained at about atmospheric pressure, permitting regular braking operations.

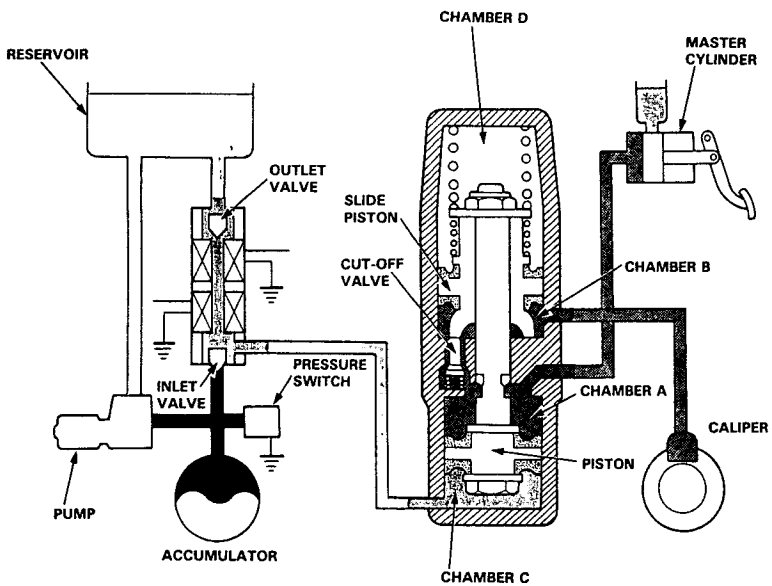

If brake inputs (force exerted on brake pedal) are excessively large and a possibility of wheel locking occurs, the ABS control unit operates the solenoid valve, closing the outlet valve and opening the inlet valve. As a result, the high pressure is directed into chamber C, the piston is pushed upward, causing the slide piston to move upward and the cut-off valve to close. As the cut-off valve closes, the flow from the master cylinder to the caliper is interrupted, the volume of chamber B, which is connected to the caliper, increases, and the fluid pressure in the caliper declines.
When both of the valves, inlet and outlet, are closed (when only the outlet valve is activated) the pressure in the caliper is maintained constant.
When the possibility of wheel locking ceases, it is necessary to restore the pressure in the caliper. The solenoid valve is therefore turned off (outlet valve: open, inlet valve closed).

Process	Caliper Pressure	Outlet Valve		Inlet Valve	
		Electric Power	Hydraulic Circuit	Electric Power	Hydraulic Circuit
Caliper pressure declining	↘	ON	Close	ON	Open
Caliper pressure constant	→	ON	Close	OFF	Close
Caliper pressure increasing	↗	OFF	Open	OFF	Close

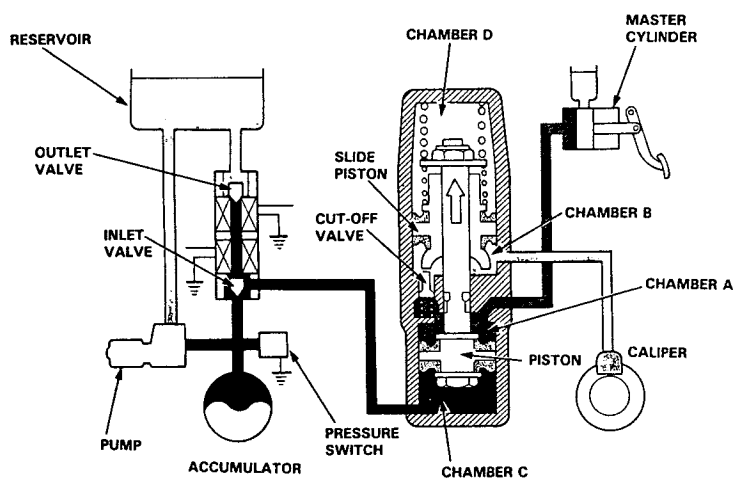

(cont'd)

Anti-lock Brake System (ABS)

Features/Construction/Operation (cont'd)

2. Slide Piston Function
When the car is used on rough roads where the tires sometimes lose adhesion, the anti-lock brake system may function excessively, causing a very large volume of brake fluid to flow into chamber C. When this occurs, the piston is moved excessively, resulting in an abnormal loss of pressure in chamber B. In order to overcome this problem, the slide piston is kept in proper position by spring force to prevent the pressure in chamber B from becoming negative.

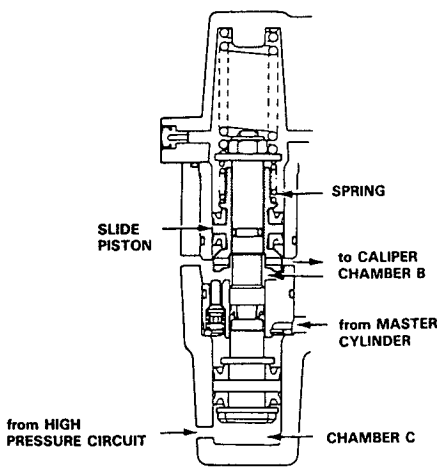

3. Kickback
When the anti-lock brake system is functioning, the piston moves upward, the volume of chamber B increases, and the fluid pressure on the caliper side is reduced. At the same time, the volume of chamber A is reduced and the brake fluid is returned to the master cylinder. When the brake fluid is pushed back to the master cylinder, the driver can feel the functoning of the anti-lock brake system because the brake pedal is kicked back.

4. Proportioning Control Valve Function
In the modulator for the rear wheels, the diameters of the piston and the slide piston are distinctly different. This provides a Proportioning Control Valve function to prevent the rear wheels from locking during an emergency stop.

(1) Before the Turning Point:
1) When the fluid pressure from the master cylinder is below the turning point, the cut-off valve is always pushed downward by the force of the slide piston and its spring.
Under these conditions, there is a gap between the cut-off valve shoulder and the sleeve. Chamber A and chamber B are therefore connected through the gap. The pressure from the master cylinder flows into the rear calipers through chamber A and chamber B.

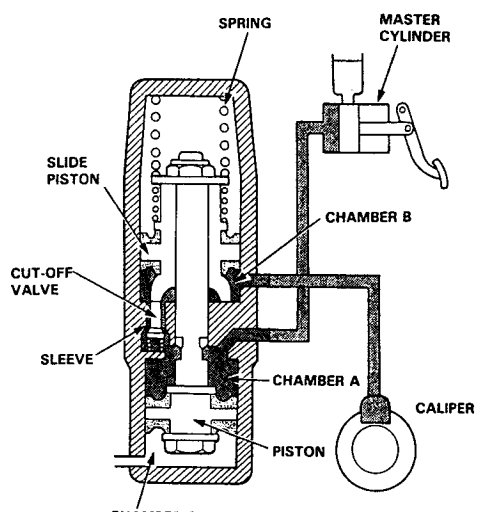

(cont'd)

Features/Construction/Operation (cont'd)

2) When the fluid pressure from the master cylinder reaches the turning point, the force on the slide piston overcomes the force of the spring, causing the slide piston to travel upward.
The cut-off valve, previously being in contact with the bottom of the slide piston, then moves upward and the cut-off valve shoulder hits the sleeve, blocking the fluid passages (the fluid pressure at this point is called the turning point).

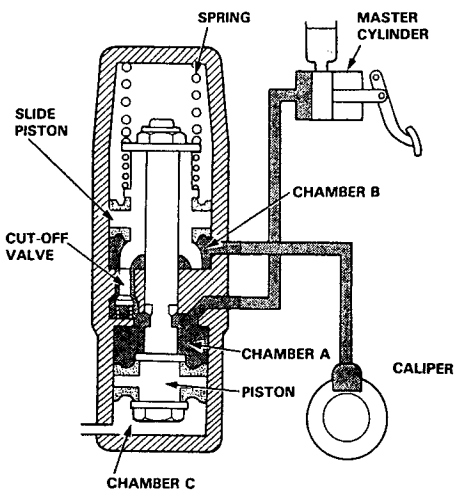

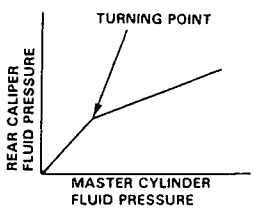

(2) After the turning point:
As the fluid pressure from the master cylinder increases, the pressure in chamber A becomes higher, causing a force to push down the large diameter portion of the piston. Consequently, the slide piston comes down, the cut-off valve is pushed downward by the bottom of the slide piston, allowing chambers A and B to connect momentarily. As this occurs, pressure in chamber B increases, the slide piston is pushed upward, the cut-off valve goes up, and the connection between chamber A and chamber B is blocked again. As described above, when the pressure in the master cylinder is above the turning point, the slide piston reduces the pressure in the rear caliper to the prescribed amount by repeating this process.

Circuit Diagram

FUSE No.	FUSE LABEL NAME
2	ECU
1	BACK-UP LIGHTS
7	HEATER CONTROL RELAY

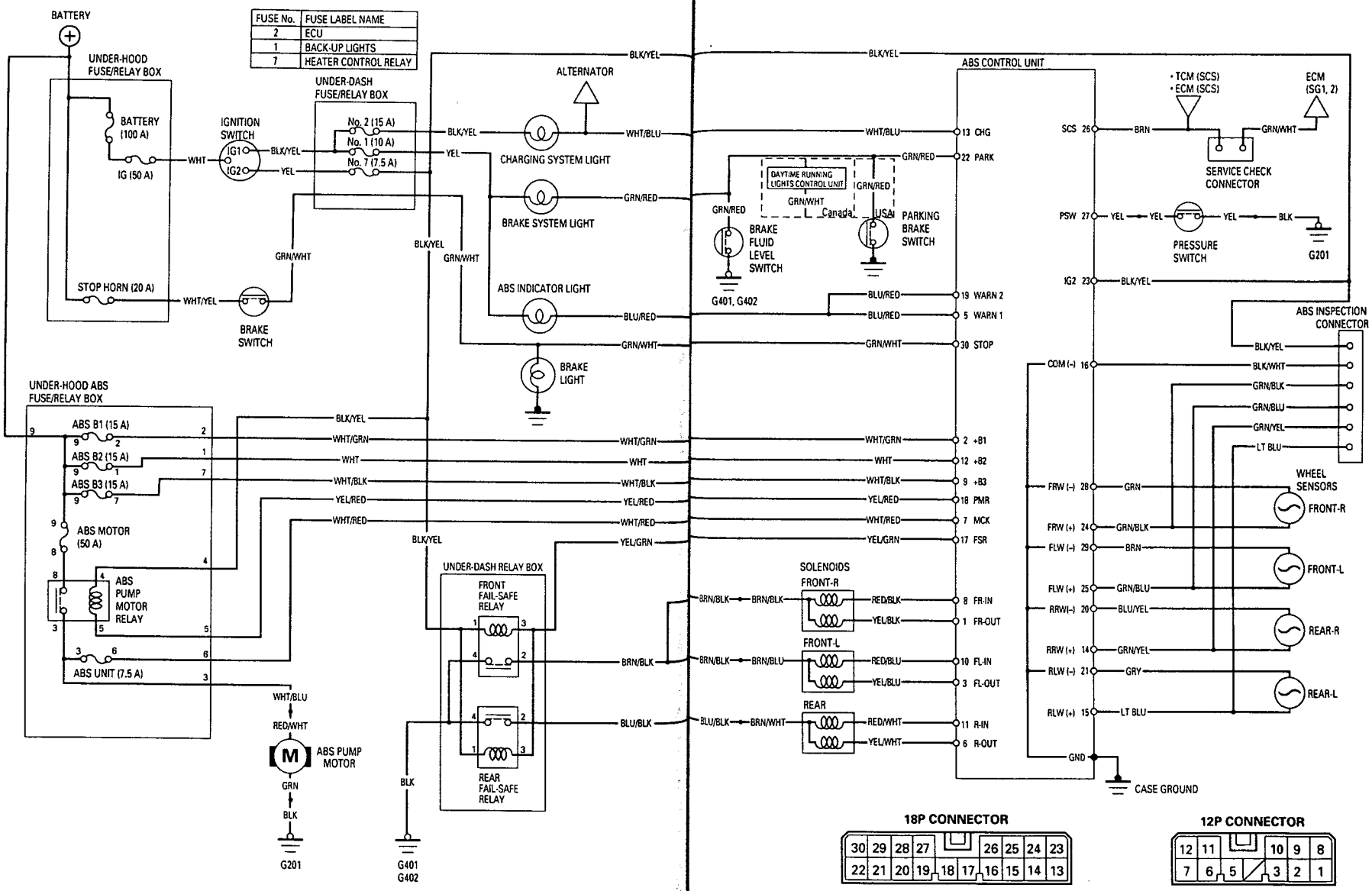

18P CONNECTOR

30	29	28	27			26	25	24	23
22	21	20	19	18	17	16	15	14	13

ABS CONTROL UNIT CONNECTOR
View from terminal side.

12P CONNECTOR

12	11		10	9	8
7	6	5	3	2	1

ABS CONTROL UNIT CONNECTOR
View from terminal side.

Wiring/Connector Location

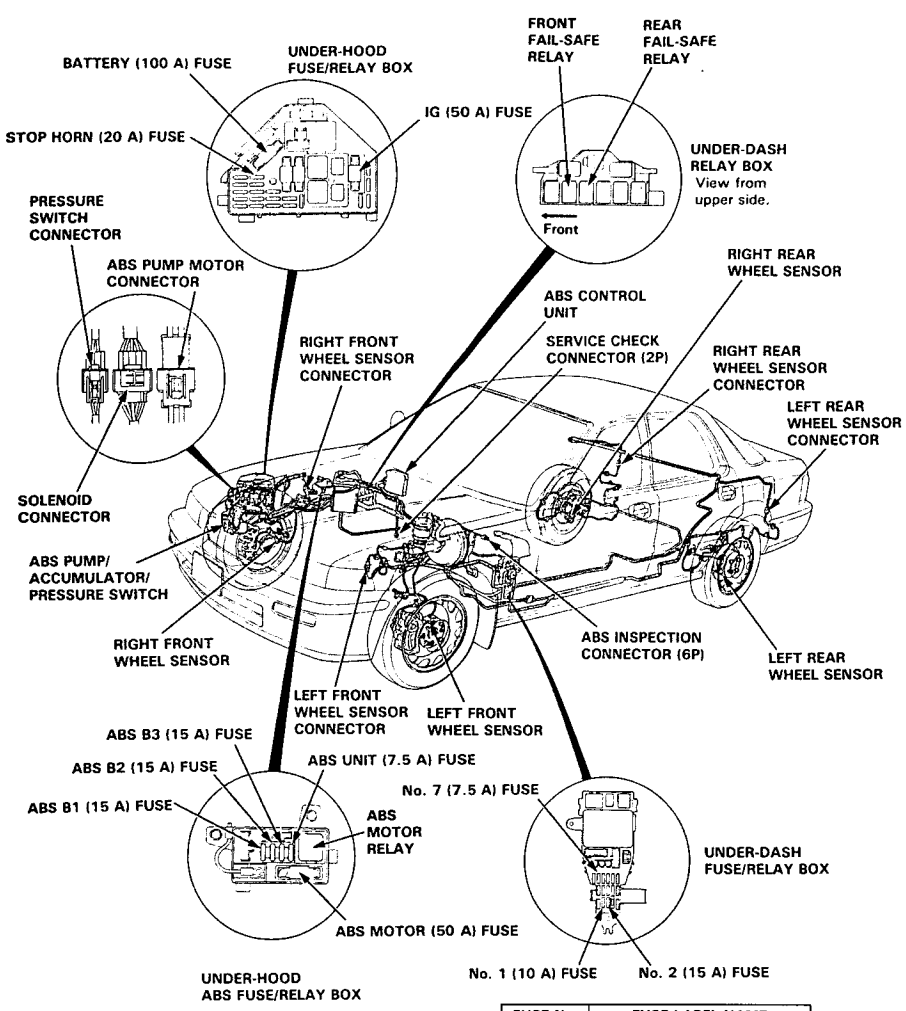

FUSE No.	FUSE LABEL NAME
No. 1	BACK-UP LIGHTS
No. 2	ECU
No. 7	HEATER CONTROL RELAY

ALB Checker

Function Test

NOTE:
- The ALB checker is designed to confirm proper operation of the anti-lock brake system (ABS) by simulating each system function and operating condition. Before using the checker, confirm that the anti-lock brake system (ABS) indicator light is not indicating some other problem with the system. The light should go on when the ignition is first turned on and then go off and stay off one second after the engine is started.
- The checker should be used through modes 1 – 5 to confirm proper operation of the system in any one of the following situations:
  - After replacing any ABS component.
  - After replacing or bleeding the system fluid (0 mode not necessary).
  - After any body or suspension repair that may have affected the sensors or their wiring.
- The procedure for modes 1 – 5 are on this page and 19-46, mode "0" (wheel sensor signal) is on page 19-47.

⚠WARNING Disconnect the ALB checker before driving the car. A collision can result from a reduction, or complete loss, of braking ability causing severe personal injury or death.

1. With the ignition switch off, disconnect the ABS inspection connector (6P) from the connector cover located on the cross-member under the passenger's seat and connect the ABS inspection connector (6P) to the ALB checker.

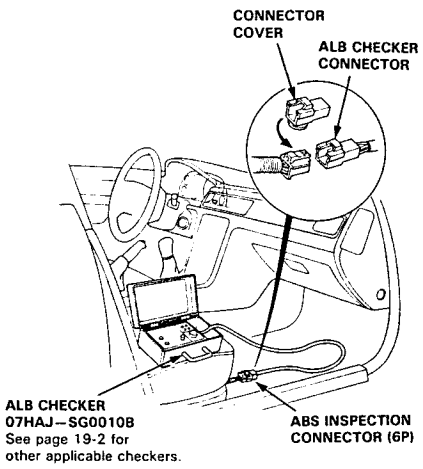

NOTE: Place the vehicle on level ground with the wheels blocked, put the transmission in neutral for manual transmission models, and in [P] position for automatic transmission models.

2. Start the engine and release the parking brake.
3. Operate the ALB checker as follows:
   (1)Turn the Mode Selector switch to "1".
   (2)Push the Start Test switch:
   - The test in progress light should come ON.
   - In one or two more seconds, all four monitor lights should come on (If not the checker is faulty).
   - The ABS indicator light should not come ON.

NOTE: When the test in progress indicator light is ON. Don't turn the Mode Selector switch.

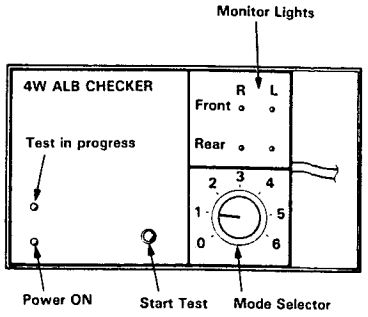

4. Turn the Mode Selector Switch to "2".

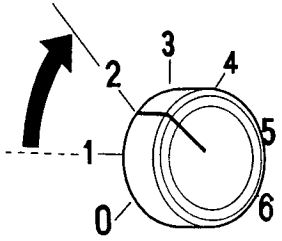

(cont'd)

ALB Checker

Function Test (cont'd)

5. Depress the brake pedal firmly and push the Start Test switch.
   The ABS indicator light should not go on while the Test in Progress light is ON. There should be kickback on the brake pedal.

   NOTE: The operation sequence simulated by Modes 2, 3, 4 and 5:

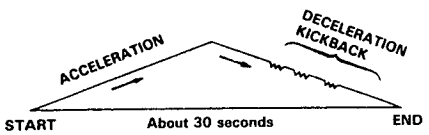

6. Turn the Mode Selector switch to "3", "4" and "5".
   Perform step 5 for each of the test mode positions.

Mode 1:
Sends the simulated driving signal 0 mph (0 km/h) → 113 mph (180 km/h) → 0 mph (0 km/h) of each wheel to the ABS control unit. There should be NO kickback.

Mode 2:
Sends the driving signal of each wheel, then sends the lock signal of the left rear wheel to the ABS control unit. There should be kickback.

Mode 3:
Sends the driving signal of each wheel, then sends the lock signal of the right rear wheel to the ABS control unit. There should be kickback.

Mode 4:
Sends the driving signal of each wheel, then sends the lock signal of the left front wheel to the ABS control unit. There should be kickback.

Mode 5:
Sends the driving signal of each wheel, then sends the lock signal of the right front wheel to the ABS control unit. There should be kickback.

Mode 6:
Not used on this model.

Inspection points:

1. The ABS indicator light comes ON.
   - Check the Diagnostic Trouble Code (DTC) and go to the troubleshooting, see page 19-49.
2. There is little or no kickback in modes 2 through 5 and the ABS indicator light does not come ON.
   - Air in the high pressure line.
   - Restricted high pressure line.
   - Faulty modulator unit.

Wheel Sensor Signal Confirmation

NOTE: Use the ALB checker (mode "0") to confirm proper wheel sensor operation.

1. Disconnect the ABS inspection connector (6P) from the connector cover located on the cross-member under the passenger's seat and connect the ABS inspection connector (6P) to the ALB checker.

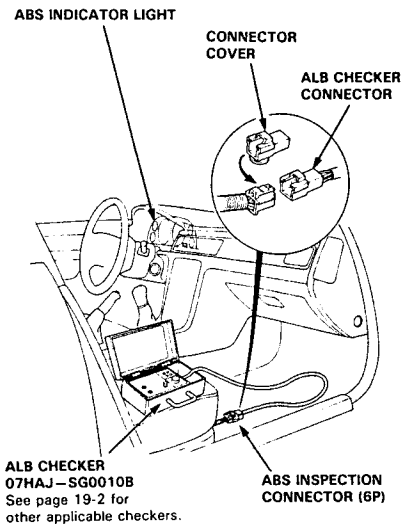

2. Raise the car so that all four wheels are off the ground and support on safety stands.
3. Turn the ignition switch ON.
4. Turn the Mode Selector switch to "0".

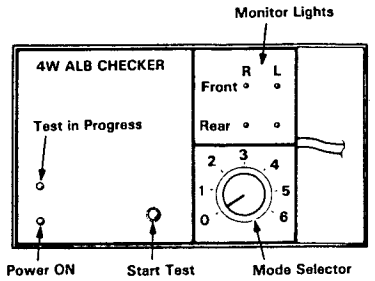

5. With the transmission in neutral, rotate each wheel briskly (one revolution per second) by hand, and confirm that its respective monitor light on the checker blinks as the wheel rotates.

   NOTE:
   - Rotating a wheel too slowly will produce only a weak blink of its monitor light that may be difficult to see.
   - In bright sunlight, the monitor light may be difficult to see. Perform tests in a shaded area.
   - In some instances, it may not be possible to spin the front wheels fast enough to get a monitor indication. If necessary, start the engine and slowly accelerate and decelerate the front wheels. the monitor lights should blink, indicating a good wheel sensor signal.

   If any monitor light fails to blink, check the suspected sensor, its air gap and its wiring/connectors.

Troubleshooting

Anti-lock Brake System (ABS) Indicator Light

Temporary Driving Conditions:

1. The ABS indicator light comes on and the ABS control unit memorizes the Diagnostic Trouble Code (DTC) under certain conditions.

   NOTE: The DTCs are explained on page 19-50.

   - The tire(s) adhesion is lost due to excessive cornering speed.
     DTCs: 5, 5-4, 5-8.
   - The vehicle loses traction when starting from a stuck condition on a muddy, snowy, or sandy road.
     DTCs: 4-1, 4-2, 4-4, 4-8.
   - When the parking brake is applied for more than 30 seconds while the vehicle is being driven.
     DTC: 2-1.
   - The vehicle is driven on an extremely rough road.

   The ABS is OK, if the ABS indicator light goes off after the engine is restarted.

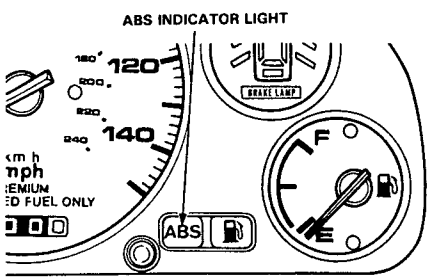

2. If you receive a customer's report that the ABS indicator light sometimes comes on, check the system using the ALB checker to confirm whether there is any trouble in the system.
   See page 19-45.

3. The ABS indicator light will come on and the ABS control unit will memorize a DTC when there is insufficient battery voltage to the ABS control unit. An example would be when the battery is so weak that the car must be jump started. After the battery is sufficiently recharged, the ABS indicator light will work normally after the engine is stopped and restarted.

   However, after recharging the battery, the DTC must be cleared from the ABS control unit's memory by disconnecting the ABS B2 (15 A) fuse in the under-hood ABS fuse/relay box for at least three seconds.

ABS Indicator Light Circuit:

CAUTION: Use only the digital multimeter to check the system.

1. The ABS indicator light does not go on when the ignition switch is turned on.

   Check the following items. If they are OK, check the ABS control unit connectors. If not loose or disconnected, substitute a known-good ABS control unit and recheck:

   - Blown ABS indicator light bulb.
   - Open circuit in YEL wire between the No. 1 BUCK-UP LIGHTS (10 A) fuse in the under-dash fuse/relay box and gauge assembly.
   - Open circuit in BLU/RED wire between gauge assembly and ABS control unit.
   - Poor ground connection between the ABS control unit to the body.

2. The ABS indicator light remains ON after the engine is started, however the ABS indicator light does not blink any DTC. Check the following items:

   - Loose or poor connection of the wire harness at the ABS control unit.
   - Faulty ABS B2 (15 A) fuse in the under-hood ABS fuse/relay box.
   - Open circuit in WHT wire between ABS B2 (15 A) fuse in the under-hood ABS fuse/relay box and ABS control unit.
   - Open circuit in BLK/YEL wire between the No. 7 HEATER CONTROL RELAY (7.5 A) fuse in the under-dash fuse/relay box and ABS control unit.
   - Short circuit in BLU/RED wire between gauge assembly and ABS control unit.
   - Open circuit in WHT/BLU wire between alternator and ABS control unit.

   If the problem is not found, substitute a known-good ABS control unit and recheck whether the ABS indicator light remains ON.

Diagnostic Trouble Codes (DTCs):

1. Disconnect the service check connector from the connector cover located under the glove box.
   Connect the two terminals of the service check connector with a jumper wire.
2. Turn the ignition switch ON, but do not start the engine.
3. Record the blinking frequency of the ABS indicator light.
   The blinking frequency indicates the Diagnostic Trouble Code (DTC).

   CAUTION: Before starting the engine, disconnect the jumper wire from the service check connector, or else the Malfunction Indicator Lamp (MIL) will stay on with the engine running.

DTC indication pattern

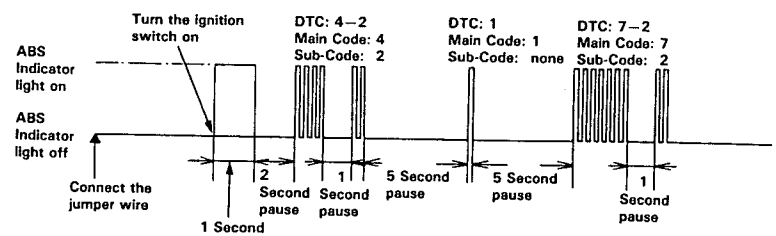

NOTE:

- The ABS control unit can indicate three DTCs (one, two or three problems).
- If the ABS indicator light does not light, see Troubleshooting of ABS Indicator Light Circuit page 19-48.
- If you miscount the blinking frequency, turn the ignition switch off then on to cycle the ABS indicator light again.
- After the repair is completed, disconnect the ABS B2 (15 A) fuse in the under-hood ABS fuse/relay box for at least three seconds to erase the ABS control unit's memory. Then turn the ignition key on again and recheck.
- The memory is erased if the connector is disconnected from the ABS control unit or the ABS control unit is removed from the body.
- After recording the main and sub-code (if applicable), refer to the Sympton-to-System Chart.

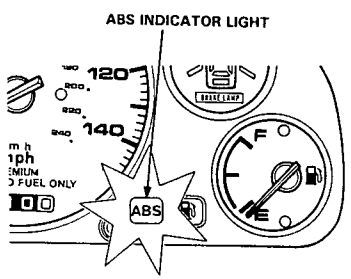

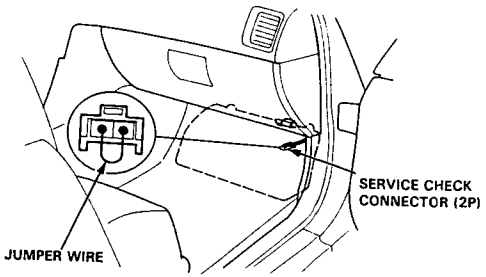

Troubleshooting

Symptom-to-System Chart

DIAGNOSTIC TROUBLE CODE (DTC)		PROBLEMATIC COMPONENT/ SYSTEM	AFFECTED				PAGE	OTHER COMPONENT	PAGE
MAIN CODE	SUB CODE		FRONT RIGHT	FRONT LEFT	REAR RIGHT	REAR LEFT			
1	–	ABS pump motor over-run	–	–	–	–	19-51	Solenoid ABS pump motor Pressure switch	
	2	ABS pump motor circuit problem	–	–	–	–	19-53	ABS motor relay ABS unit fuse ABS motor fuse	19-78
	3	High pressure leakage	–	–	–	–	19-56	Solenoid(s)	
	4	Pressure switch	–	–	–	–	19-57		
	8	Accumulator gas leakage	–	–	–	–	19-58		
2	1	Parking brake switch-related problem	–	–	–	–	19-58	Brake fluid level switch Brake system light	
3	1	Pulser(s)	○				19-81	Wheel sensor installation	
	2			○					
	4				○	○			
4	1	Wheel sensor	○				19-59		
	2			○					
	4				○				
	8					○			
5	–	Wheel sensor(s)			○	○	19-61	Modulator unit Rear brake drag	
	4				○				
	8					○			
6	–	Fail-safe relay	○		○		19-63		19-80 (Function Test)
	1		○						
	4				○				
7	1	Solenoid related problem	○				19-67	ABS B3 (15 A) fuse	
	2			○				ABS B1 (15 A) fuse Front fail-safe relay	
	4				○	○		Rear fail-safe relay	

Flowcharts

Diagnostic Trouble Code (DTC) 1: ABS Pump Motor Over-run (20 seconds)

CAUTION: Use only the digital multimeter to check the system.

Pre-test step:
- Check for flud leaks from the functional parts and replace the faulty parts if there is a leak.

Functional parts:
- Modulator unit
- ABS Pump assembly
- High pressure hose/pipe

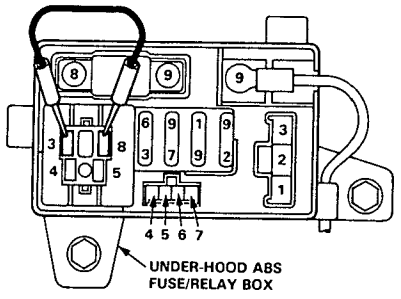

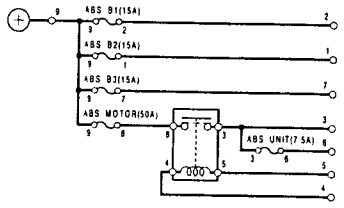

UNDER-HOOD ABS FUSE/RELAY BOX CIRCUIT DIAGRAM

- **With engine running, ABS indicator light is ON.**
- **With service check connector jumped (see page 19-49), DTC 1 is indicated.**

↓

Bleed high pressure fluid from the maintenance bleeder with the Bleeder T-wrench (see page 19-73).

↓

Remove the ABS pump motor relay.

↓

Connect the No. 3 and 8 terminals using a jumper wire for about eight seconds.

↓

Does the ABS pump motor run with an increasingly loud, raspy sound?

- NO → **Pump runs with a constant soft sound: Bleed air from anti-lock brake system using the procedure on page 19-73 and check the pump sound again.**
- YES ↓

Check the accumulator fluid quantity by bleeding the high pressure line with the Bleeder T-wrench.

↓

Is there 40 – 70 cc?

- NO → (To page 19-52)
- YES ↓

(To page 19-52)

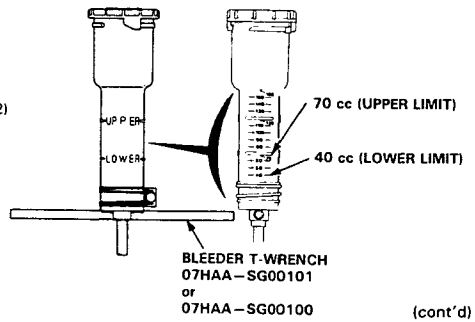

(cont'd)

Troubleshooting

Flowcharts (cont'd)

(From page 19-51)

Connect the No. 1 and No. 2 terminals using a jumper wire for about 10 seconds.

Disconnect the pressure switch 2P connector and check the continuity between the No. 1 (YEL) and No. 2 (YEL) terminals.

Is there continuity?

- NO → **Faulty pressure switch. Replace the ABS pump assembly.**
- YES → **The vehicle is OK at this time.**

(From page 19-51)

Connect the No. 3 and No. 8 terminals using a jumper wire for about 10 seconds.

Check if there is any change in the fluid level in the reservoir tank.

Is there any change?

- NO → **Faulty ABS pump motor (Relief valve is defective and open). Replace the ABS pump assembly.**
- YES → **Faulty solenoid (leakage). Replace the modulator unit.**

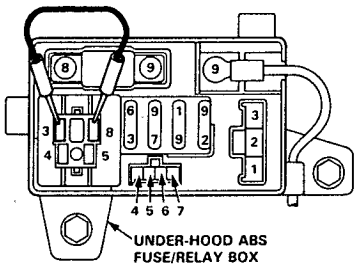

SWITCH SIDE CONNECTOR

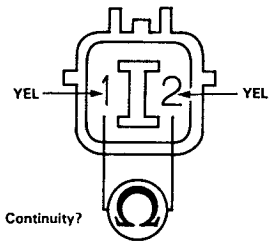

View from terminal side.

Diagnostic Trouble Code (DTC) 1-2: ABS Pump Motor Circuit Problem

CAUTION: Use only the digital multimeter to check the system.

NOTE: If a malfunction is detected, this code appears and the fail-safe function is activated. The ABS indicator light comes ON after restarting the engine until the DTC is erased (by disconnecting the ABS B2 (15 A) fuse in the under-hood ABS fuse/relay box for three seconds).

Pre-test steps:

- Check ABS MOTOR (50 A) fuse in the under-hood ABS fuse/relay box.
- Check No. 7 HEATER CONTROL RELAY (7.5 A) fuse in the under-dash fuse/relay box.
- Check ABS UNIT (7.5 A) fuse in the under-hood ABS fuse/relay box.
- Check for loose under-hood ABS fuse/relay box connectors.

– With engine running, ABS indicator light is ON.
– With service check connector jumped (see page 19-49), DTC 1-2 is indicated.

Check the ABS pump motor relay (see page 19-80).

Does it work properly?

- NO → **Replace the ABS pump motor relay.**
- YES ↓

Connect the No. 3 and No. 8 terminals using a jumper wire.

Does the ABS pump motor run?

- NO → (To page 19-55)
- YES ↓

Disconnect the jumper wire.

Remove the ABS UNIT (7.5 A) fuse in the under-hood ABS fuse/relay box.

Turn the ignition switch ON.

(To page 19-54)

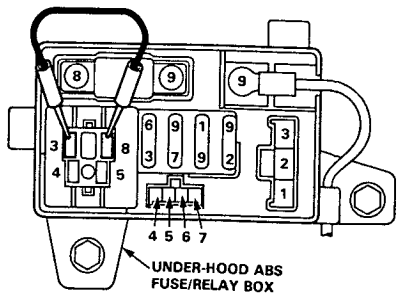

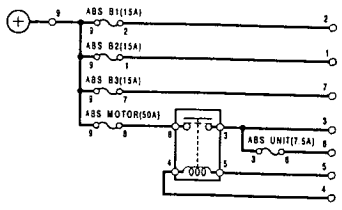

UNDER-HOOD ABS FUSE/RELAY BOX CIRCUIT DIAGRAM

(cont'd)

Troubleshooting

Flowcharts (cont'd)

(From page 19-53)

Check for voltage between the under-hood ABS fuse/relay box ABS UNIT fuse No. 6 terminal and body ground.

Is there battery voltage?

- NO → **Repair open in WHT/RED wire between the ABS UNIT (7.5 A) fuse in the under-hood ABS fuse/relay box and ABS control unit.**
- YES ↓

Reinstall the fuse to the under-hood ABS fuse/relay box.

Disconnect the 2P connector from the ABS pump motor.

Check for voltage between the ABS pump motor relay No. 3 terminal and body ground.

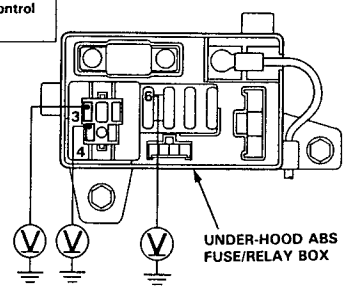

Is there battery voltage?

- NO → **Replace the under-hood ABS fuse/relay box.**
- YES ↓

Check for voltage between the No. 4 terminal and body ground.

Is there battery voltage?

- NO → **Repair open in BLK/YEL wire between the No. 7 HEATER CONTROL RELAY (7.5 A) fuse in the under-dash fuse/relay box and ABS pump motor relay.**
- YES ↓

Reinstall the ABS pump motor relay.

Disconnect the 18P connector from the ABS control unit.

Check for voltage between the ABS control unit connector No. 18 (YEL/RED) terminal and body ground.

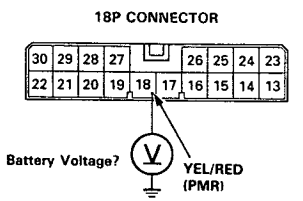

View from ABS control unit terminal side.

Is there battery voltage?

- NO → **Repair open in YEL/RED wire between the ABS pump motor relay and ABS control unit.**
- YES ↓

Check for loose ABS control unit connectors. If necessary, substitute a known-good ABS control unit and recheck.

(From page 19-53)

Check for voltage between the No. 8 terminal and body ground.

Is there battery voltage?

- NO → **Replace the under-hood ABS fuse/relay box.**
- YES ↓

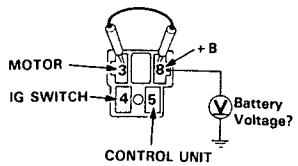

View from under-hood ABS fuse/relay box terminal side.

Disconnect the 2P connectors from the ABS pump motor.

Check for voltage between the No. 1 (WHT/BLU) terminal and body ground.

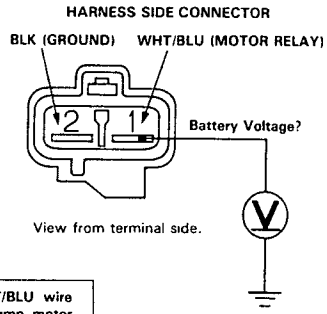

View from terminal side.

Is there battery voltage?

- NO → **Repair open in WHT/BLU wire between the ABS pump motor relay and ABS pump motor.**
- YES ↓

Check for voltage between the No. 1 (WHT/BLU) terminal and No. 2 (BLK) terminal.

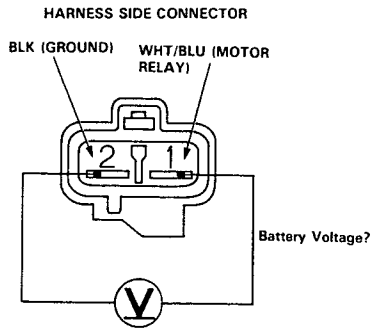

View from terminal side.

Is there battery voltage?

- NO → **Repair open in BLK wire between the ABS pump motor and ground or poor ground (G201).**
- YES ↓

Faulty ABS pump motor. Replace the ABS pump assembly.

(cont'd)

Troubleshooting

Flowcharts (cont'd)

Diagnostic Trouble Code (DTC) 1-3: High Pressure Leakage

CAUTION: Use only the digital multimeter to check the system.

Pre-test steps:
- Check reservoir fluid level, and if necessary, fill to the MAX level line.
- Check for fluid leaks from the functional parts and replace the faulty parts if there is a leak.

Functional parts:
- Modulator unit
- ABS Pump assembly
- High pressure hose/pipe

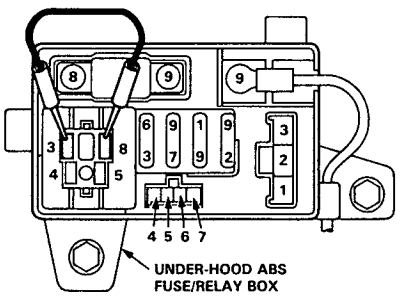

– With engine running, ABS indicator light is ON.
– With service check connector jumped (see page 19-49), DTC 1-3 is indicated.

Bleed high pressure fluid from the maintenance bleeder with the Bleeder T-wrench (see page 19-71).

Remove the ABS pump motor relay.

Connect the No. 3 and No. 8 terminals using a jumper wire for about 10 seconds.

Disconnect the 2P connector from the pressure switch.

After 30 minutes, check for continuity between the No. 1 (YEL) and No. 2 (YEL) terminals on the switch side of connector.

Is there continuity? — YES → **The vehicle is OK at this time.**

NO → **Faulty solenoid (leakage). Replace the modulator unit.**

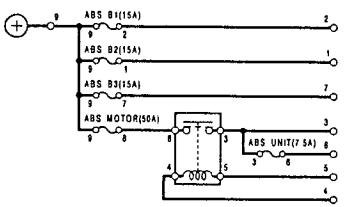

UNDER-HOOD ABS FUSE/RELAY BOX CIRCUIT DIAGRAM

SWITCH SIDE CONNECTOR

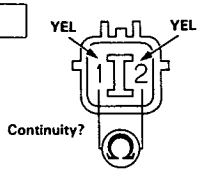

View from terminal side.

Diagnostic Trouble Code (DTC) 1-4: Pressure Switch Circuit

CAUTION: Use only the digital multimeter to check the system.

– With engine running, ABS indicator light is ON.
– With service check connector jumped (see page 19-49), DTC 1-4 is indicated.

Bleed high pressure fluid from the maintenance bleeder with the Bleeder T-wrench (see page 19-73).

Disconnect the 2P connector from the pressure switch.

Check the continuity of pressure switch between the No. 1 (YEL) and No. 2 (YEL) terminals.

Is there continuity? — YES → **Faulty the pressure switch (closed). Replace the ABS pump assembly.**

NO

Check for continuity between the No. 1 (YEL) terminal and body ground on the harness side connector.

Is there continuity? — YES → **Repair short in YEL wire between the ABS control unit and pressure switch.**

NO → **Check for loose ABS control unit connectors. If necessary, substitute a known-good ABS control unit and recheck.**

SWITCH SIDE CONNECTOR

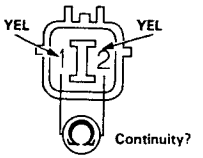

View from terminal side.

HARNESS SIDE CONNECTOR

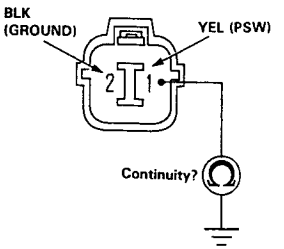

View from terminal side.

(cont'd)

Troubleshooting

Flowcharts (cont'd)

Diagnostic Trouble Code (DTC) 1-8: Accumulator Gas Leakage

Check the following items:

- The relief plug is loose.
- The relief plug O-ring is out of place.
- Bleed the high pressure line with the Bleeder T-wrench. Operate the ABS pump motor for 10 seconds and bleed the high pressure line again with the Bleeder T-wrench. If no fluid or more than 70 cc of fluid come out, replace the ABS pump assembly.

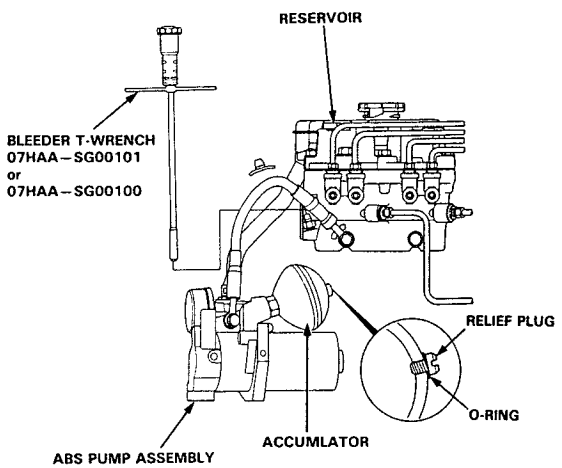

Diagnostic Trouble Code (DTC) 2-1: Parking Brake Switch Related Problem

If the parking brake has been released, the following items are possible causes. If they are OK, check the ABS control unit connectors for good connection. If not loose or disconnected, substitute a known-good ABS control unit and recheck.

NOTE: Before troubleshooting DTC 2-1, remove the ABS B2 (15 A) fuse in the under-hood ABS fuse/relay box for three seconds to clear the ABS control unit's memory, then test drive the car.
If the ABS indicator light stays off, the probability is that the car was driven with the parking brake applied.

- The parking brake is applied for more than 30 seconds while driving.
- The brake fluid level in the master cylinder is too low.
- GRN/RED wire is shorted between the brake system light and parking brake switch.
- GRN/RED wire is shorted between the brake system light and brake fluid level switch.
- The brake system light bulb is blown.
- GRN/RED has an open between the brake system light and ABS control unit.

Diagnostic Trouble Codes (DTCs) 4-1 to 4-8: Wheel Sensor(s)

CAUTION: Use only the digital multimeter to check the system.

NOTE: If a malfunction is detected, this code appears and the fail-safe function is activated. The ABS indicator light may come ON after restarting the engine until the DTC is erased (by disconnecting the ABS B2 (15 A) fuse in the under-hood ABS fuse/relay box for three seconds).

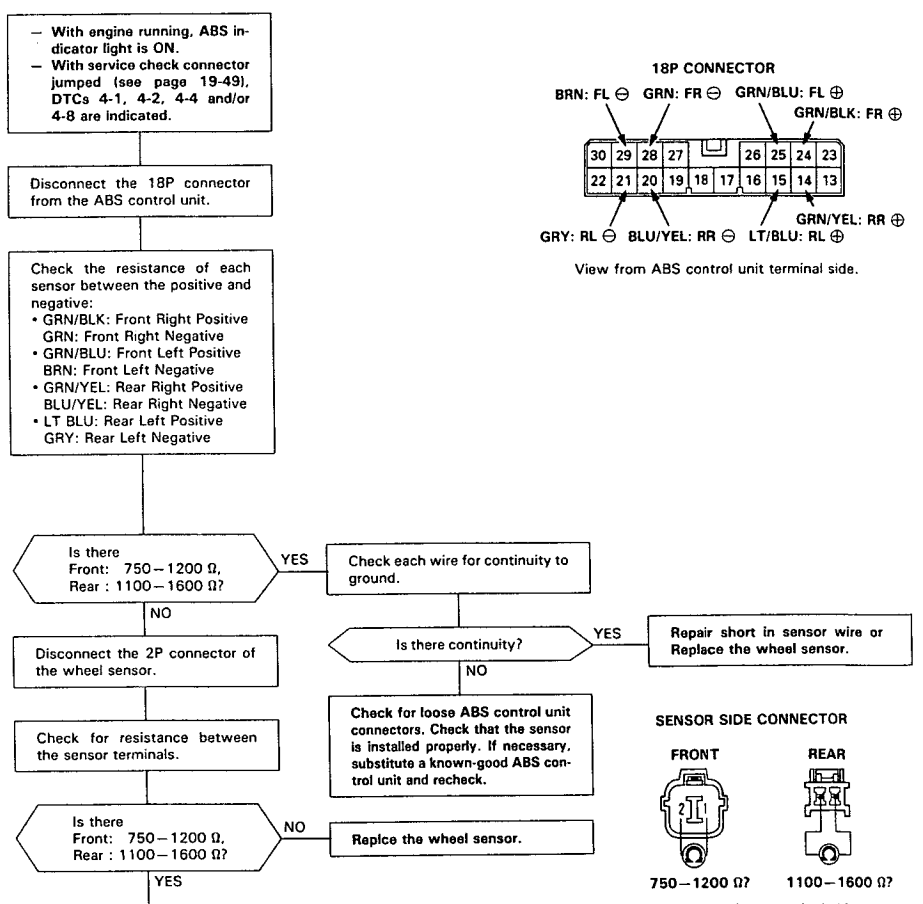

(cont'd)

Troubleshooting

Flowcharts (cont'd)

(From page 19-59)

Reconnect the 18P connector to the ABS control unit.

Check each wire for continuity between the wheel sensor harness-side terminals and body ground.

Is there continuity?

NO → Repair open in wire harness.

YES → Check for loose wheel sensor connectors. If necessary, substitute a known-good ABS control unit and recheck.

HARNESS SIDE CONNECTOR

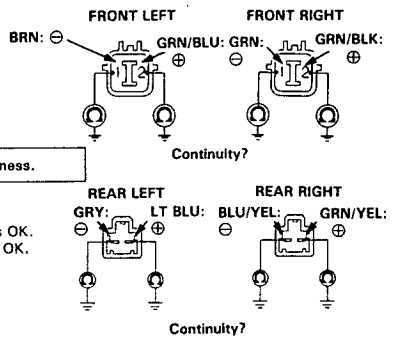

View from terminal side.

Positive: 3.3 kΩ ± 15% is OK.
Negative: Less than 1 Ω is OK.

Diagnostic Trouble Codes (DTCs) 5 to 5-8: Wheel Sensor(s)

CAUTION: Use only the digital multimeter to check the system.

NOTE: If a malfunction is detected, this code appears and the fail-safe function is activated. The ABS indicator light may come ON after restarting the engine until the DTC is erased (by disconnecting the ABS B2 (15 A) fuse in the under-hood ABS fuse/relay for three seconds.)

- **With engine running, ABS indicator light is ON.**
- **With service check connector jumped (see page 19-49), DTCs 5, 5-4 or 5-8 are indicated.**

Disconnect the 18P connector from the ABS control unit.

Check the resistance of each sensor between the positive and negative:
- GRN/YEL: Rear Right Positive
  BLU/YEL: Rear Right Negative
- LT BLU: Rear Left Positive
  GRY: Rear Left Negative

Is there 1100 – 1600 Ω?

YES → Check each wire for continuity to ground.

Is there continuity?

YES → Repair short in wire harness or Replace the wheel sensor.

NO → Reconnect the 18P connector to the ABS control unit.

Connect the ALB checker to the ABS inspection connector.

Check for ABS function in mode 2 and 3.

Does it work properly?

NO → Replace the modulator unit.

YES → Check for rear brake drag. If OK, substitute a known-good ABS control unit and recheck.

NO → Disconnect the wire harness from wheel sensor.

Check for resistance between the sensor terminals.

Is there 1100 – 1600 Ω?

NO → Replace the wheel sensor.

YES → (To page 19-62)

18P CONNECTOR

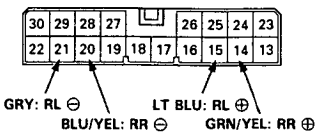

View from ABS control unit terminal side.

SENSOR SIDE CONNECTOR
REAR

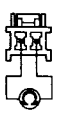

1100 – 1600 Ω
View from terminal side.

(cont'd)

Troubleshooting

Flowcharts (cont'd)

(From page 19-61)

Reconnect the 18P connector to the ABS control unit.

Check each wire for continuity between the wheel sensor harness side terminals and body ground.

Is there continuity?

NO → Repair open in wire harness.

YES → Check for loose wheel sensor connectors. If necessary, substitute a known-good ABS control unit and recheck.

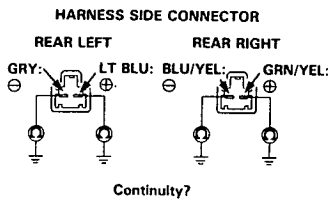

Positive: 3.3 kΩ ± 15% is OK.
Negative: Less than 1 Ω is OK.

Diagnostic Trouble Code (DTC) 6-1: Front Fail-Safe Relay Circuit

CAUTION: Use only the digital multimeter to check the system.

Pre-test steps:
- Check ABS B1 (15 A) fuse and ABS B3 (15 A) fuse in the under-hood ABS fuse/relay box.
- Check for loose under-hood ABS fuse/relay box connectors.

– With engine running, ABS indicator light is ON.
– With service check connector jumped (see page 19-49), DTC 6-1 is indicated.

Remove the front fail-safe relay.

Check relay function (page 19-80).

Does it work properly?

NO → Replace the front fail-safe relay.

YES → Turn the ignition switch ON.

Check for voltage between the front fail-safe relay No. 1 (BLK/YEL) terminal and body ground.

Is there battery voltage?

NO → Repair open in BLK/YEL wire between the No. 7 HEATER CONTROL RELAY (7.5 A) fuse in the under-dash fuse/relay box and front fail-safe relay.

YES → Turn the ignition switch OFF.

Disconnect the 10P connector from the solenoid.

Check for continuity between the front fail-safe relay No. 2 (BRN/BLK) terminal and body ground.

Is there continuity?

YES → Repair short in BRN/BLK wire between the solenoid and front fail-safe relay.

NO → Remove the rear fail-safe relay.

(To page 19-64)

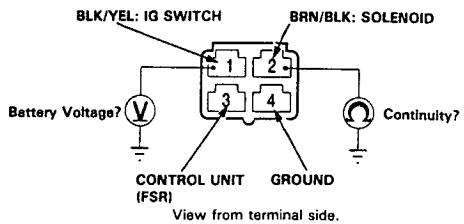

(cont'd)

Troubleshooting

Flowcharts (cont'd)

(From page 19-63)

Check each wire for continuity between the solenoid terminals and body ground
No. 4 (BRN/BLK): Front Right
No. 6 (BRN/BLU): Front Left

Is there continuity?
- YES → Faulty solenoid (short). Replace the modulator unit.
- NO ↓

Disconnect the 18P and 12P connector from the ABS control unit.

Check each wire for continuity between the ABS control unit and body ground.
No. 8 (RED/BLK): Front Right Inlet
No. 1 (YEL/BLK): Front Right Outlet
No. 10 (RED/BLU): Front Left Inlet
No. 3 (YEL/BLU): Front Left Outlet

Is there continuity?
- YES → Repair short in wire between the solenoid and ABS control unit:
  RED/BLK: Front Right Inlet
  YEL/BLK: Front Right Outlet
  RED/BLU: Front Left Inlet
  YEL/BLU: Front Left Outlet
- NO ↓

Check for continuity between the No. 17 (YEL/GRN) terminal and body ground.

Is there continuity?
- YES → Repair short in YEL/GRN wire between the ABS control unit and front fail-safe relay.
- NO ↓

Reinstall the front fail-safe relay.

Turn the ignition switch ON.

Check for voltage between the ABS control unit connector No. 17 (YEL/GRN) terminal and body ground.

Is there battery voltage?
- NO → Repair open in YEL/GRN wire between the front fail-safe relay and ABS control unit.
- YES ↓

Check for loose ABS control unit connectors. If necessary, substitute a known-good ABS control unit and recheck.

SOLENOID SIDE CONNECTOR

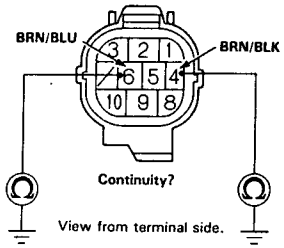

12P CONNECTOR

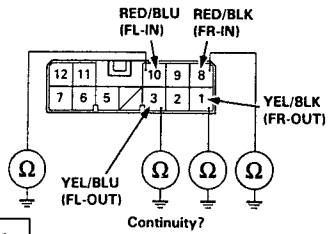

18P CONNECTOR

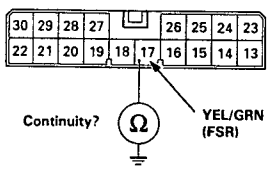

18P CONNECTOR

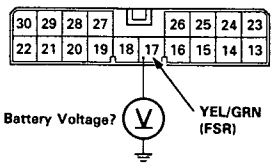

Diagnostic Trouble Code (DTC) 6-4: Rear Fail-Safe Relay Circuit

CAUTION: Use only digital multimeter to check the system.

- With engine running, ABS indicator light is ON.
- With service check connector jumped (see page 19-49), DTC 6-4 is indicated.

Remove the rear fail-safe relay.

Check relay function (page 19-80).

Does it work properly?
- NO → Replace the rear fail-safe relay.
- YES ↓

Turn the ignition switch ON.

Check for voltage between the fail-safe relay No. 1 (BLK/YEL) terminal and body ground.

Is there battery voltage?
- NO → Repair open in BLK/YEL wire between the No. 7 HEATER CONTROL RELAY (7.5 A) fuse in the under-dash fuse/relay box and front fail-safe relay.
- YES ↓

Turn the ignition switch OFF.

Disconnect the 10P connector from the solenoid.

Check for continuity between the fail-safe relay No. 2 (BLU/BLK) terminal and body ground.

Is there continuity?
- YES → Repair short in BLU/BLK wire between the solenoid and rear fail-safe relay.
- NO ↓

Remove the front fail-safe relay.

(To page 19-66)

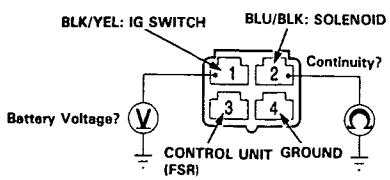

(cont'd)

Flowcharts (cont'd)

(From page 19-65)

Check for continuity between the solenoid No. 5 (BRN/WHT) terminal and body ground.

Is there continuity?
- YES → **Faulty solenoid (short). Replace the modualtor unit.**
- NO ↓

Disconnect the 18P and 12P connector from the control unit.

Check each wire for continuity between the ABS control unit and body ground.
No. 11 (RED/WHT): Rear Inlet
No. 6 (YEL/WHT): Rear Outlet

Is there continuity?
- YES → **Repair short in wire between the solenoid and ABS control unit: RED/WHT: Rear Inlet YEL/WHT: Rear Outlet**
- NO ↓

Check for continuity between the No. 17 (YEL/GRN) terminal and body ground.

Is there continuity?
- YES → **Repair short in YEL/GRN wire between the ABS control unit and rear fail-safe relay.**
- NO ↓

Reinstall the rear fail-safe relay.

Turn the ignition switch ON.

Check for voltage between the ABS control unit connector No. 17 (YEL/GRN) terminal and body ground.

Is there battery voltage?
- NO → **Repair open in YEL/GRN wire between the rear fail-safe relay and ABS control unit.**
- YES ↓

Check for loose ABS control unit connectors. If necessary, substitute a known-good ABS control unit and recheck.

SOLENOID SIDE CONNECTOR

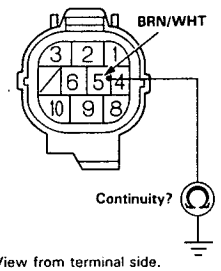

View from terminal side.

12P CONNECTOR

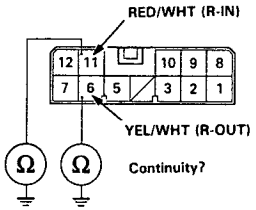

View from ABS control unit terminal side.

18P CONNECTOR

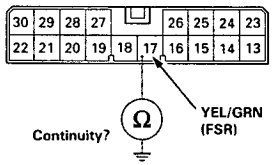

View from ABS control unit terminal side.

18P CONNECTOR

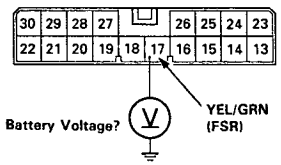

View from ABS control unit terminal side.

Diagnostic Trouble Code (DTC) 7-1 and 7-2: Front Solenoid Related Problem

CAUTION: Use only the digital multimeter to check the system.

Pre-test steps:
- Check ABS B1 (15 A) fuse in the under-hood ABS fuse/relay box.
- Check ABS B3 (15 A) fuse in the under-hood ABS fuse/relay box.
- Check for loose under-hood ABS fuse/relay box connectors.

– With engine running, ABS indicator light is ON.
– With service check connector jumped (see page 19-49), DTCs 7-1 and/or 7-2 are indicated.

Disconnect the 10P connector from the solenoids.

Check for resistance between the solenoid terminals:
No. 1 (RED/BLK) and No. 4 (BRN/BLK): Front Right Inlet
No. 3 (RED/BLU) and No. 6 (BRN/BLU): Front Left Inlet

Is there 1 – 3 Ω?
- NO → **Faulty solenoid. Replace the modulator unit.**
- YES ↓

Check for resistance between the solenoid terminals:
No. 8 (YEL/BLK) and No. 4 (BRN/BLK): Front Right Outlet
No. 10 (YEL/BLU) and No. 6 (BRN/BLU): Front Left Outlet

Is there 1 – 3 Ω?
- NO → **Faulty solenoid. Replace the modulator unit.**
- YES ↓

Disconnect the 12P connector from ABS control unit.

Check each wire for continuity between the control unit and front solenoid:
RED/BLK: Front Right Inlet
YEL/BLK: Front Right Outlet
RED/BLU: Front Left Inlet
YEL/BLU: Front Left Outlet

Is there continuity?
- NO → **Repair open in wire between the solenoid and control unit: RED/BLK: Front Right Inlet YEL/BLK: Front Right Outlet RED/BLU: Front Left Inlet YEL/BLU: Front Left Outlet**
- YES ↓ (To page 19-68)

SOLENOID SIDE CONNECTOR

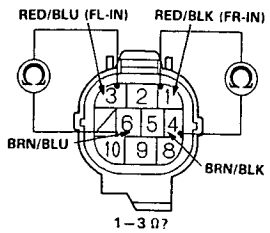

View from terminal side.

SOLENOID SIDE CONNECTOR

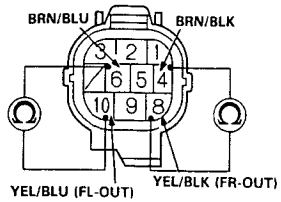

View from terminal side.

HARNESS SIDE CONNECTOR

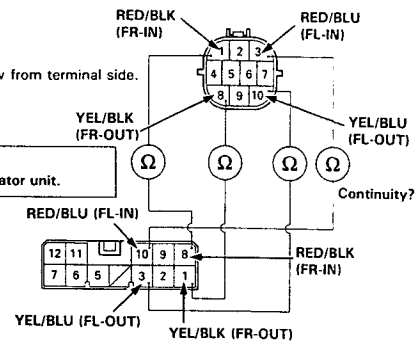

View from ABS control unit terminal side.

(cont'd)

Flowcharts (cont'd)

(From page 19-67)

Ceck each wire for continuity between the ABS control unit and body ground:
No.8 (RED/BLK): Front Right Inlet
No.1 (YEL/BLK): Front Right Outlet
No.10 (RED/BLU): Front Left Inlet
No.3 (YEL/BLU): Front Left Outlet

Is there continuity?
- YES → Repair short in wire between the solenoid and ABS control unit:
  RED/BLK: Front Right Inlet
  YEL/BLK: Front Right Outlet
  RED/BLU: Front Left Inlet
  YEL/BLU: Front Right Outlet
- NO ↓

Remove the front fail-safe relay.

Check for relay function (page 19-80).

Does it work properly?
- NO → Replace the front fail-safe relay.
- YES ↓

Check for continuity between the No.4 (BLK) terminal and body ground.

Is there continuity?
- NO → Repair open in BLK wire between the fail-safe relay and ground or poor ground (G401, G402).
- YES ↓

Check BRN/BLK wire for continuity between the solenoids and front fail-safe relay.

Is there continuity?
- NO → Repair open in BRN/BLK wire between the solenoids and front fail-safe relay.
- YES ↓

Check for loose ABS control unit connectors. If necessary, substitute a known-good ABS control unit and recheck.

12P CONNECTOR

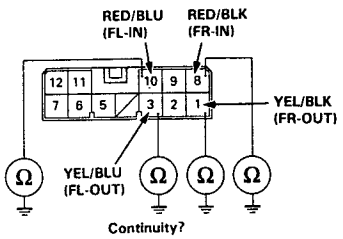

View from ABS control unit terminal side.

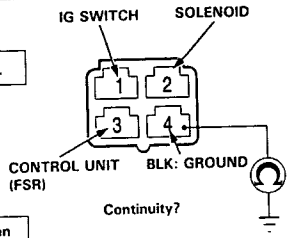

View from terminal side.

HARNESS SIDE CONNECTOR

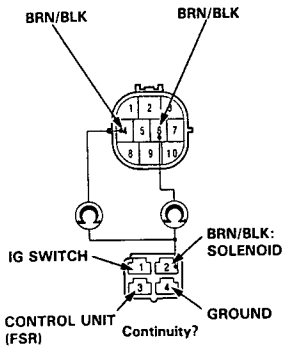

View from terminal side.

Diagnostic Trouble Code (DTC) 7-4: Rear Solenoid Problem

CAUTION: Use only the digital multimeter to check the system.

- With engine running, ABS indicator light is ON.
- With service check connector jumped (see page 19-49), DTC 7-4 is indicated.

Disconnect the 10P connector from the solenoids.

Check for resistance between the solenoid terminals:
No. 2 (RED/WHT) and No. 5 (BRN/WHT): Rear Inlet
No. 9 (YEL/WHT) and No. 5 (BRN/WHT): Rear Outlet

Is there 1 – 3 Ω?
- NO → Faulty solenoid. Replace the modulator unit.
- YES ↓

Disconnect the 12P connector from ABS control unit.

Check each wire for continuity between the ABS control unit and rear solenoid:
RED/WHT: Rear Inlet
YEL/WHT: Rear Outlet

Is there continuity?
- NO → Repair open in wire between the solenoid and ABS control unit:
  RED/WHT: Rear Inlet
  YEL/WHT: Rear Outlet
- YES ↓

Check each wire for continuity between the ABS control unit and body ground:
No. 11 (RED/WHT): Rear Inlet
No. 6 (YEL/WHT): Rear Outlet

Is there continuity?
- YES → Repair short in wire between the solenoid and ABS control unit:
  RED/WHT: Rear Inlet
  YEL/WHT: Rear Outlet
- NO ↓

(To page 19-70)

SOLENOID SIDE CONNECTOR

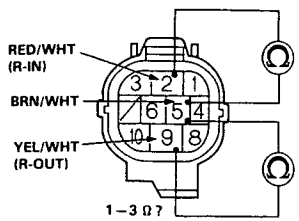

View from terminal side.

HARNESS SIDE CONNECTOR

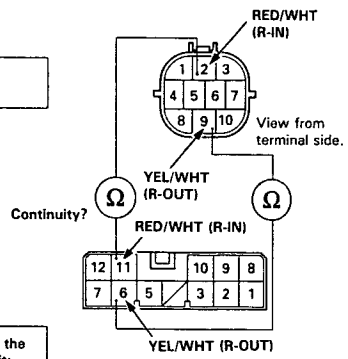

View from ABS control unit terminal side.

12P CONNECTOR

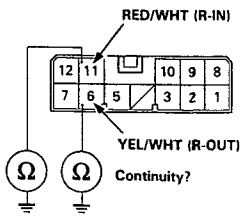

View from ABS control unit terminal side.

(cont'd)

Troubleshooting

Flowcharts (cont'd)

(From page 19-69)

Remove the rear fail-safe relay.

Check for relay function (page 19-80).

Does it work properly?

NO → **Replace the rear fail-safe realy.**

YES

Check for continuity between the No.4 (BLK) terminal and body ground.

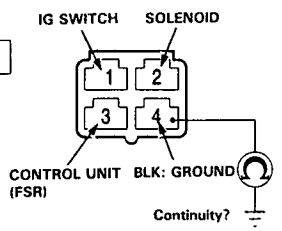

View from terminal side.

Is there continuity?

NO → **Repair open in BLK wire between the fail-safe relay and ground or poor ground (G401, G402).**

YES

Check BLU/BLK wire for continuity between the solenoid and rear fail-safe realy.

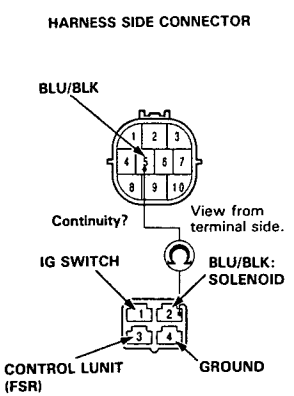

Is there continuity?

NO → **Repair open in BLU/BLK wire between the solenoid and rear fail-safe relay.**

YES

Check for loose ABS control unit connectors. If necessary, substitute a known-good ABS control unit and recheck.

Hydraulic System

Index/Hydraulic Connections

CAUTION: Do not spill brake fluid on the car; it may damage the paint; if brake fluid does contact the paint, wash it off immediately with water.

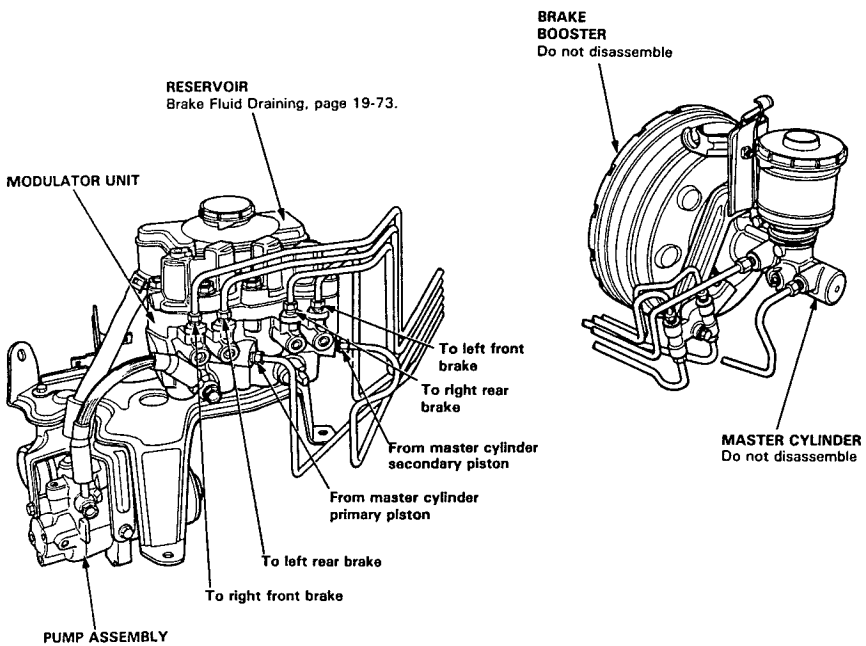

Relieving Accumulator/Line Pressure

WARNING Use the Bleeder T-wrench before disassembling the parts shaded in the illustration.

1. Open the hood.
2. Remove the red cap from the bleeder on the modulator body.
3. Install the special tool on the bleeder screw and turn it out slowly 90° to collect high-pressure fluid into the reservoir. Turn the special tool out one complete turn to drain the brake fluid thoroughly.
4. Retighten the bleeder screw and discard the fluid.
5. Reinstall the red cap.

Reservoir Brake Fluid Draining

1. Draining brake fluid from modulator tank:
   The brake fluid may be sucked out through the top of the modulator tank with a syringe. It may also be drained through the pump joint after disconnecting the pump hose.
2. Draining brake fluid from master cylinder:
   Loosen the bleed screw and pump the brake pedal to drain the brake fluid from the master cylinder.

WARNING
- **High-pressure fluid will squirt out if the shaded tube is removed or the modulator head 8 mm and 10 mm bolts are loosened.**
- **To drain high-pressure brake fluid, follow the procedure on this page.**

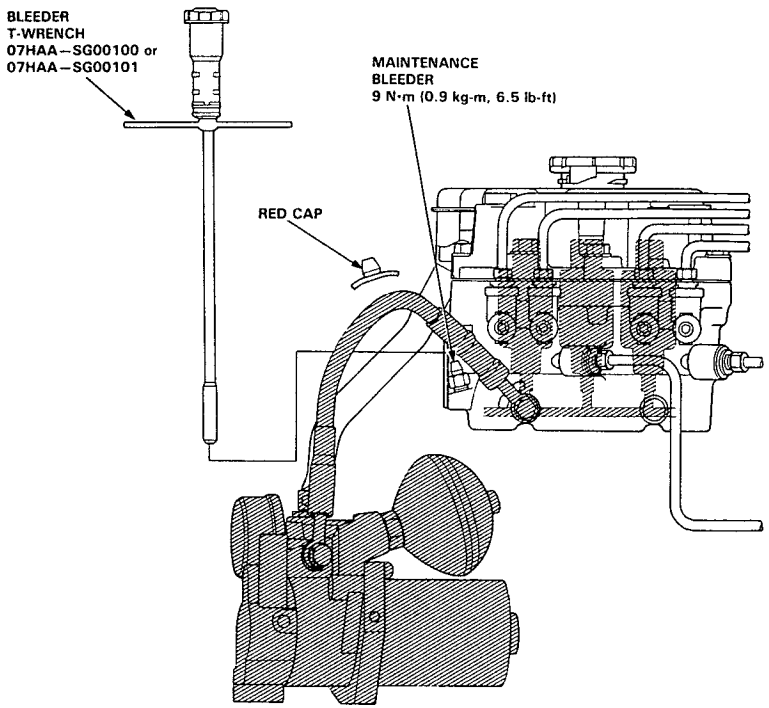

Modulator Unit

Index/Torque

WARNING Before removing the modulator-to-pump high-pressure line, be sure to relieve the fluid pressure from the maintenance bleeder (see page 19-73).

CAUTION:
- Do not spill brake fluid on the car; it may damage the paint; if brake fluid does contact the paint, wash it off immediately with water.
- To prevent spills, cover the hose joints with rags or shop towels.
- Before reassembling, check that all parts are free of dust and other foreign particles.
- Replace the modulator unit as an assembly if it is defective for any reason.
- Do not mix different brands of brake fluid as they may not be compatible.
- Do not reuse the drained fluid. Use only clean DOT 3 or 4 brake fluid.
- When connecting the brake pipes, make sure that there is no interference between the brake pipes and other parts.

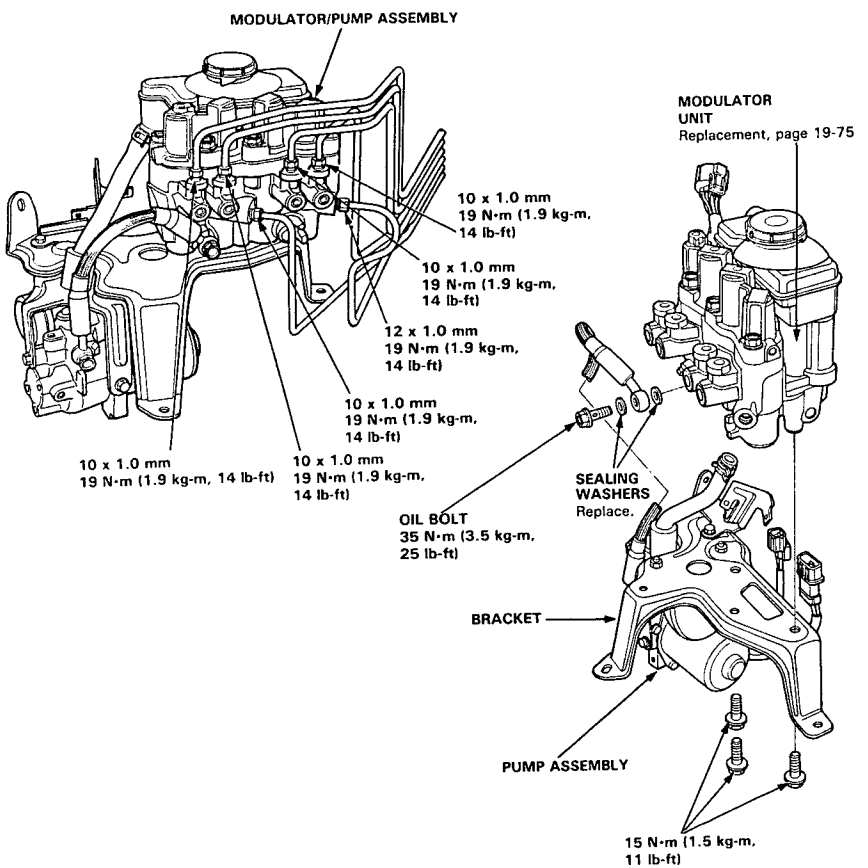

Replacement

CAUTION:
- Be careful not to bend or damage the brake pipes when removing the modulator unit.
- Do not spill brake fluid on the car; it may damage the paint; if brake fluid does contact the paint, wash it off immediately with water.

1. Drain the brake fluid from the modulator unit (see page 19-73).
2. Remove the heat shield.

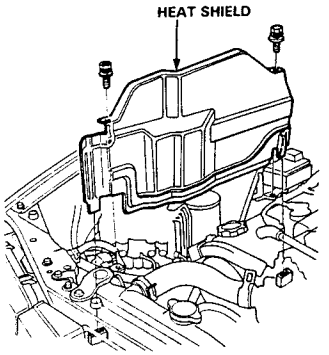

3. Remove the under-hood fuse/relay box mounting bolts and disconnect the connectors from the modulator unit.
4. Disconnect the brake pipes from the modulator unit.

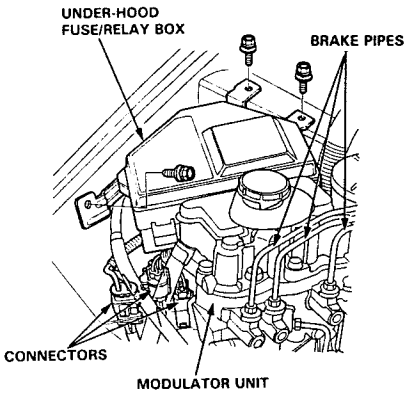

5. Remove the three modulator bracket bolts, then remove the modulator/pump assembly and bracket as an assembly.

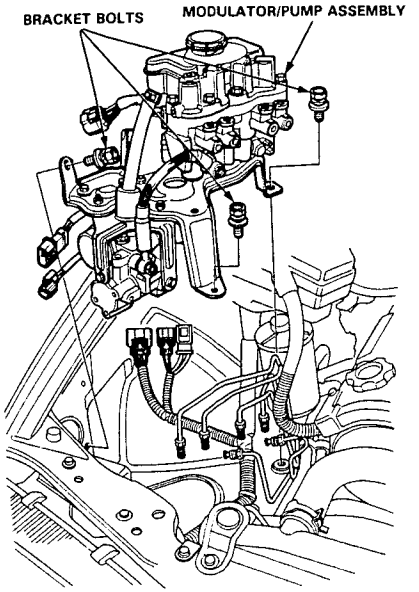

6. Install the modulator/pump assembly in the reverse order of removal.
7. Fill the modulator reservoir and bleed the modulator, accumulator/line high-pressure fluid from the maintenance bleeder with the special tool (see page 19-73).
8. Refill the modulator reservoir to the MAX level.

Modulator Unit

Solenoid Leak Test

NOTE: If a solenoid leaks excessively, the brake fluid level in the modulator reservoir will rise when operating the pump motor. The modulator reservoir may also overflow.

1. Connect an ohmmeter between the YEL and YEL terminals of the accumulator pressure switch connector.
2. Attach the positive (+) lead of a fully charged 12 V battery to the RED/WHT terminal of the pump motor connector and negative (−) lead to the GRN terminal, and install a switch between as shown.
3. Turn the switch on to allow sufficient pressure to build up within the accumulator and check for continuity. If the ohmmeter shows continuity (pressure switch turned on), run the pump motor for 10 seconds more, then turn the switch off.

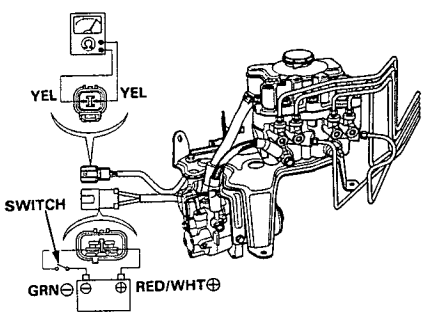

- Check if the solenoid hisses or squeaks. Replace the modulator unit if the solenoid hisses or squeaks.
- Check the pressure switch for continuity within 30 minutes. It is normal if there is continuity. If there is no continuity, a solenoid is faulty and the modulator unit must be replaced.

Pump Assembly

Index/Torque

WARNING Before removing the modulator-to-pump high-pressure line, be sure to relieve the fluid pressure from the maintenance bleeder (see page 19-73).

CAUTION:
- Be careful not to bend or damage the brake pipe when removing the pump assembly.
- Do not spill brake fluid on the car; it may damage the paint; if brake fluid does contact the paint, wash it off immediately with water.
- To prevent spills, cover the hose joints with rags or shop towels.
- Before reassembling, check that all parts are free of dust and other foreign particles.
- Do not try to disassemble the pump assembly. Replace the assembly with a new part if necessary.
- Do not mix different brands of brake fluid as they may not be compatible.
- Do not reuse the drained fluid. Use only clean DOT 3 or 4 brake fluid.
- When connecting the brake pipes, make sure that there is no interference between the brake pipes and other parts.

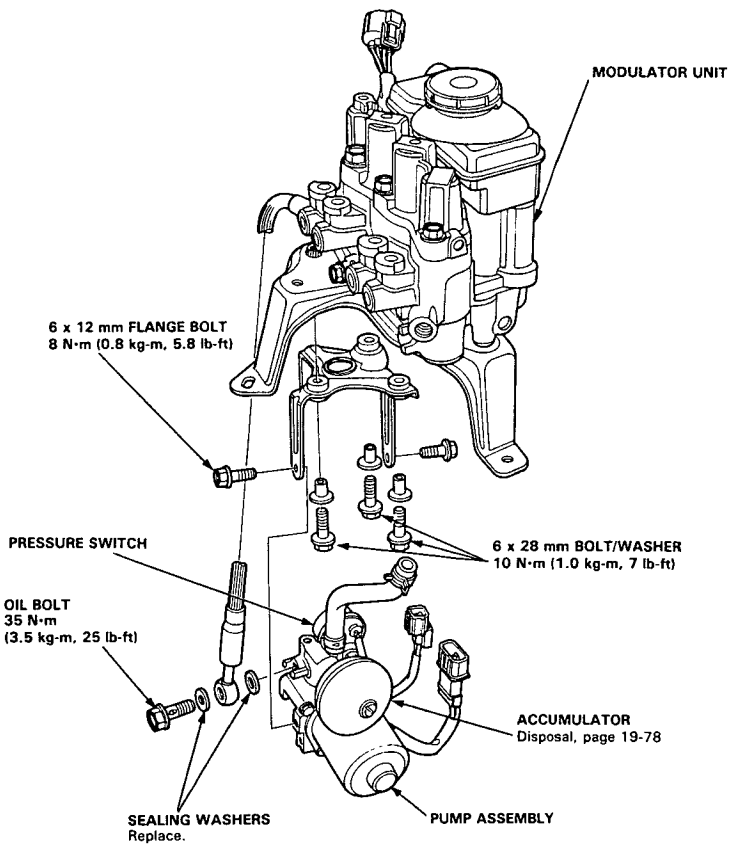

Accumulator

Disposal

⚠WARNING The accumulator contains high pressure nitrogen gas. Do not puncture, expose to the flame, or attempt to disassemble the accumulator or it may explode and severe personal injury may result.

1. Secure the pump assembly in a vise and remove the accumulator by turning it counterclockwise with a open-end wrench.

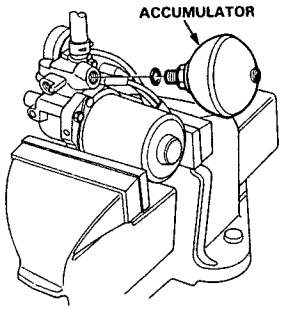

2. Secure the accumulator in a vise so that the relief plug points straight up.
3. Slowly turn the plug 3-1/2 turns and then wait three minutes for all pressure to escape.
4. Remove the plug completely and dispose of the accumulator.

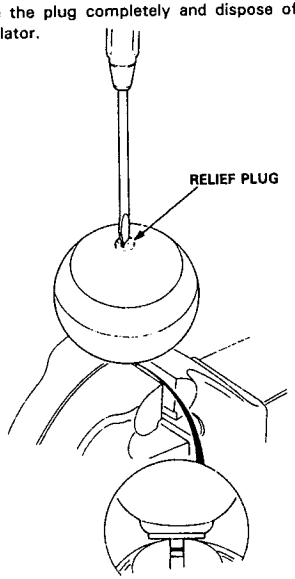

Bleeding

Air Bleeding with ALB Checker

CAUTION:
- **Do not spill brake fluid on the car; it may damage the paint; if brake fluid does contact the paint, wash it off immediately with water.**
- **Make sure no dirt or other foreign matter is allowed to contaminate the brake fluid.**
- **Do not mix different brands of brake fluid as they may not be compatible.**
- **Do not reuse the drained fluid. Use only clean DOT 3 or 4 brake fluid.**

1. Place the vehicle on level ground with the wheels blocked. Put the transmission in neutral for manual transmission models, and in [P] position for automatic transmission models. Release the parking brake.
2. Disconnect the ABS inspection connector (6P) from the cross-member under the passenger's seat and connect the ABS inspection connector (6P) to the ALB checker.

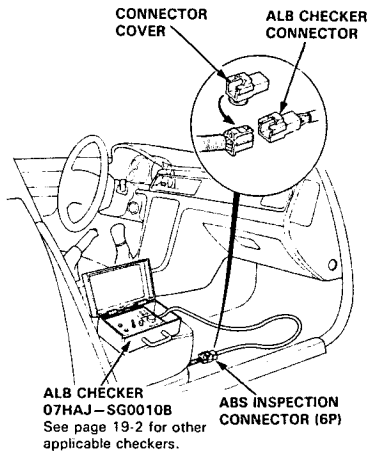

3. Fill the modulator reservoir to the MAX level line and install the reservoir cap.

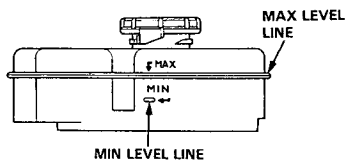

4. Start the engine and allow it to idle for a few minutes, then stop it. Check the fluid level in the modulator reservoir and refill to the MAX level line if necessary.
5. Bleed high-pressure fluid from the maintenance bleeder with the special tool.

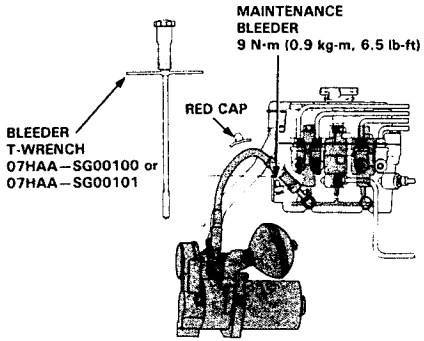

6. Start the engine and allow it to idle for a few minutes, then stop it. Check the fluid level in the modulator reservoir and refill to the MAX level line if necessary.
7. Turn the Mode Selector switch of the checker to 2.
8. While depressing the brake pedal firmly, push the Start Test switch to operate the modulator. There should be kickback on the brake pedal. If not, repeat steps 5 to 8.

   NOTE: Continue to depress the brake pedal firmly when operating the checker.
9. Turn the Mode Selector to 3, 4, and 5. Perform step 8 for each of the test mode positions.
10. Refill the modulator reservoir to the MAX level line and install the reservoir cap.

⚠WARNING Disconnect the ALB Checker before driving the car. A collision can result from a reduction or complete loss of braking ability, causing severe personal injury or death.

Electronic Components

ABS Control Unit Replacement

1. Remove the glove box.

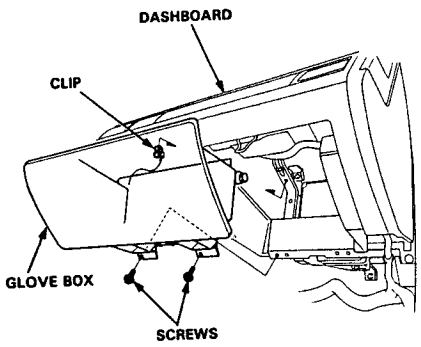

2. Remove the mounting bolts, then remove the ABS control unit.

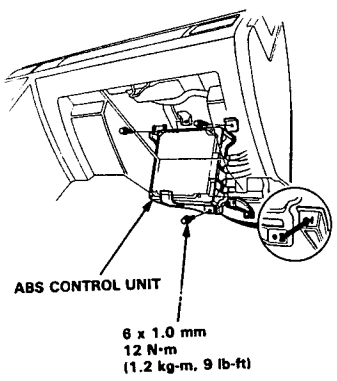

Relay Inspection

1. Remove the fail-safe relay from the under-dash fuse/relay box (Location: see page 19-44).

2. Check for continuity between the terminals A and B.
   There should be no continuity.

3. Connect a 12 V battery across the terminals C and D.
   There should be continuity between the terminals A and B.

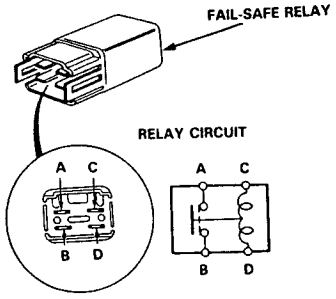

4. Remove the motor relay from the under-hood ABS fuse/relay box (Location: see page 19-44).

5. There should be continuity between the C and D terminals.

6. There should be continuity between the A and B terminals when the battery is connected to C and D terminals.
   There should be no continuity when the battery is disconnected.

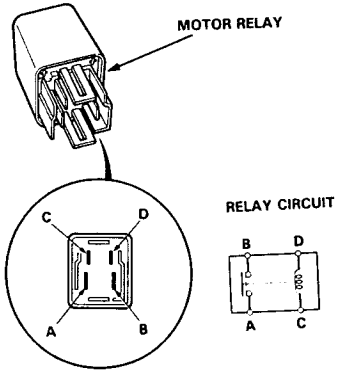

Pulsers/Wheel Sensors

Inspection

Front

1. Check the pulser for chipped or damaged teeth and replace if necessary.

2. Measure the air gap between the sensor and pulser all the way around while rotating the driveshaft by hand.

   Standard: 0.6–0.9 mm (0.02–0.04 in)

   NOTE: If the gap exceeds 0.9 mm (0.04 in) at any point, the probability is a distorted knuckle, which should be replaced.

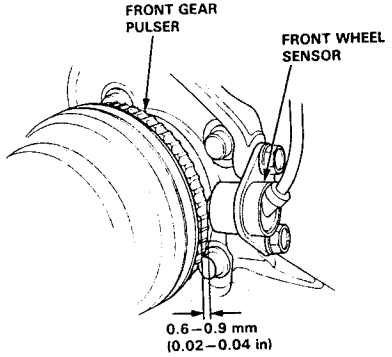

Rear

1. Remove the rear caliper assembly.

2. Remove the rear brake disc.

3. Check the rear pulser for chipped or damaged teeth and replace if necessary.

4. Measure the air gap between the sensor and pulser all the way around while rotating the hub bearing unit by hand.

   Standard: 0.5–0.9 mm (0.02–0.04 in)

   NOTE: If the gap exceeds 0.9 mm (0.04 in) at any point, the probability is a distorted knuckle, which should be replaced.

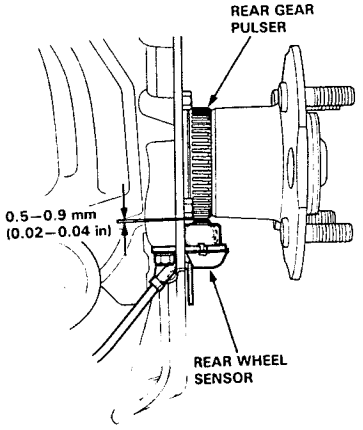

Pulsers/Wheel Sensors

Wheel Sensor Replacement

Front

NOTE:
- Be careful when installing the sensors to avoid twisting the wires.
- After sensor replacement, confirm proper operation (see page 19-47).

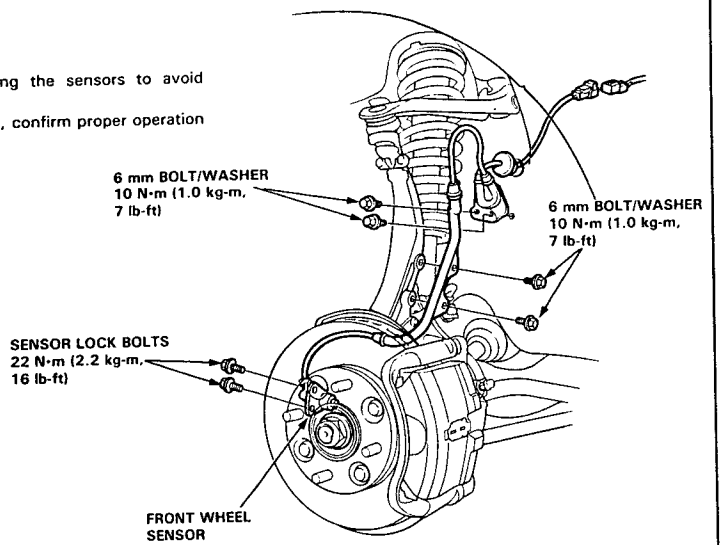

Rear

NOTE:
- Be careful when installing the sensors to avoid twisting the wires.
- After sensor replacement, confirm proper operation (see page 19-47).

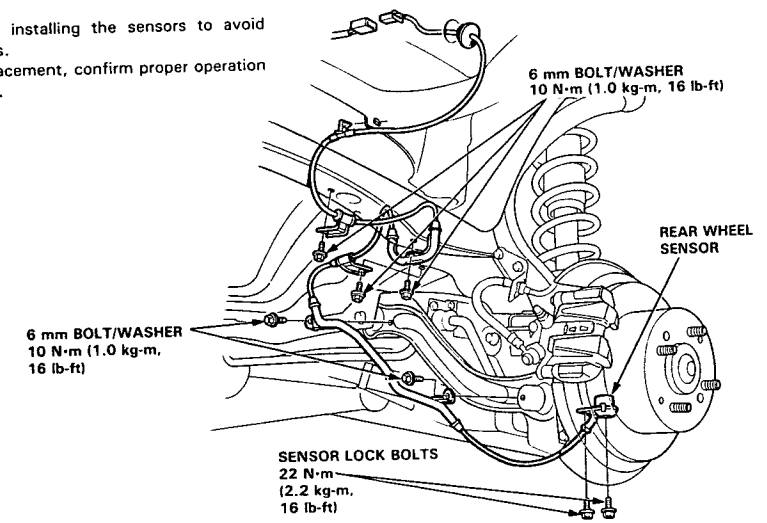

SUPPLEMENTAL RESTRAINT SYSTEM (SRS) (if body maintenance is required)

The VIGOR SRS includes a driver's side airbag, located in the steering wheel hub. In addition, the GS model has a front passenger's airbag located in the dashboard above the glove box. Information necessary to safely service the SRS is included in this Service Manual. Items marked with an asterisk (*) on the contents page include, or are located near, SRS components. Servicing, disassembling or replacing these items will require special precautions and tools, and should therefore be done by an authorized Acura dealer.

⚠WARNING

- **To avoid rendering the SRS inoperative, which could lead to personal injury or death in the event of a severe frontal collision, all maintenance must be performed by an authorized Acura dealer.**
- **Improper maintenance, including incorrect removal and installation of the SRS, could lead to personal injury caused by unintentional activation of the airbag (s).**
- **All SRS electrical wiring harnesses are covered with yellow outer insulation. Related components are located in the steering column, center console, dash, and dashboard lower panel, and in the dashboard above the glove box. Do not use electrical test equipment on these circuits.**

NOTE: The radio may have a coded theft protection circuit. Be sure to get the customer's code number before
– Disconnecting the battery.
– Removing the No. 39 (10 A) fuse in the under-hood fuse/relay box.
– Removing the radio.
After service, reconnect power to the radio and turn it on. When the word "CODE" is displayed, enter the customer's 5-digit code to restore radio operation.

Body

Bumpers
Front Bumper Replacement 20-66
Rear Bumper Replacement 20-67

*Carpet
Replacement 20-58

*Center Console
Replacement 20-59

*Center Console Panel
Replacement 20-59

*Dashboard
Component Removal/Installation 20-61
Replacement 20-63

Doors
Front Door Index 20-2
Door Panel/Plastic Cover
Replacement 20-3
Outer Handle Replacement 20-5
Latch Replacement 20-7
Glass/Regulator Replacement 20-7
Outer Molding Replacement 20-10
Weatherstrip Replacement 20-10
Rear Door Index 20-11
Door Panel/Plastic Cover
Replacement 20-12
Outer Handle Replacement 20-13
Latch Replacement 20-14
Glass/Regulator Replacement 20-15
Outer Molding Replacement 20-17
Weatherstrip Replacement 20-17
Glass Adjustment 20-18
Position Adjustment 20-26
Striker Adjustment 20-26

*Frame Repair Chart 20-78

Front and Center Pillar Retainers/Weatherstrip
Replacement 20-71

Front Grille/Side Sill Panel
Front Grille Replacement 20-72
Side Sill Panel Replacement 20-72

Headliner
Replacement 20-48

Hood/Opener and Latch
Replacement/Adjustment 20-68

Interior Trim
Replacement 20-47

Moonroof
Index 20-40
Troubleshooting 20-41
Glass Rear Edge Closing
Adjustment 20-41
Glass Height Adjustment 20-42
Deflector Adjustment 20-42
Glass and Sunshade
Replacement 20-43
Motor, Drain Tube and Frame
Replacement 20-44
Guide Rails/Cable Assembly
Replacement 20-45
Link Slider/Lift-up Link Disassembly 20-45
Opening Drag Check
(Motor Removed) 20-46
Lift-up Guide/Deflector
Replacement 20-46
Closing Force Check
(Motor Installed) 20-46

Power Door Mirror
Replacement 20-27
Mirror Holder Replacement 20-27

Rearview Mirror
Replacement 20-57

Seats
Front Seat Replacement 20-49
Front Seat Linkage Disassembly 20-50
Front Seat Cover Replacement 20-51
Rear Seat Replacement 20-53

Seat Belts
Front Seat Belt Replacement 20-54
Rear Seat Belt Replacement 20-55
Inspection 20-56
Child Seat Anchor Plate 20-57

Side and Door Moldings/Fender Well Trim
Replacement 20-73

Sub-frame 20-77

Trunk Lid
Replacement/Adjustment 20-69

Trunk Lid Latch/Fuel Lid Latch/Opener
Replacement 20-70

Windshield/Rear Window
Index 20-28
Windshield
Removal 20-29
Installation 20-30
Rear Window
Removal 20-34
Installation 20-36

Doors

Front Door Index

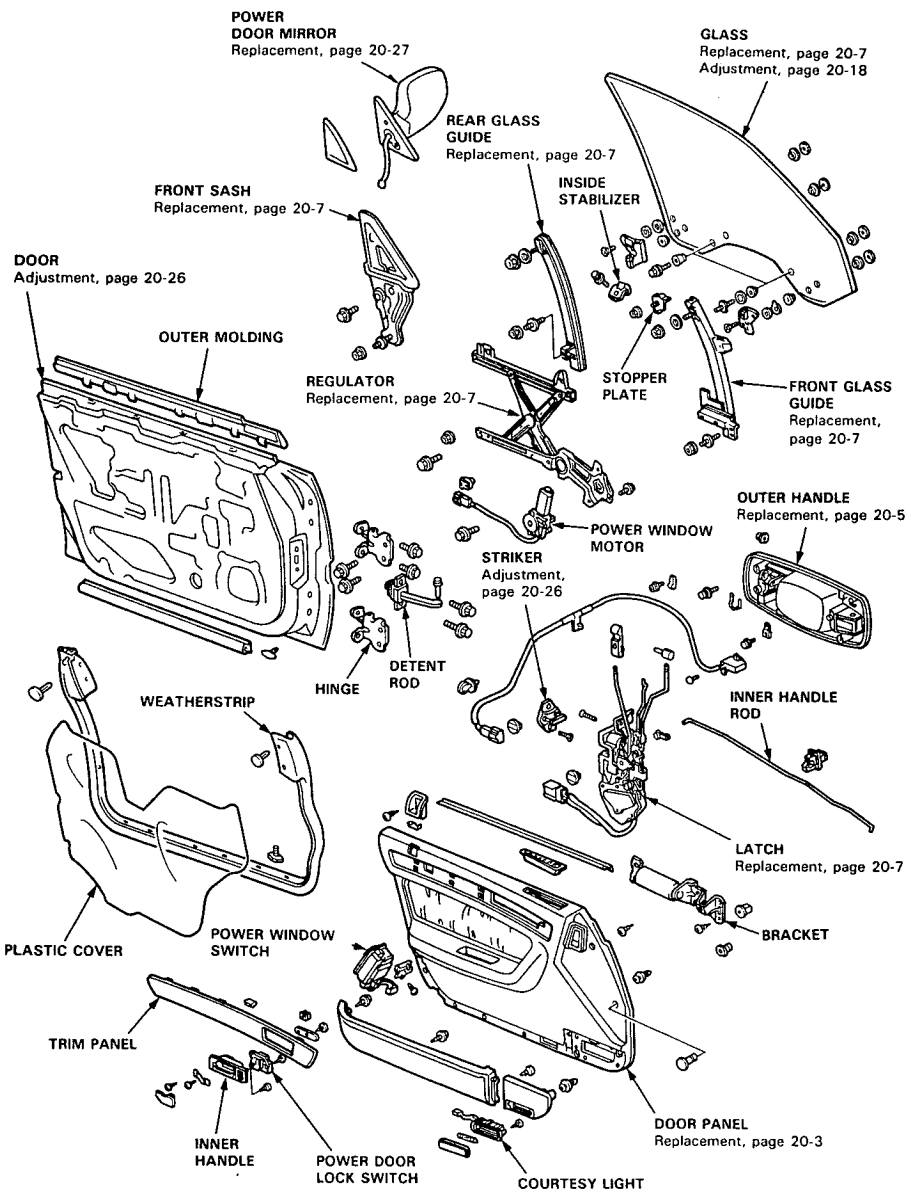

Door Panel/Plastic Cover Replacement

1. Remove the trim plate, then remove the screws.

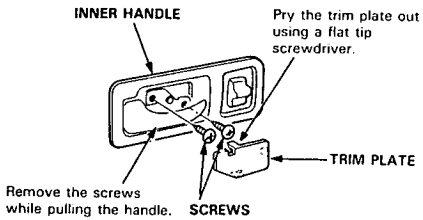

2. Carefully remove the trim panel with the inner handle and disconnect the inner handle rod and power door lock switch connector.

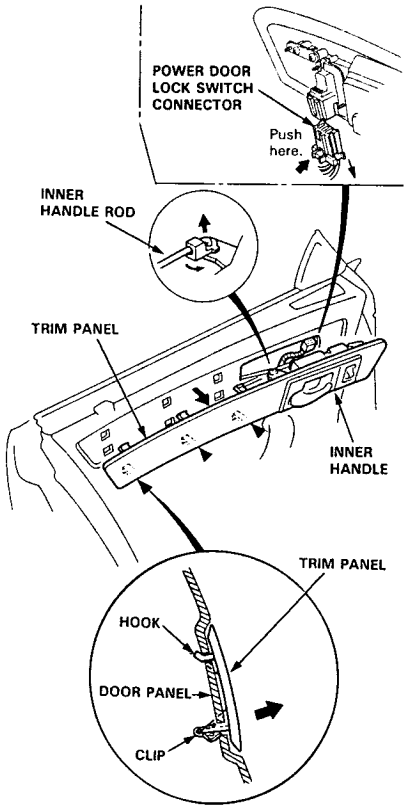

▶: Clip and hook locations, 3

NOTE: Remove the door panel with as little bending as possible to avoid creasing or breaking it.

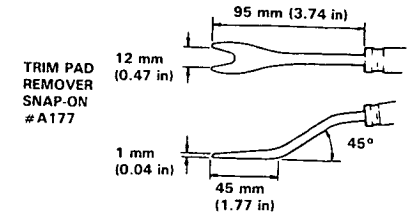

3. Remove the screws and clips (see trim pad remover) attaching the door panel.
   Remove the door panel by pulling it upward.
   Disconnect the connectors.
   - Courtesy light connector
   - Power window switch connectors
   - Security alarm connector

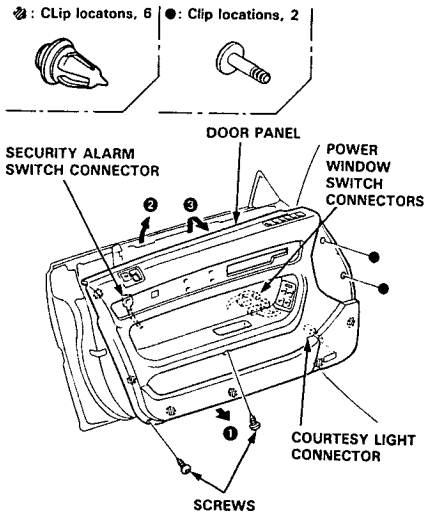

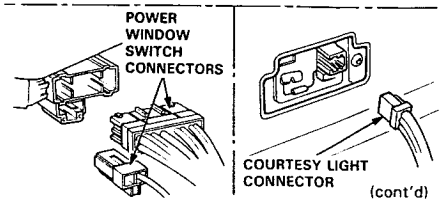

(cont'd)

Door Panel/Plastic Cover Replacement (cont'd)

4. If necessary, remove the power window switch from the door panel (see page 20-19).

5. Remove the grommets and bracket, then carefully remove the plastic cover.

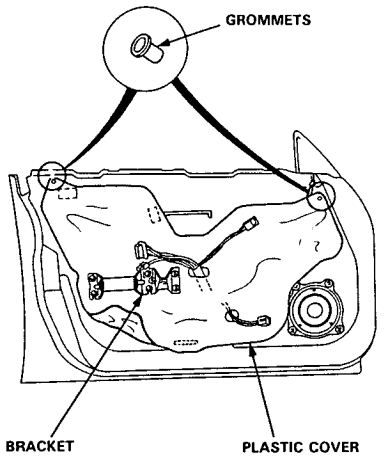

6. Installation is the reverse of the removal procedure.

NOTE:
- Make sure the door harness and connectors are fastened correctly on the door.

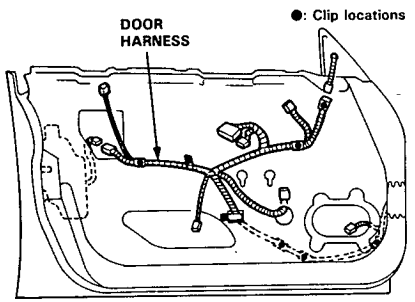

- Apply adhesive along the edge where necessary to maintain a continuous seal and prevent water leaks.

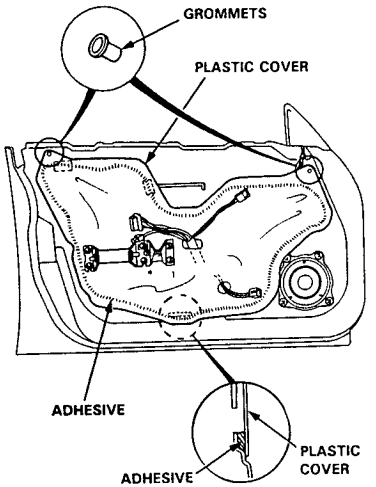

- Before fastening the door panel, make sure the door harness is not pinched.

Outer Handle Replacement

NOTE: Raise the glass fully.

1. Remove:
   - Door panel (see page 20-3)
   - Plastic cover (see page 20-4)

2. Pull out the retainer clip. Remove the lock cylinder, then disconnect the cylinder rod.

3. Pry the outer handle rod out of its joint using a flat tip screwdriver.

   CAUTION: Use protective tape around the outer handle to prevent damage.

   NOTE: To ease reassembly, note the location Ⓐ of the outer handle rod on the joint before disconnecting it.

4. Remove the outer handle mounting bolt (front).

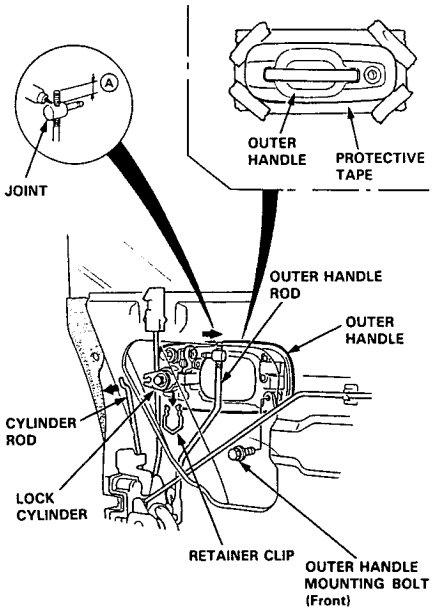

5. Lower the glass until you can see the glass mounting nuts, then loosen them.

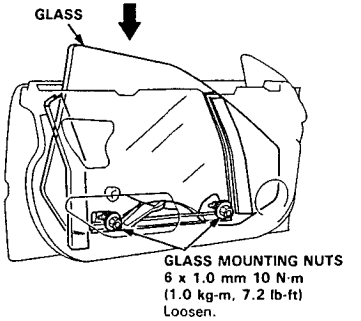

6. Loosen the front and rear glass guide mounting nuts and remove the locknuts.

NOTE:
- Hold the adjusting bolts with a hex wrench when removing the locknuts.
- Scribe a line around the mounting nuts to show the original adjustment.

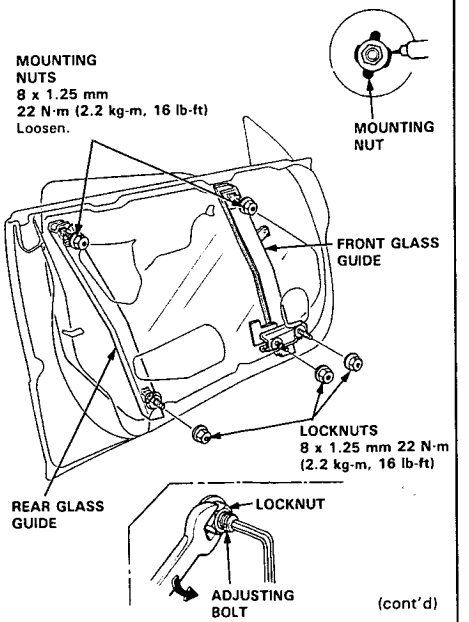

(cont'd)

Outer Handle Replacement (cont'd)

7. Slide the guide to the rear, then remove the glass from the guide while holding it.

8. Carefully slide the front glass guide toward the front of the door while holding the glass, then remove the glass slider from the front glass guide.

   NOTE: Place a shop towel inside the door to prevent damage to the glass.

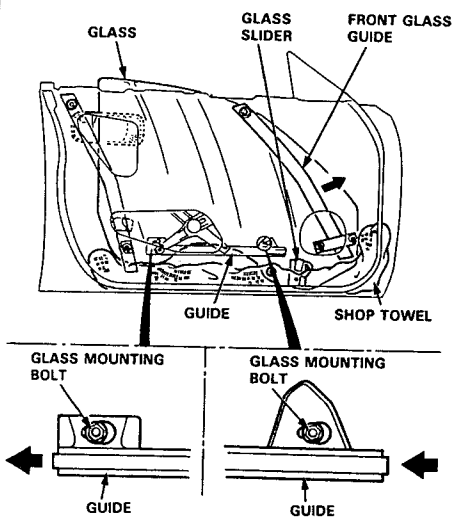

9. Carefully move the glass until you can remove the outer handle mounting bolt (rear).

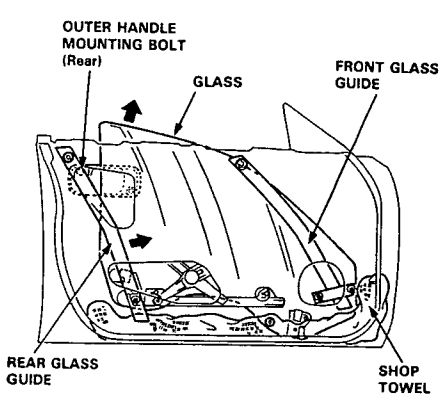

10. Remove the outer handle mounting bolt, then remove the outer handle from the outside of the door.

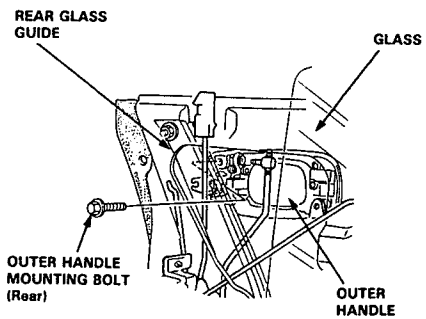

11. Installation is the reverse of the removal procedure.

    NOTE: After installing, adjust the position of the glass as necessary (see page 20-18).

Latch Replacement

NOTE: Raise the glass fully.

1. Remove:
   - Door panel (see page 20-3)
   - Plastic cover (see page 20-4)

2. Pry the outer handle rod and cylinder rod out of its joint using a flat tip screwdriver.
   Disconnect the connector from the door. Remove the screws, then remove the latch through the hole in the door.

   NOTE:
   - Take care not to bend the inner handle rod.
   - To ease reassembly, note the location Ⓐ of the outer handle rod on the joint before disconnecting it.

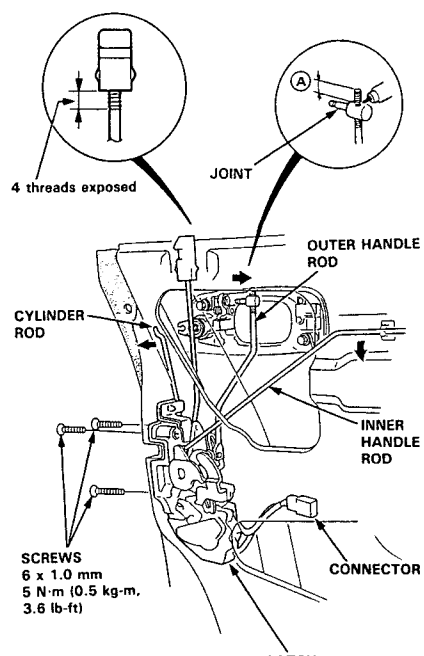

3. Installation is the reverse of the removal procedure.

Glass/Regulator Replacement

NOTE: Lower the glass fully.

1. Remove:
   - Door panel (see page 20-3)
   - Plastic cover (see page 20-4)
   - Power door mirror (see page 20-27)
   - Outer molding (see page 20-10)

2. Detach the clip, then pry the weatherstrip away from the front sash.
   Remove the screws.

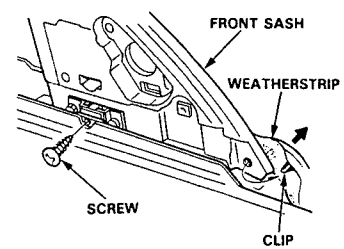

3. Remove the mounting bolts and locknut, then remove the front sash.

   NOTE:
   - Hold the adjusting bolt with a hex wrench when removing the locknut.
   - Scribe a line around the locknut to show the original adjustment.

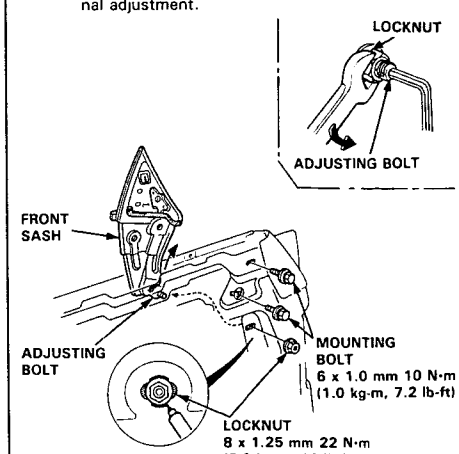

(cont'd)

Glass/Regulator Replacement (cont'd)

4. Remove the mounting nuts, then remove the stopper plates.

   NOTE: Scribe a line around the mounting nuts to show the original adjustment.

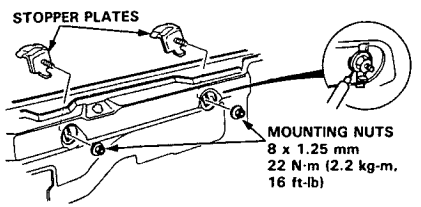

5. Remove the mounting bolt, then remove the inside stabilizer from the door.

   NOTE: Scribe a line around the mounting bolt to show the original adjustment.

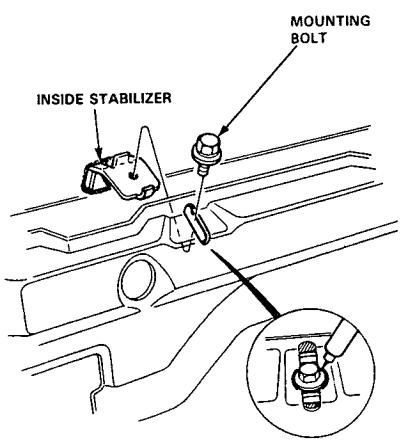

6. Carefully move the glass until you can see the glass mounting nuts, then remove them.

7. Carefully pull the glass out through the window slot.

   NOTE: Take care not to drop the glass inside the door.

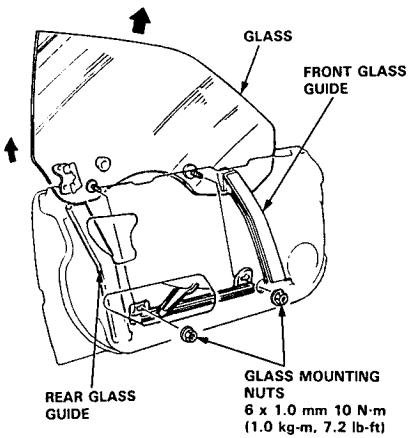

8. Remove the mounting nuts and locknuts, then remove the front and rear glass guides.

   NOTE:
   - Hold the adjusting bolts with a hex wrench when removing the locknuts.
   - Scribe a line around the mounting nuts to show the original adjustment.

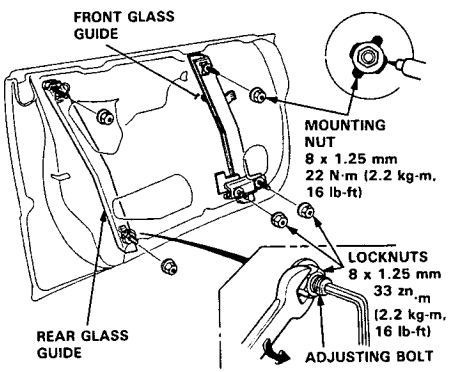

9. Remove the two mounting bolts, two roller guide bolts and loosen the two mounting bolts. Remove the regulator through the center hole in the door.

   NOTE: Scribe a line around the roller guide bolt to show the original adjustment.

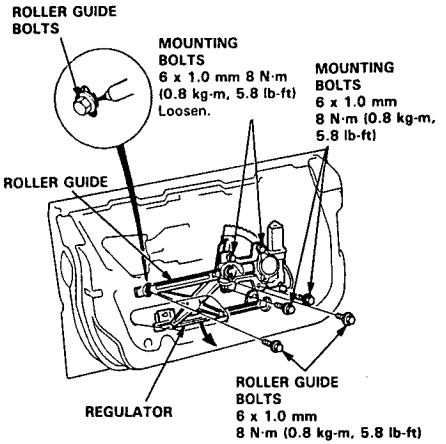

10. Grease all the sliding surfaces of the regulator and glass guides where shown.

11. Before removing the power window motor, mark the location by scribing a line across the sector gear and regulator. Install using the motor mounting bolts. Move the regulator to the original position by connecting a 12 V battery to the power window motor (see section 23).

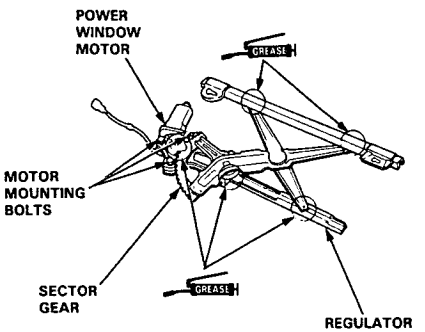

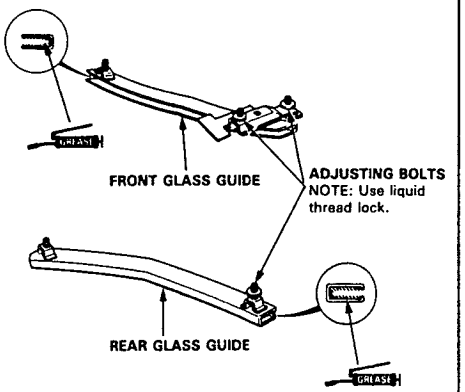

12. Installation is the reverse of the removal procedure.

13. Roll the glass up and down to see if it moves freely without binding. Also make sure that there is no clearance between the glass and weatherstrip when the glass is closed. Adjust the position of the glass as necessary (see page 20-18).

14. Attach the door harness correctly to the door (see page 20-4).

15. When reinstalling the plastic cover, apply adhesive along the edge where necessary to maintain a continuous seal and prevent water leaks (see page 20-4).

Doors

Outer Molding Replacement

NOTE: Lower the glass fully.

1. Remove:
   - Door panel (see page 20-3)
   - Plastic cover (see page 20-4)
   - Power door mirror (see page 20-27)
   - Front sash (see page 20-7)

2. Peel the weatherstrip away from the door, then remove the screw.

3. Starting at the rear, pry the outer molding up and detach the clips, then remove the outer molding.

   NOTE: Take care not to twist or scratch the outer molding.

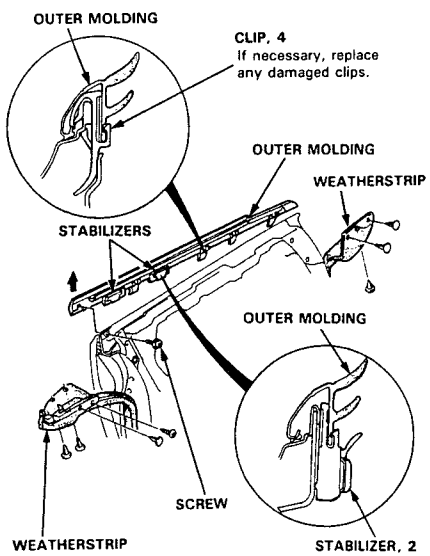

NOTE: The numbers after the part names show the quantities of the parts used.

4. Installation is the reverse of the removal procedure.

Weatherstrip Replacement

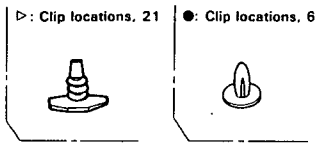

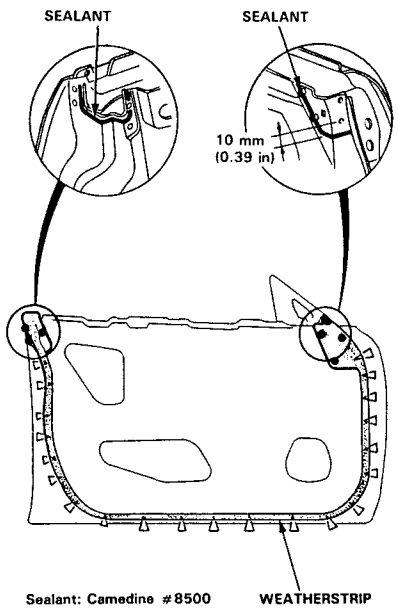

NOTE:
- Before installing the weatherstrip, apply clear sealant to the door as shown.
- If necessary, replace any damaged clips.

Rear Door Index

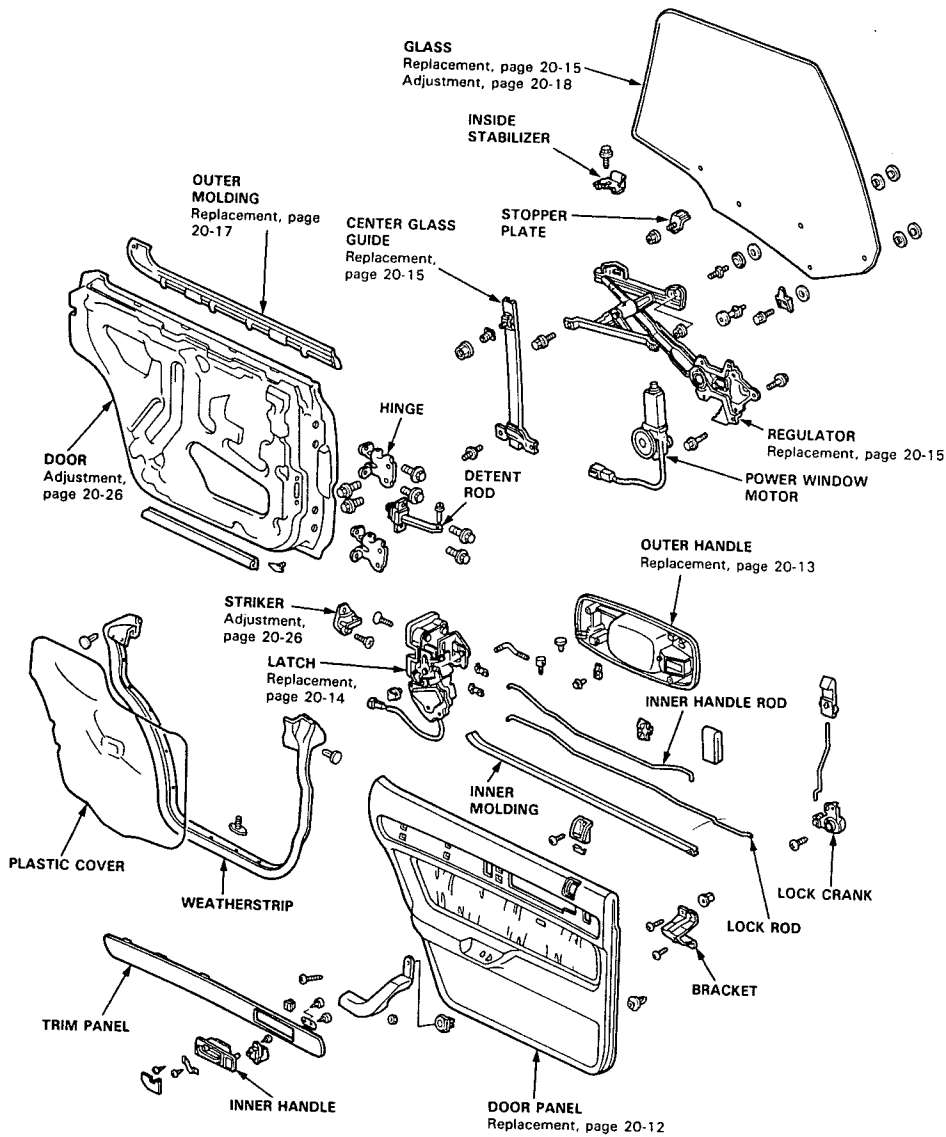

Doors

Door Panel/Plastic Cover Replacement

1. Remove the trim plate, then remove the screws.

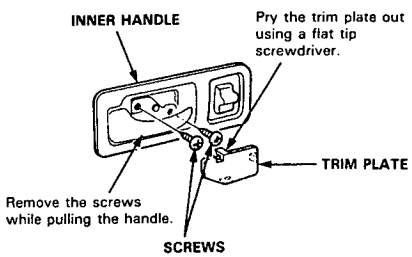

2. Carefully remove the trim panel with the inner handle and disconnect the inner handle rod and power window switch connector.

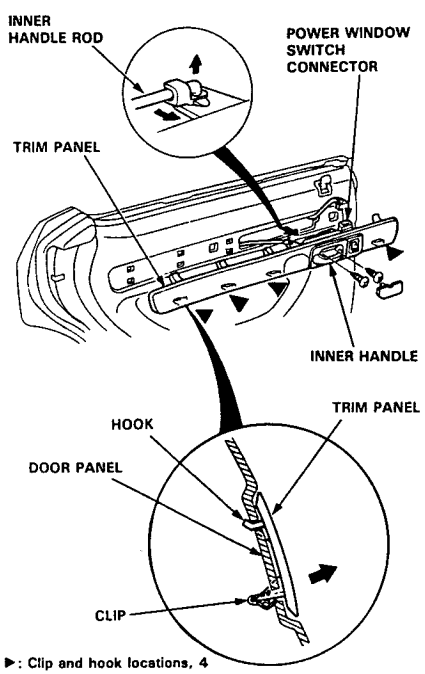

3. Remove the screws and clips (see trim pad remover page 20-3) attaching the door panel.
   Remove the door panel by pulling it upward.

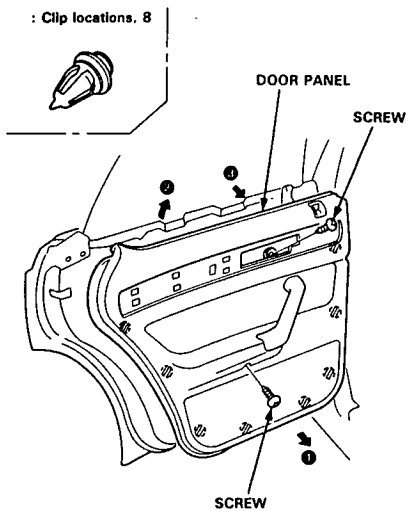

4. Remove the grommets and bracket, then carefully remove the plastic cover.

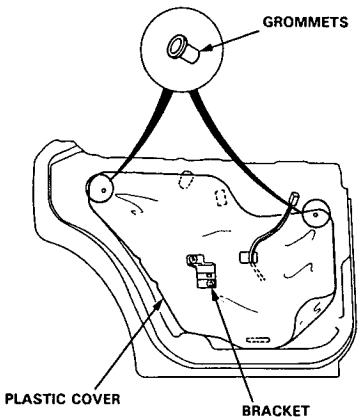

5. Installation is the reverse of the removal procedure.

NOTE:
- Make sure the door harnesses and connectors are fastened correctly on the door.

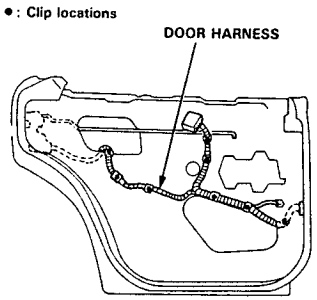

- Apply adhesive along the edge where necessary to maintain a continuous seal and prevent water leaks.

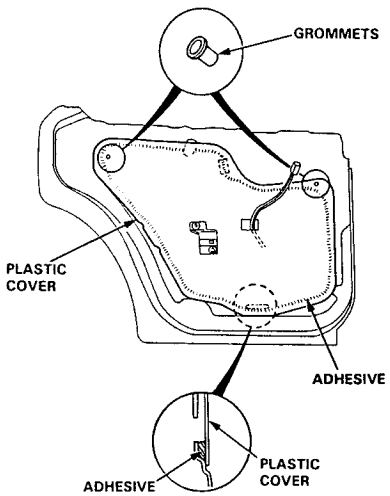

- Before fastening the door panel, make sure the door harness is not pinched.

Outer Handle Replacement

NOTE: Raise the glass fully.

1. Remove:
   - Door panel (see page 20-12)
   - Plastic cover (see page 20-12)

2. Remove the access hole seal and mounting bolts, then remove the outer handle from the outside of the door.
   Pry the outer handle rod out of its joint using a flat tip screwdriver.

   CAUTION: Use protective tape around the outer handle to prevent damage.

   NOTE: To ease reassembly, note the location Ⓐ of the outer handle rod on the joint before disconnecting it.

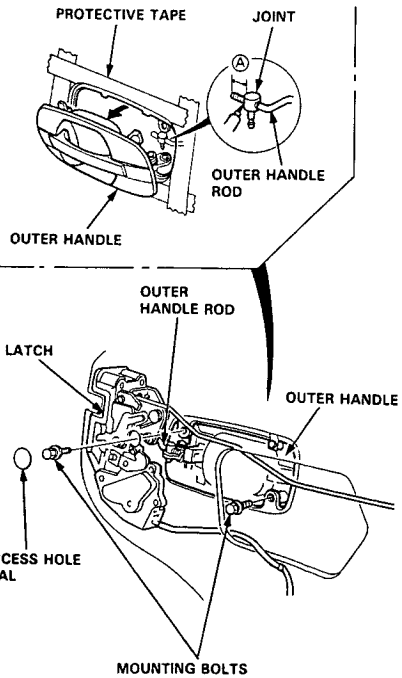

3. Installation is the reverse of the removal procedure.

Latch Replacement

NOTE: Raise the glass fully.

1. Remove:
   - Door panel (see page 20-12)
   - Plastic cover (see page 20-12)
2. Disconnect the lock rod from the latch side. Remove the screw and detach the lock rod, then remove the lock crank.

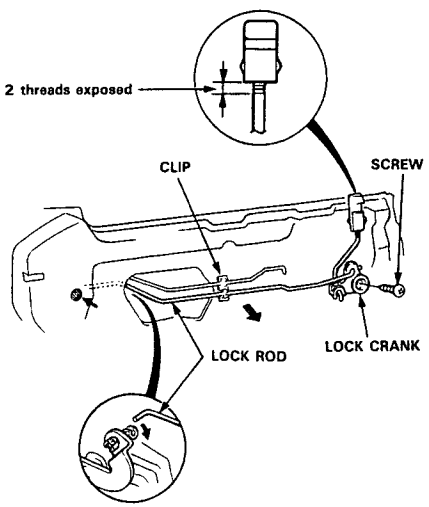

3. Pry the outer handle rod out of its joint using a flat tip screwdriver. Disconnect the connector.
4. Remove the screws, then remove the latch through the hole in the door.

   NOTE: Take care not to bend the inner handle rod.

   NOTE: To ease reassembly, note the location Ⓐ of the outer handle rod on the joint before disconnecting it.

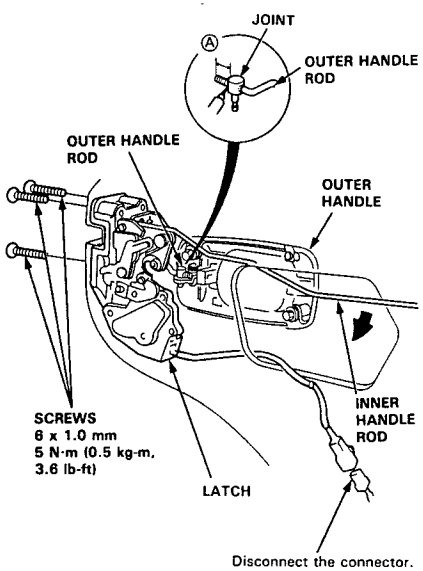

5. Installation is the reverse of the removal procedure.

Glass/Regulator Replacement

NOTE: Lower the glass fully.

1. Remove:
   - Door panel (see page 20-12)
   - Plastic cover (see page 20-12)
   - Outer molding (see page 20-17)
2. Remove the mounting nuts, then remove the stopper plates.

   NOTE: Scribe a line around the mounting nuts to show the original adjustment.

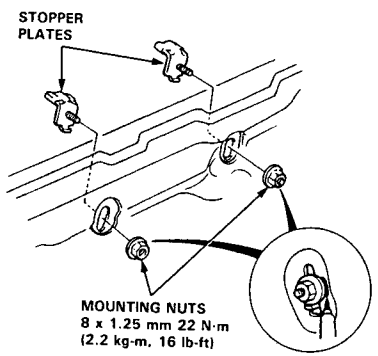

3. Remove the mounting bolts, then remove the inside stabilizers from the door.

   NOTE: Scribe a line around the mounting nuts to show the original adjustment.

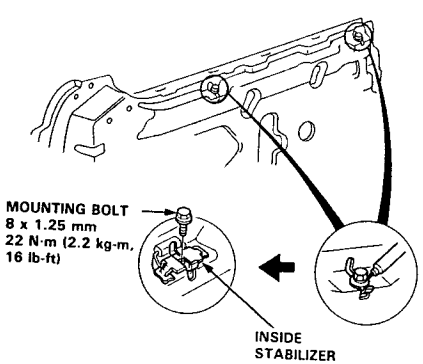

4. Carefully move the glass until you can see the glass mounting nuts, then remove them.

   NOTE: Take care not to drop the glass inside the door.

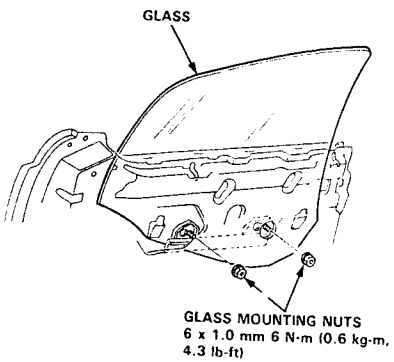

5. Carefully pull the glass out through the window slot.

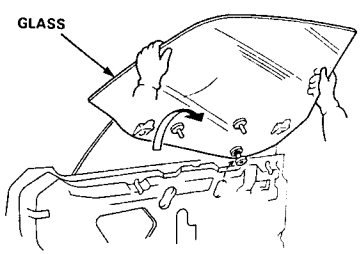

(cont'd)

Glass/Regulator Replacement (cont'd)

6. Remove the locknuts, then remove the center glass guide.

   NOTE:
   - Hold the adjusting bolts with a hex wrench when removing the locknuts.
   - Scribe a line around the locknuts to show the original adjustment.

7. Disconnect the connector. Remove the two mounting bolts, two roller guide bolts and loosen the two mounting bolts. Remove the regulator through the center hole in the door.

   NOTE: Scribe a line around the roller guide bolts to show the original adjustment.

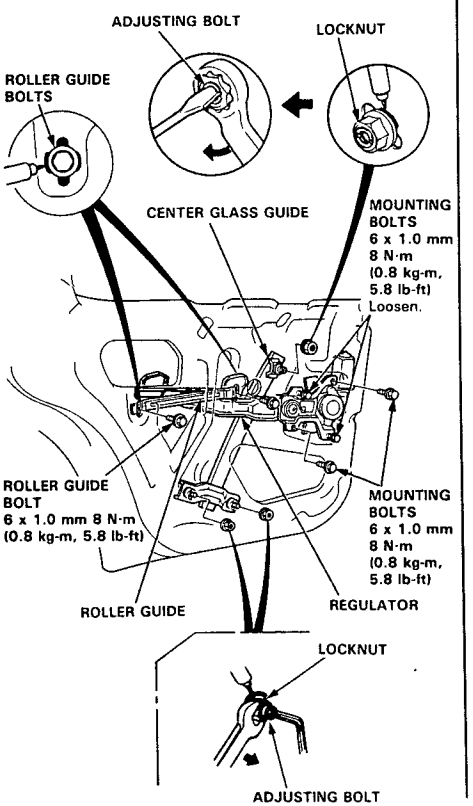

8. Grease the sliding surfaces of the regulator and center glass guide where shown.

9. Before removing the power window motor, mark the location by scribing a line across the sector gear and regulator. Install using the motor mounting bolts. Move the regulator to the original position by connecting a 12 V battery to the power window motor (see section 23).

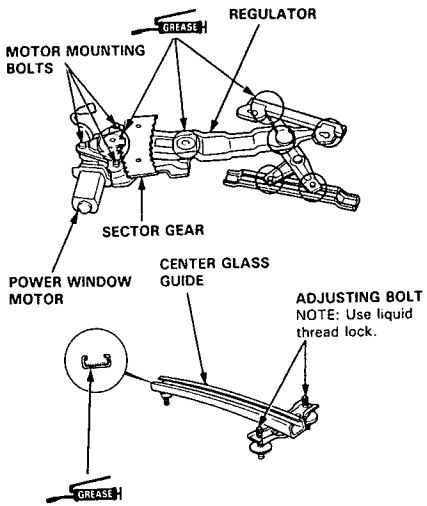

10. Installation is the reverse of the removal procedure.

11. Roll the glass up and down to see if it moves freely without binding. Also make sure that there is no clearance between the glass and weatherstrip when the glass is closed. Adjust the position of the door glass as necessary (see page 20-18).

12. Reinstall the door harness correctly to the door (see page 20-13).

13. When reinstalling the plastic cover, apply adhesive along the edge where necessary to maintain a continuous seal and prevent water leaks (see page 20-13).

Outer Molding Replacement

NOTE: Lower the glass fully.

1. Remove:
   - Door panel (see page 20-12)
   - Plastic cover (see page 20-12)

2. Peel the weatherstrip away from the door, then remove the screws.

3. Starting at the rear pry the outer molding up and detach the clips, then remove the outer molding.

   NOTE: Take care not to twist or scratch the outer molding.

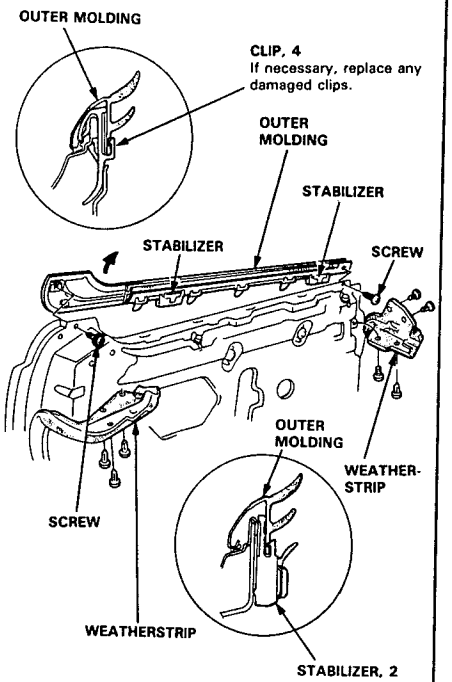

NOTE: The numbers after the part names show the quantities of the parts used.

4. Installation is the reverse of the removal procedure.

Weatherstrip Replacement

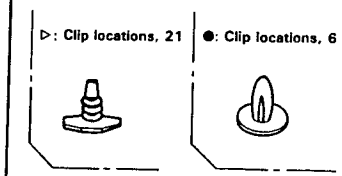

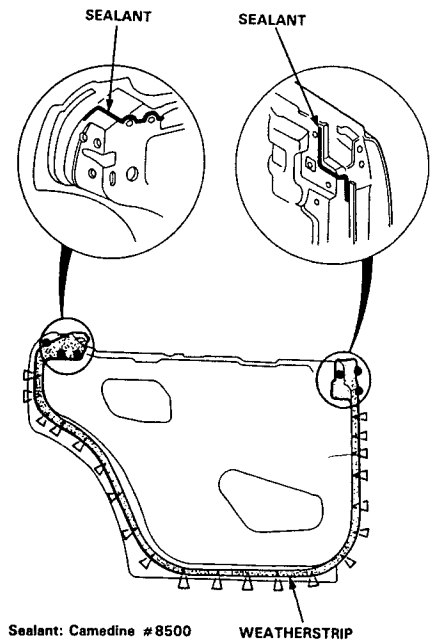

NOTE:
- Before installing the weatherstrip, apply clear sealant to the door as shown.
- If necessary, replace any damaged clips.

Glass Adjustment

*: Adjusting bolt locations

Front:

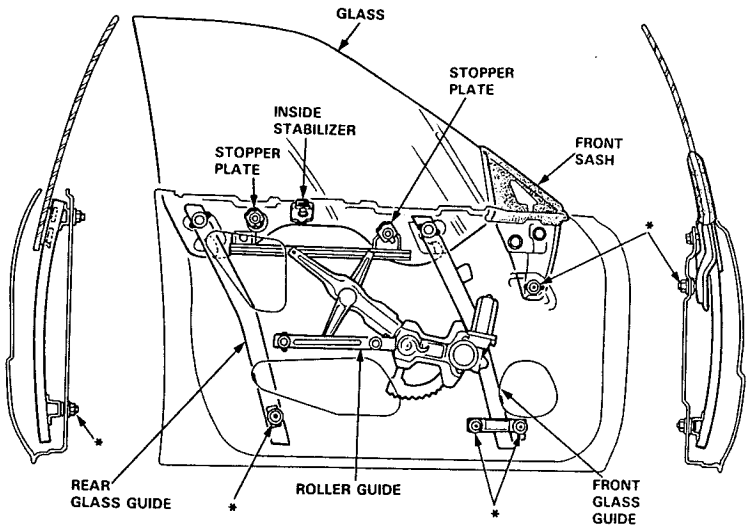

Rear:

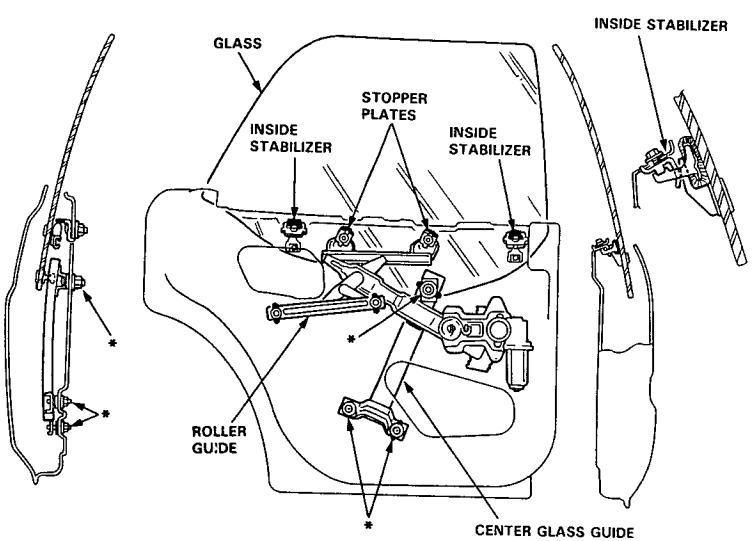

NOTE: Place the vehicle on a firm, level surface when adjusting the glass.

1. Remove the door trim (see page 20-47).
2. Remove the weatherstrip (see page 20-71).

   NOTE:
   - Pry the weatherstrip up at the center pillar, remove the six screws, then remove the weatherstrip with the center pillar retainer.
   - Check the weatherstrip for damage or deterioration and replace if necessary.

3. Remove all retainers by removing the screws.

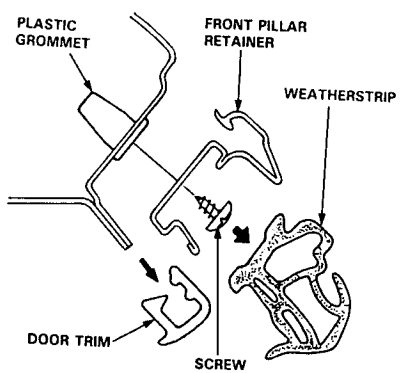

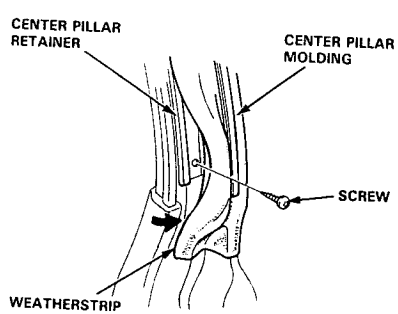

4. Remove the door panel and peel off the plastic cover (see pages 20-3, 4, 12).
5. Remove the power door mirror (see page 20-27).
6. Remove the power window switch from the door panel.

Front:

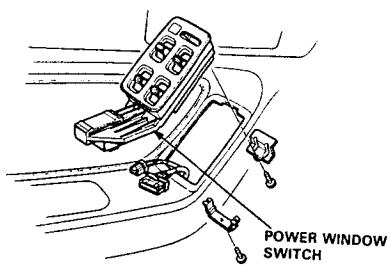

Rear:

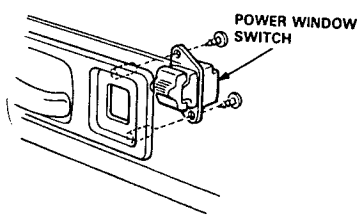

7. Connect the power window switch to the door harness connectors.

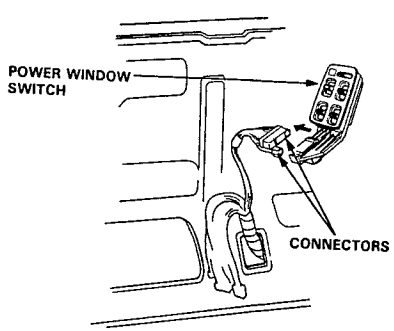

8. Carefully close the door while holding the glass to prevent it from contacting the body.
9. Raise the glass fully.

   NOTE: Check the door fit to the body opening.

(cont'd)

Glass Adjustment (cont'd)

10. Measure and record the clearance "H" and "B" between the glass and body at the locations shown.

11. Adjust the clearance as described in the steps. (12) thru (15).

Measuring Points

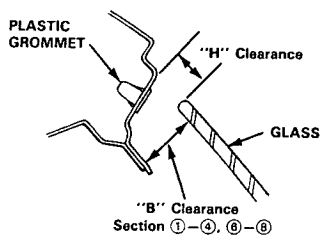

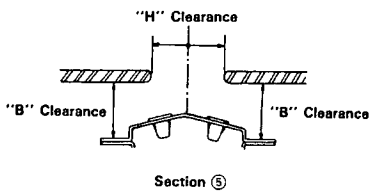

(Standard Clearance)

- Permissible tolerance: ±0.1 mm (0.04 in)

Front: (12) and (13)

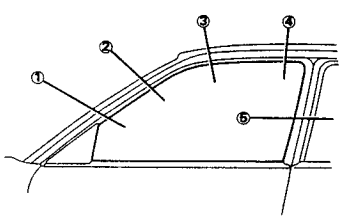

Unit: mm (in)

Measuring Point		①	②	③	④	⑤
Clearance	H	11.0 (0.43)	10.0 (0.39)	9.0 (0.35)	9.0 (0.35)	12.0 (0.47)
	B	19.5 (0.77)	14.5 (0.57)	12.0 (0.47)	12.0 (0.47)	17.0 (0.67)

Rear: (14) and (15)

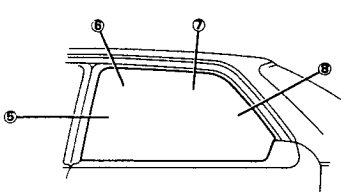

Measuring Point		⑤	⑥	⑦	⑧
Clearance	H	11.0 (0.43)	9.0 (0.35)	9.0 (0.35)	11.0 (0.43)
	B	17.0 (0.67)	12.0 (0.47)	12.0 (0.47)	16.0 (0.63)

Front Door:

12. Adjust clearance "H" as follows.

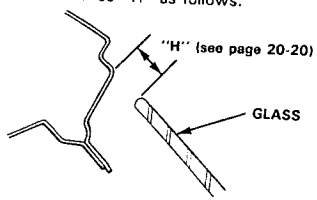

–1 Loosen the two mounting bolts and locknut securing the front sash and move the front sash all the way forward.

NOTE: Hold the adjusting bolt with a hex wrench when loosening the locknut.

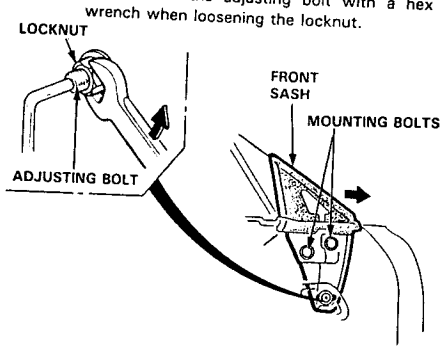

–2 Loosen the nut securing the stopper plates.

–3 Loosen the nut securing the roller guide and move the guide up or down to align the glass with the body at the front and center pillars.

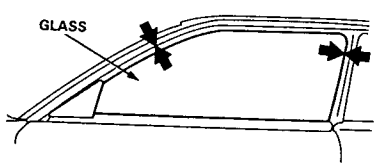

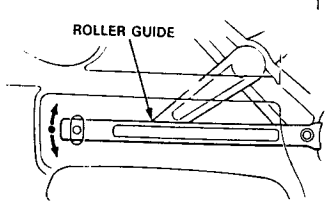

–4 Loosen the mounting nuts and locknuts securing the glass guides and adjust the glass fore and aft by moving the glass guides.

NOTE: Hold the adjusting bolts with a hex wrench when loosening the locknuts.

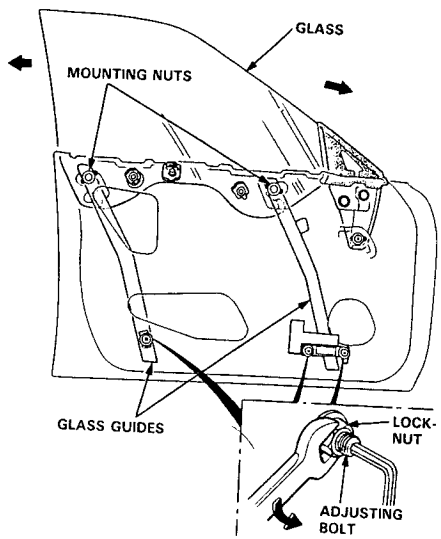

–5 Repeat the steps –3 thru –4 until the clearance "H" is within the specified limits, then fasten the glass guides and roller guide.
Press the stopper plates against the glass stoppers, then fasten the stopper plates.

NOTE: Check that the stopper plates contact the glass stoppers evenly.

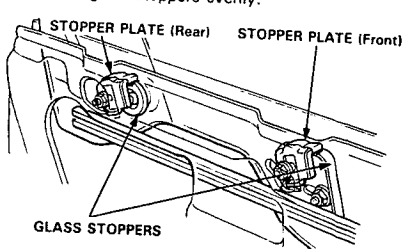

–6 Align the front sash with the glass, then fasten the front sash.

(cont'd)

Glass Adjustment (cont'd)

13. Adjust clearance "B" as follows.

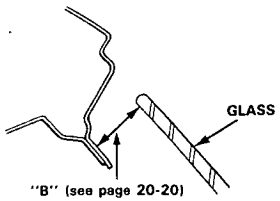

—1 Lower the glass 10 mm (0.39 in).
—2 Push the glass outward 10 mm (0.39 in), then push the inside stabilizers against the glass lightly. Fasten the inside stabilizers.

NOTE: Check that the glass moves smoothly.

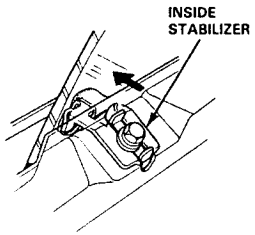

—3 Loosen the locknut and turn the adjusting bolt until the clearance "B" is within the specified value.

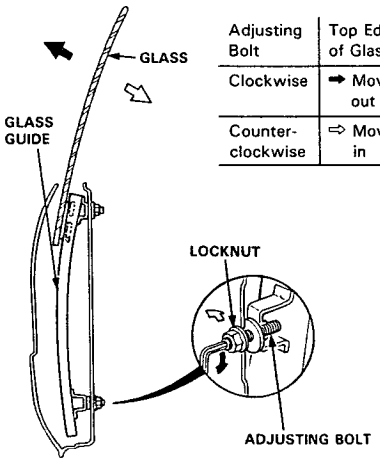

Adjusting Bolt	Top Edge of Glass
Clockwise	➡ Moved out
Counter-clockwise	⇨ Moved in

NOTE: Turn the front and rear adjusting bolts the same amount so as to keep the glass guide parallel with the seating surface of the door.
After tightening the adjusting bolts, make sure that the ends of the adjusting bolts still project out of the locknuts.

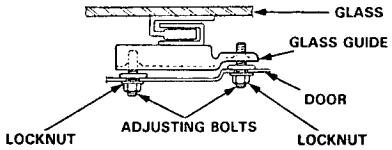

—4 Align the front sash with the glass with the adjusting bolt at the bottom of the front sash.

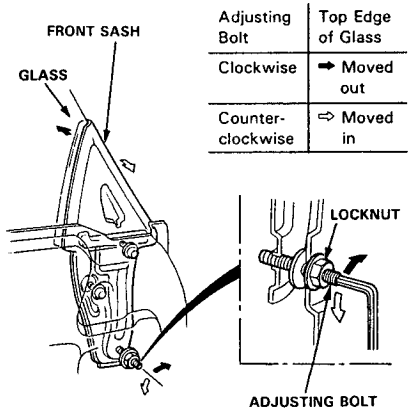

Adjusting Bolt	Top Edge of Glass
Clockwise	➡ Moved out
Counter-clockwise	⇨ Moved in

—5 Move the glass up and down to seat it, then measure the clearance "B" at the designated locations.

—6 Again measure the clearance "H" to make sure it is still within the specified limits at the designated locations.

NOTE: Repeat the above steps until the correct clearances are obtained.

Rear Door:
14. Adjust clearance "H" as follows.

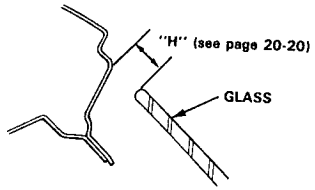

—1 Loosen the nut securing the stopper plates.

—2 Loosen the nut securing the roller guide and move the guide up or down to align the glass with the body at the rear and center pillars.

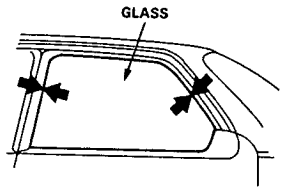

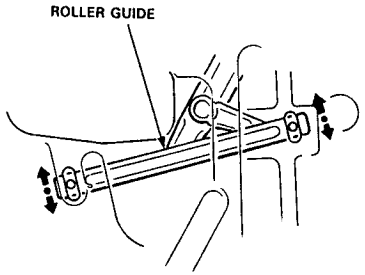

—3 Loosen the locknuts securing the center glass guide and adjust the glass fore and aft by moving the center glass guide.

NOTE: Hold the adjusting bolts with a hex wrench or flat tip screwdriver when loosening the locknuts.

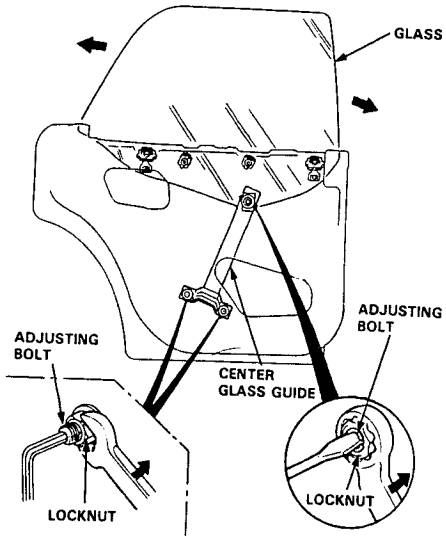

—4 Repeat the steps —2 and —3 until clearance "H" is within the specified limits, then fasten the center glass guide and roller guide.
Press the stopper plates against the glass stoppers, then fasten the stopper plates.

NOTE: Check that the stopper plates contact the glass stoppers evenly.

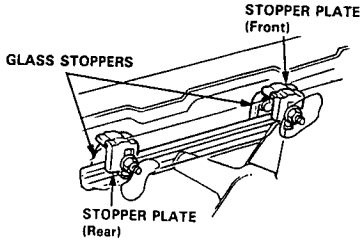

(cont'd)

Glass Adjustment (cont'd)

15. Adjust clearance "B" as follows.

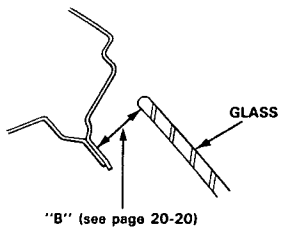

—1 Lower the glass 10 mm (0.39 in).

—2 Push the glass outward 10 mm (0.39 in), then push the inside stabilizers against the glass lightly. Fasten the inside stabilizers.

NOTE: Check that the glass moves smoothly.

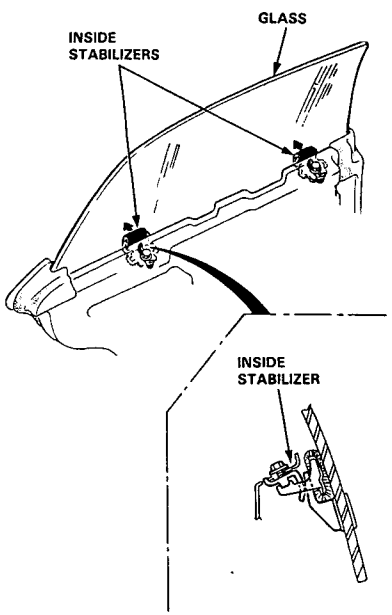

—3 Loosen the locknut at upper the center glass guide and turn the adjusting bolt until the clearance "B" is within the specified value.

Adjusting Bolt	Top Edge of Glass
Clockwise	➡ Moved out
Counter-clockwise	⇨ Moved in

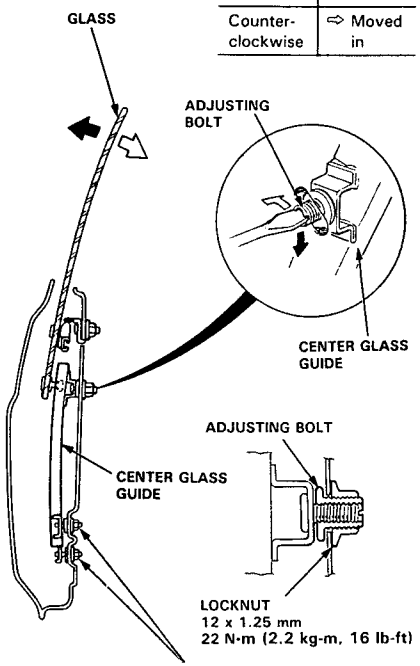

NOTE: Do not adjust the adjusting bolts at lower the center glass guide.

—4 Move the glass up and down to seat it, then measure the clearance "B" at the designated locations.

—5 Again measure the clearance "H" to make sure it is still within the specified limits at the designated locations.

NOTE: Repeat the above steps until the correct clearances are obtained.

16. After the clearances have been adjusted properly, reinstall the weatherstrip.

17. Reinstall the door trim.

18. Check that the glass contacts the weatherstrip evenly.

NOTE: Measuring points are described on page 20-20.

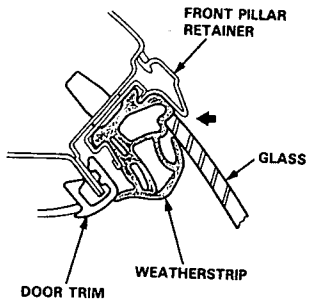

Center Pillar Section:

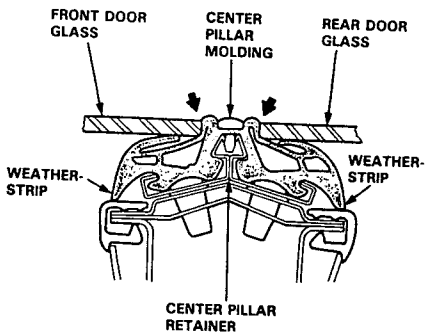

19. Check for water leaks.

NOTE: Do not use high pressure water.

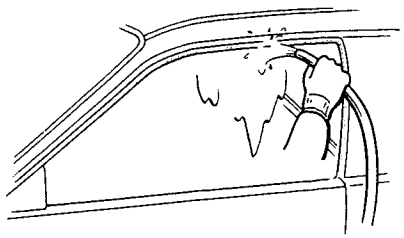

20. Route the door harness and connectors and fasten them to the door (see pages 20-4, 13).

21. Attach the plastic cover, then install the door panel (see pages 20-3, 4, 12, 13).

Doors

Position Adjustment

NOTE: Place the vehicle on a firm, level surface when adjusting the doors.

After installing the door, check for a flush fit with the body, then check for equal gap between the front and rear, and top and bottom door edges and the body. The door and body edges should also be parallel. Adjust at the hinges as shown.

CAUTION: Place a shop towel on the jack to prevent damage to the door when loosening the door and hinge mounting bolts for adjustment.

DOOR MOUNTING BOLTS
8 x 1.25 mm 30 N·m (3.0 kg-m, 22 lb-ft)
Loosen the door mounting bolts slightly to move the door IN or OUT until it's flush with the body. If necessary, you can install a shim behind one hinge to make the door edges PARALLEL with the body.

HINGE MOUNTING BOLTS
8 x 1.25 mm
30 N·m (3.0 kg-m, 22 lb-ft)
Loosen the hinge mounting bolts, and move the door BACKWARD or FORWARD, UP or DOWN as necessary to equalize the gaps.

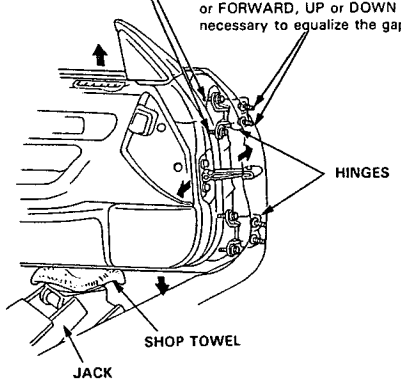

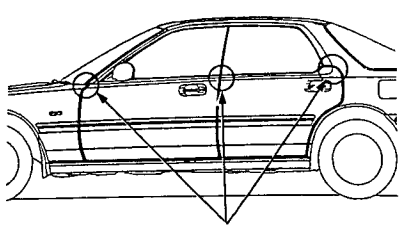

The door and body edges should be paralle.

NOTE:
- Check for water leaks.
- Do not use high pressure water.

Striker Adjustment

Make sure the door latches securely without slamming. if it needs adjustment.

1. Draw a line around the striker for reference.
2. Loosen the screws and move the striker IN or OUT to make the latch fit tighter of looser. Move the striker UP or DOWN to align it with the latch opening. Then lightly tighten the screws and recheck.

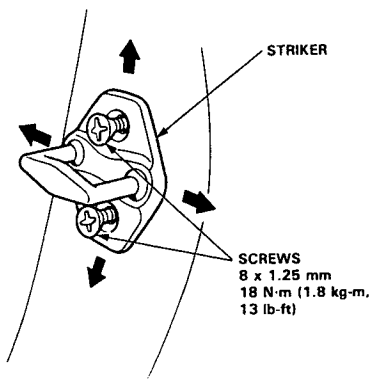

NOTE:
- Hold the outer handle out and push the door against the body to be sure the striker allows a flush fit.
- Do not tap the striker with a metal hammer to adjust the position.

3. If the door latches properly, tighten the screws and recheck.

NOTE: Replace the striker if it is cracked.

Power Door Mirror

Replacement

1. Remove the door panel (see page 20-3) and disconnect the power door mirror connector.
2. Pry the cover panel out with a flat tip screwdriver, then remove the cover panel.

   CAUTION: When prying with a flat tip screwdriver, wrap it with protective tape to prevent damage.

3. Remove the screws while holding the door mirror.

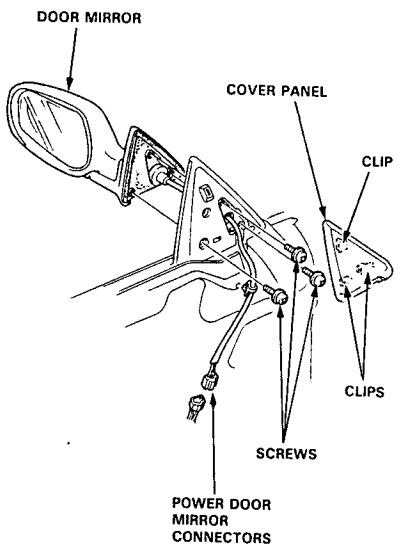

4. Installation is the reverse of the removal procedure.
5. Check for water leaks.

   NOTE: Do not use high pressure water.

Mirror Holder Replacement

1. Insert a screwdriver in the mirror housing through the service hole, then loosen the actuator retaining screw.

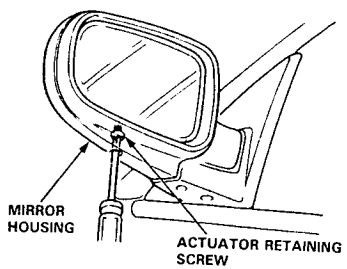

2. Pull the mirror holder out from the mirror housing.
3. Pull the lock cap stopper up and remove the stopper pin, then separate the actuator and mirror holder.

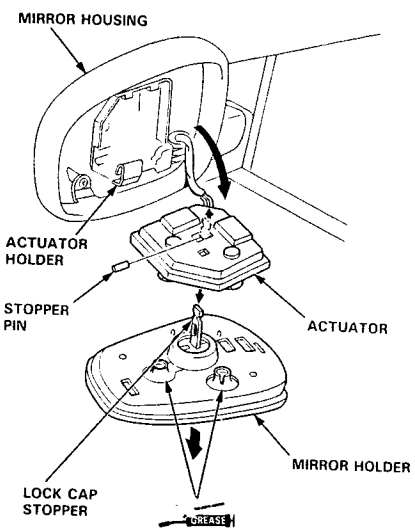

4. Installation is the reverse of the removal procedure.

   NOTE: Apply grease to the locations indicated by the arrows.

Windshield, Rear Window

Index

NOTE: The numbers after the part names show the quantities of the parts used.

Windshield:

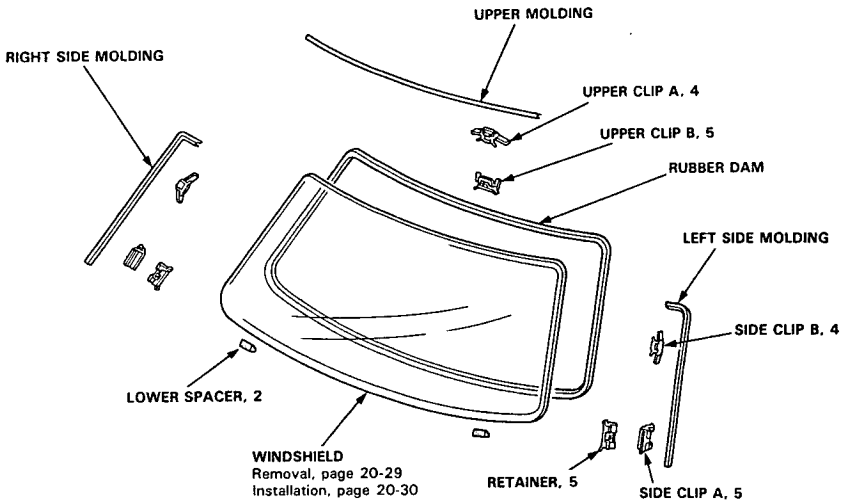

Rear Window:

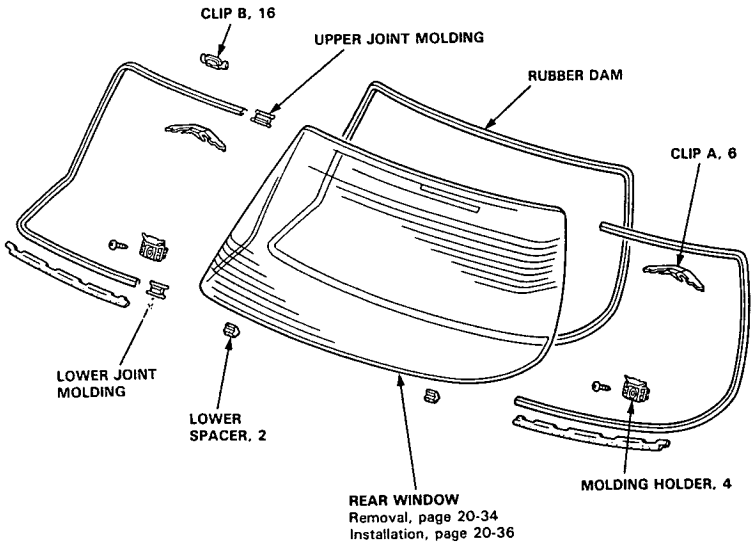

Windshield

Removal

CAUTION:
- **Wear gloves to remove and install the windshield.**
- **Use seat covers to avoid damaging any surfaces.**

1. To remove the windshield, first remove the:
   - Rearview mirror (see page 20-57).
   - Sunvisors, center visor and ceiling light (see page 20-48).
   - Front pillar trim (see page 20-47).
   - Front wipers and air scoop (see section 23).
2. Detach the clips from the retainers, then remove the both side moldings as shown.

   NOTE:
   - If necessary, replace any damaged clips.
   - The numbers after the part names show the quantities of the parts used.

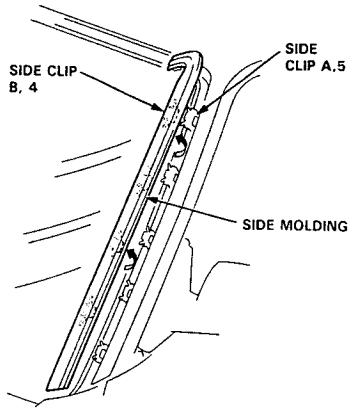

NOTE: You will need a molding clip release tool to remove some moldings. If necessary, make one that has the dimensions shown.

Molding Clip Release Tool:

Thickness: 2 mm (0.08 in), pointed at the end.

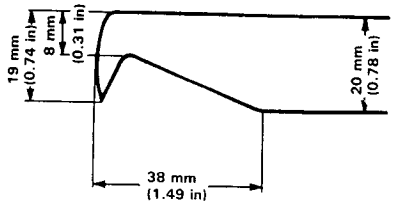

3. Remove the upper molding with a molding clip release tool.
4. Detach the clips and remove the upper moldings.

   NOTE: The numbers after the part names show the quantities of the parts used.

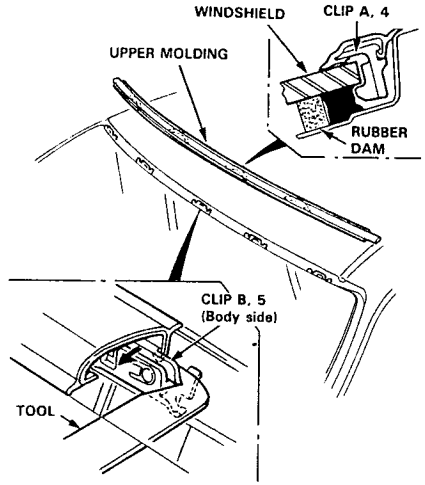

5. Remove the other clips and retainers from the body.
6. Pull down the front of headliner (see page 20-48).

   CAUTION: Take care not to bend the headliner excessively.
7. Apply protective tape to the edge of the dashboard and body as shown.

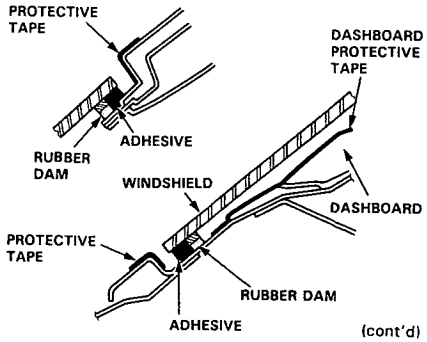

(cont'd)

Windshield

Removal (cont'd)

8. Using an awl, make a hole through the rubber dam and adhesive from inside the car. Push the piano wire through the hole and wrap each end around a piece of wood.

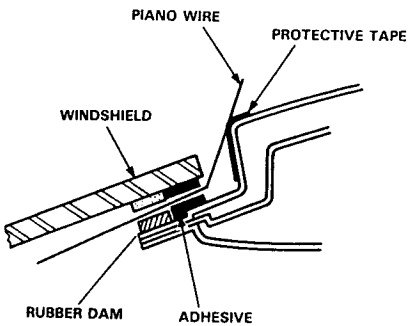

9. With a helper on the outside, pull the piano wire back and forth in a sawing motion and carefully cut through the adhesive around the entire windshield, then carefully remove the windshield.

CAUTION: Hold the piano wire as close to the windshield as possible to prevent damage to the body and dashboard.

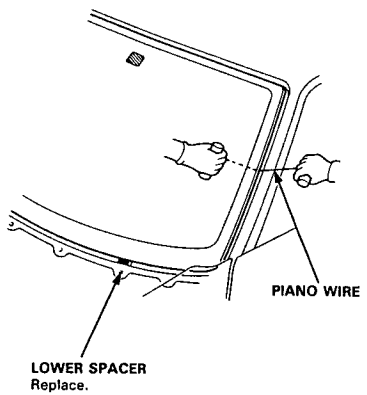

10. Cut the lower spacers away from the body with a knife; they are cemented in place.

NOTE: Replace the lower spacers with new ones whenever the windshield is removed.

Installation

1. Scrape the old adhesive smooth with a knife, to a thickness of about 2 mm (0.08 in) on the bonding surface around the entire windshield opening flange.

NOTE:
- Do not scrape down to the painted surface of the body; damaged paint will interfere with proper bonding.
- Remove the rubber dam and lower spacers from the body.
- Mask off surrounding surfaces before painting.

2. Clean the body bonding surface with a sponge dampened in alcohol.

NOTE: After cleaning, keep oil, grease and water from getting on the surface.

3. If the old windshield is to be reinstalled, use a putty knife to scrape off all traces of old adhesive, then clean the windshield surface with alcohol where new adhesive is to be applied.

NOTE: Make sure the bonding surface is kept free of water, oil and grease.

CAUTION: Avoid setting the windshield on its edges: small chips may later develop into cracks.

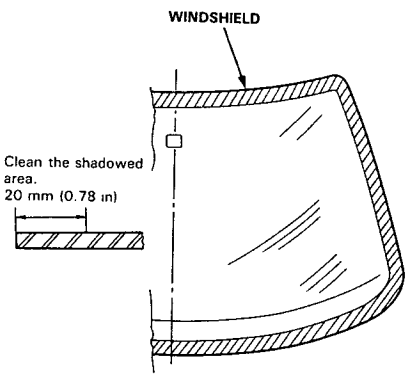

4. Glue the rubber dam to the inside face of the windshield as shown, to contain the adhesive during installation.

NOTE: Be careful not to touch the windshield where adhesive will be applied.

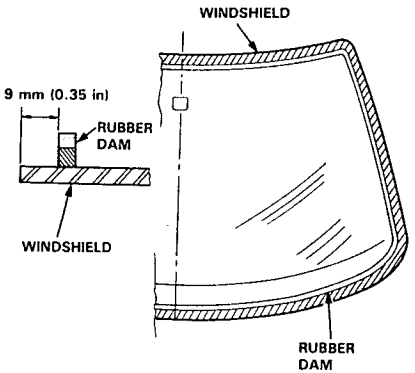

5. Install the clips and retainers as shown. Glue the lower spacers to the body.

NOTE: The numbers after the part names show the quantities of the parts used.

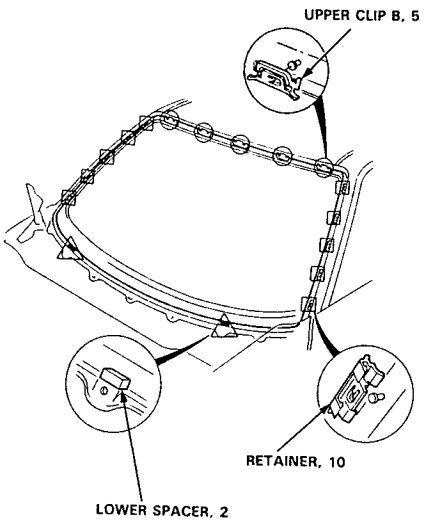

6. Set the windshield upright on the lower spacers, then center it in the opening. Make alignment marks across the windshield and body with a grease pencil at the four points shown.

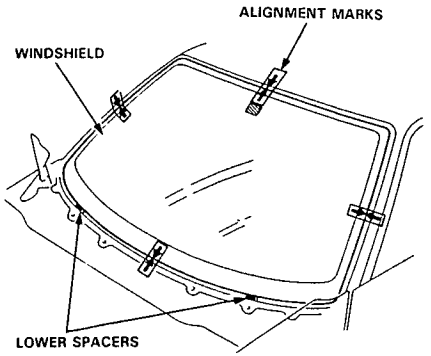

7. With a sopnge, apply a light coat of glass primer around the edge of the windshield as shown, then lightly wipe it off with gauze or cheesecloth.

NOTE:
- Do not apply body primer to the windshield, and do not get body and glass primer sponges mixed up.
- Never touch the primed surfaces with your hands. If you do, the adhesive may not bond to the windshield properly, causing a leak after the windshield is installed.
- Keep water, dust, and adrasive materials away from the primed surface.

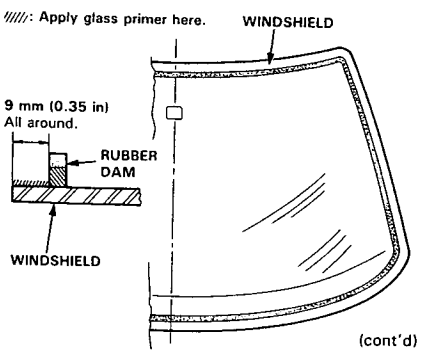

(cont'd)

Windshield

Installation (cont'd)

8. With a sponge, apply a light coat of body primer to the original adhesive remaining around the windshield opening flange. The windshield should be installed 10 minutes after you apply the body primer.

   NOTE:
   - Do not apply glass primer to the body, and the careful not to mix up glass and body primer sponges.
   - Never touch the primed surfaces with your hands.
   - Mask off the dashboard before painting the flange.

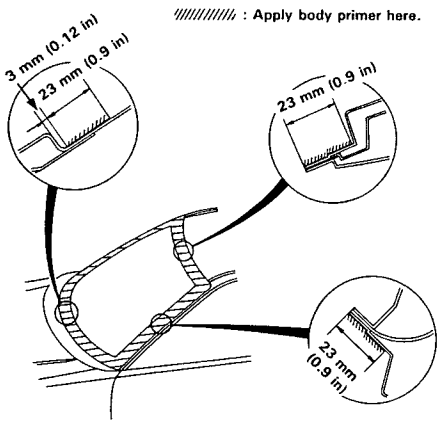

9. Thoroughly mix all the adhesive and hardener together on a glass or metal plate with a putty knife.

   NOTE:
   - Clean the plate with a sponge and alcohol before mixing.
   - Follow the instructions that come with the adhesive.

10. Before filling a cartridge, cut the end of the nozzle as shown.

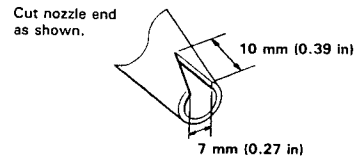

11. Pack adhesive into the cartridge without air pockets to ensure continuous delivery. Put the cartridge in a caulking gun and run a bead of adhesive around the edge of the windshield as shown.

    NOTE: Apply the adhesive within 30 minutes after applying the glass primer.

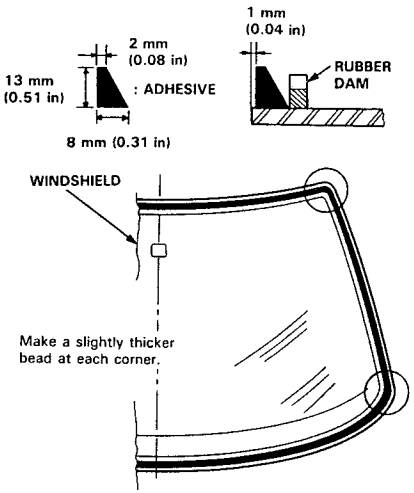

12. Use suction cups to hold the windsheld over the opening, align it with the alignment marks made in step 6 and set it down on the adhesive. Lightly push on the windshield until its edge is fully seated on the adhesive all the way around.

    NOTE: Do not close or open the doors until the adhesive is dry.

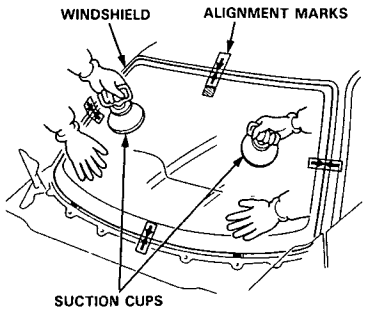

13. Install the clips on the lower molding, upper molding and side molding.

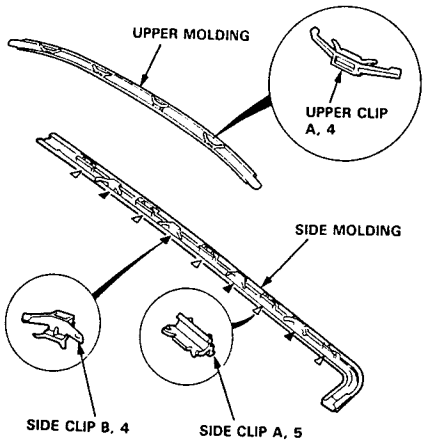

NOTE: The number after the part names show the quantities of the parts used.

14. Scrap or wipe the excess adhesive off with a putty knife or towel.

    NOTE: To remove adhesive from a painted surface or the windshield wipe with a soft shop towel dampened with alcohol.

15. Install the upper molding and lower molding.

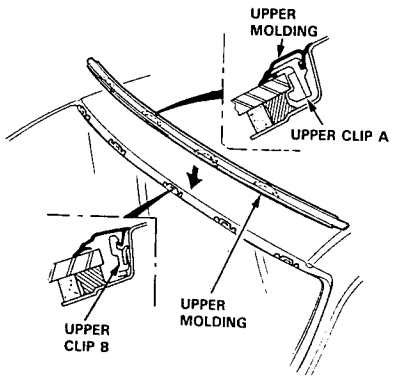

16. Install the side molding.

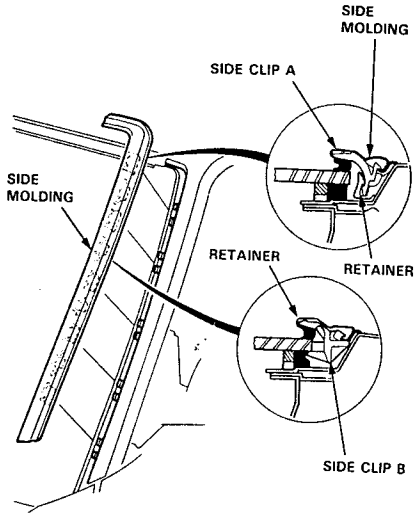

17. Let the adhesive dry for at least one hour, then spray water over the windshield and check for leaks. Mark leaking areas and let the windshield dry, then seal with sealant.

    NOTE:
    - Let the car stand for at least four hours after windshield installation. If the car has to be used within the first four hours, it must be driven slowly.
    - Keep the windshield dry for the first hour after installation.
    - Check that the ends of the side molding are set under the air scoop.

18. Reassemble all removed parts.

    NOTE: Install the rearview mirror after the adhesive has dryed thoroughly.

Rear Window

Removal

CAUTION:
- **Wear gloves to remove and install the rear window.**
- **Do not damage the defroster grid lines.**

1. To remove the rear window, first remove:
   - Trunk lid (see page 20-69)
   - Rear seat-back (see page 20-53)
   - Rear shelf (see page 20-47)
   - Rear pillar trim panel (see page 20-47)

2. Disconnect the defroster leads, and remove their holders.

   NOTE: Avoid scratching the rear window with the cutter blade.

3. Remove the molding holders and detach each clip B (see molding clip release tool page 20-29).

   NOTE: The numbers after the part names show the quantities of the parts used.

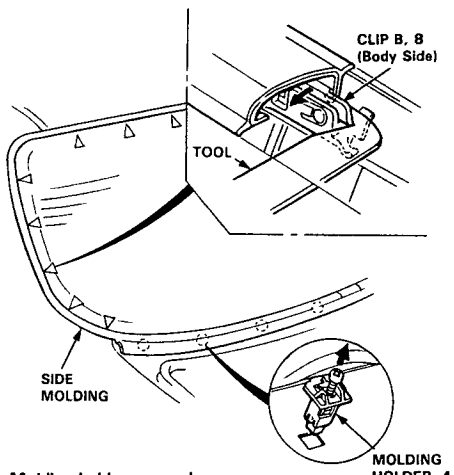

Molding holder removal:

1) Remove or loosen the screw.

2) Place the screw in the screw grommet again (do not screw it in) and press it down.

3) Pull the screw with the molding holder out of the body.

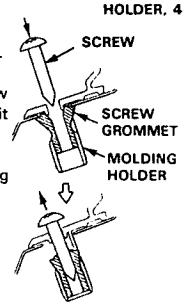

4. Detach each clip A and remove the side molding.

   NOTE: The numbers after the part names show the quantities of the parts used.

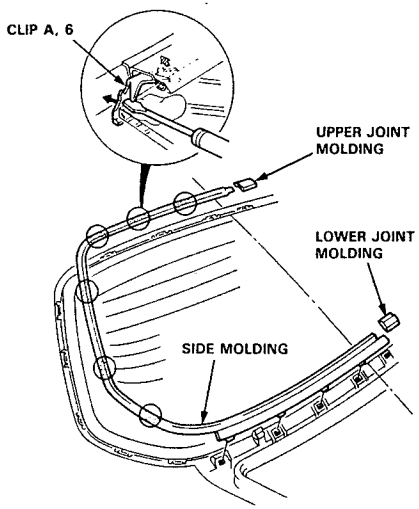

5. Remove the other clips and retainers from the body.

6. Pull down the rear of the headliner (see page 20-48).

   CAUTION: Take care not to bend the headliner excessively.

7. Apply protective tape to the edge of the body as shown.

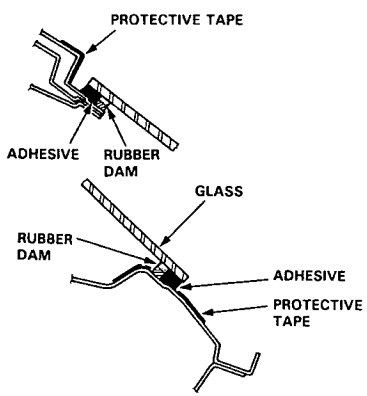

8. Using an awl, make a hole through the rubber dam and adhesive from inside the car. Push the piano wire through the hole and wrap each end around a piece of wood.

9. With a helper on the outside, pull the piano wire back and forth in a sawing motion and carefully cut through the rubber dam and adhesive around the entire rear window, then carefully remove the rear window.

   CAUTION: Hold the piano wire as close to the rear window as possible to prevent damage to the body.

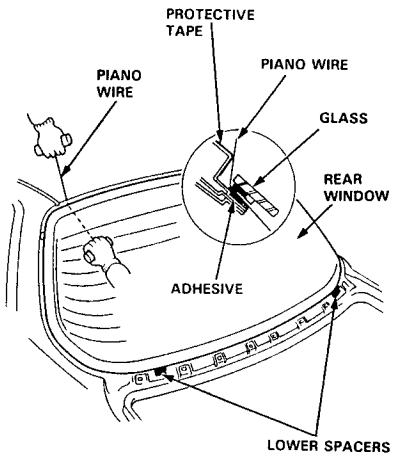

10. Cut the lower spacers away from the body with a knife: they are cemented in place.

    NOTE: Replace the lower spacers with new ones whenever the rear window is removed.

Rear Window

Installation

1. Scrape the old adhesive smooth with a knife, to a thickness of about 2 mm (0.08 in) on the bonding surface around the entire rear window flange.

   NOTE:
   - Do not scrape down to the painted surface of the body; damaged paint will interfere with proper bonding.
   - Remove the rubber dam from the body.
   - Mask off surrounding surfaces before applying primer.

2. Clean the body bonding surface with a sponge dampened in alcohol.

   NOTE: After cleaning, keep oil, grease and water from getting on the surface.

3. If the old rear window is to be reinstalled, use a putty knife to scrape off all traces of old adhesive, then clean the rear window surface with alcohol where new adhesive is to be applied.

   NOTE: Make sure the bonding surface is kept free of water, oil and grease.

   CAUTION: Avoid setting the rear window on its edges; small chips may later develop into cracks.

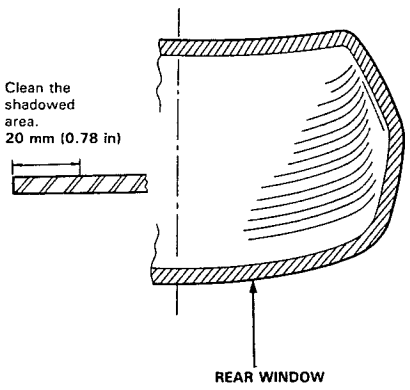

4. Install the molding clips and retainers as shown. Glue the lower spacers to the body.

   NOTE: The numbers after the part names show the quantities of the parts used.

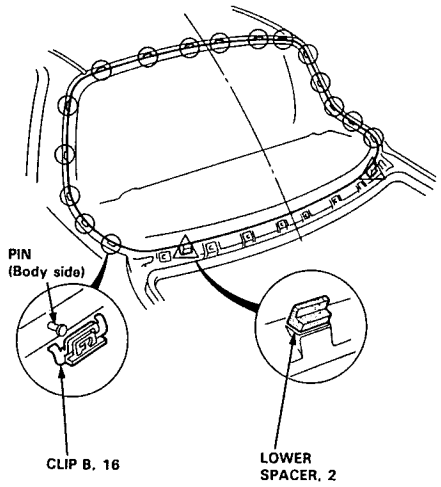

5. Glue the rubber dam to the inside face of the rear window as shown to contain the adhesive during installation.

   NOTE: Be careful not to touch the rear window where ahesive will be applied.

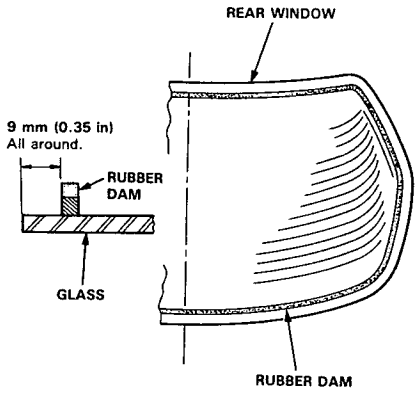

6. Set the rear window upright on the lower spacers, then center it in the opening. Make alignment marks across the rear window and body with a grease pencil at the four points shown.

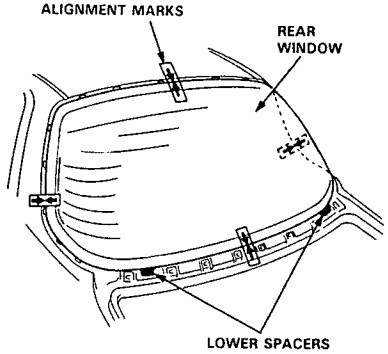

7. With a sponge, apply a light coat of glass primer around the edge of the rear window as shown, then lightly wipe it off with gauze or chessecloth.

   NOTE:
   - Do not apply body primer to the rear window, and do not get body and glass primer sponges mixed up.
   - Never touch the primed surfaces with your hands. If you do, the adhesive may not bond to the rear window properly, causing a leak after the rear window is installed.
   - Keep water, dust, and abrasive materials away from the primed surface.

   ////// : Apply glass primer here.

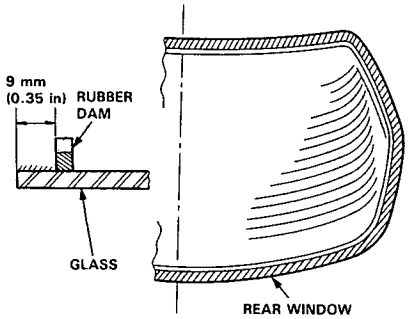

8. With a sponge, apply a light coat of body primer to the original adhesive remaining around the rear window opening flange.
   The rear window should be installed 10 minutes after you apply the body primer.

   NOTE:
   - Do not apply glass primer to the body, and be careful not to mix up glass and body primer sponges.
   - Never touch the primed surfaces with your hands.

   ////// : Apply body primer here.

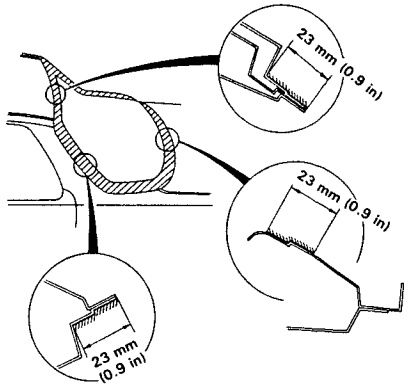

9. Throughly mix the adhesive and hardener together on a glass or metal plate with a putty knife. Follow the instructions that came with the adhesive.

   NOTE:
   - Clean the plate with a sponge and alcohol before mixing.
   - Follow the instructions that came with the adhesive.

10. Before filling a cartridge, cut the end of the nozzle as shown.

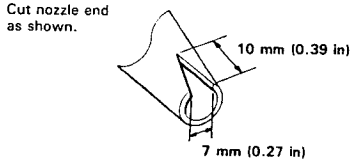

(cont'd)

Rear Window

Installation (cont'd)

11. Pack adhesive into the cartridge without air pockets to ensure continuous delivery. Put the cartridge in a caulking gun and run a bead of adhesive around the edge of the rear window as shown.

    NOTE: Apply the adhesive within 30 minutes after applying the glass primer.

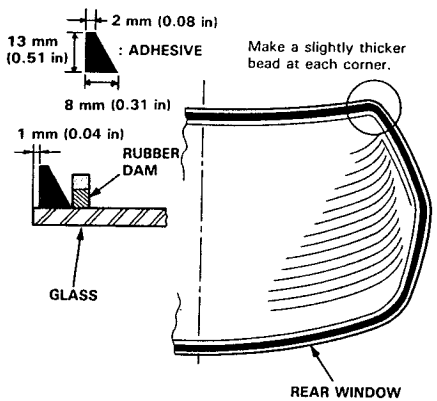

12. Use suction cups to hold the rear window over the opening, align it with the alignment marks made in step 6 and set it down on the adhesive. Lightly push on the rear window until its edges are fully seated on the adhesive all the way around.

    NOTE: Do not close or open the doors until adhesive is dry.

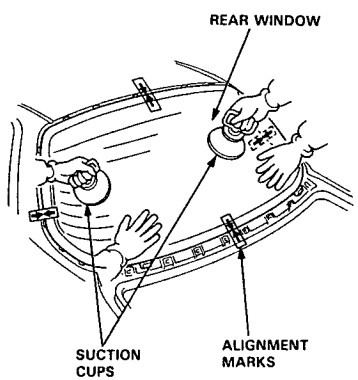

13. Scrape or wipe the excess adhesive off with a putty knife or towel.

    NOTE: To remove adhesive from a painted surface or the rear window, use a soft shop towel dampened with alcohol.

14. Install the clips and molding holders on the side molding.

    NOTE: The numbers after the part names show the quantities of the parts used.

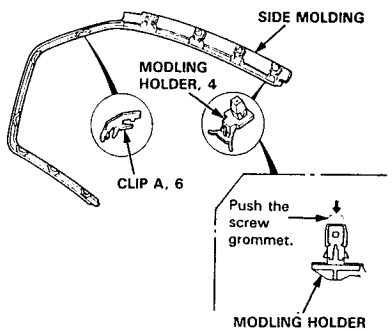

15. Install both side moldings.

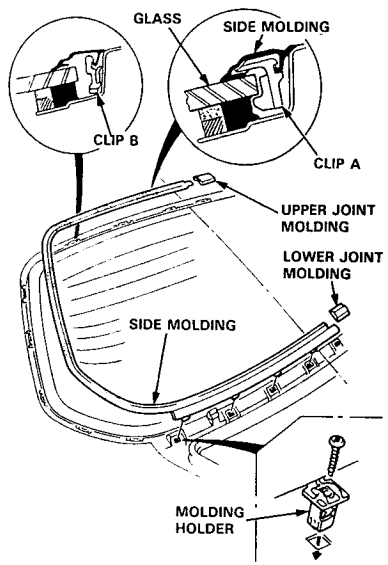

16. Let the adhesive dry for at least one hour, then spray water over the rear window and check for leaks. Mark leaking areas and let the rear window dry, then seal with sealant.

    NOTE: Let the car stand for at least four hours after rear window installation. If the car has to be used within the first four hours, it must be driven slowly.

17. Raise the headliner back up into position reconnect the defogger leads, then install:
    - Rear pillar trim panel.
    - Rear shelf.
    - Rear seat-back.

Moonroof

Index

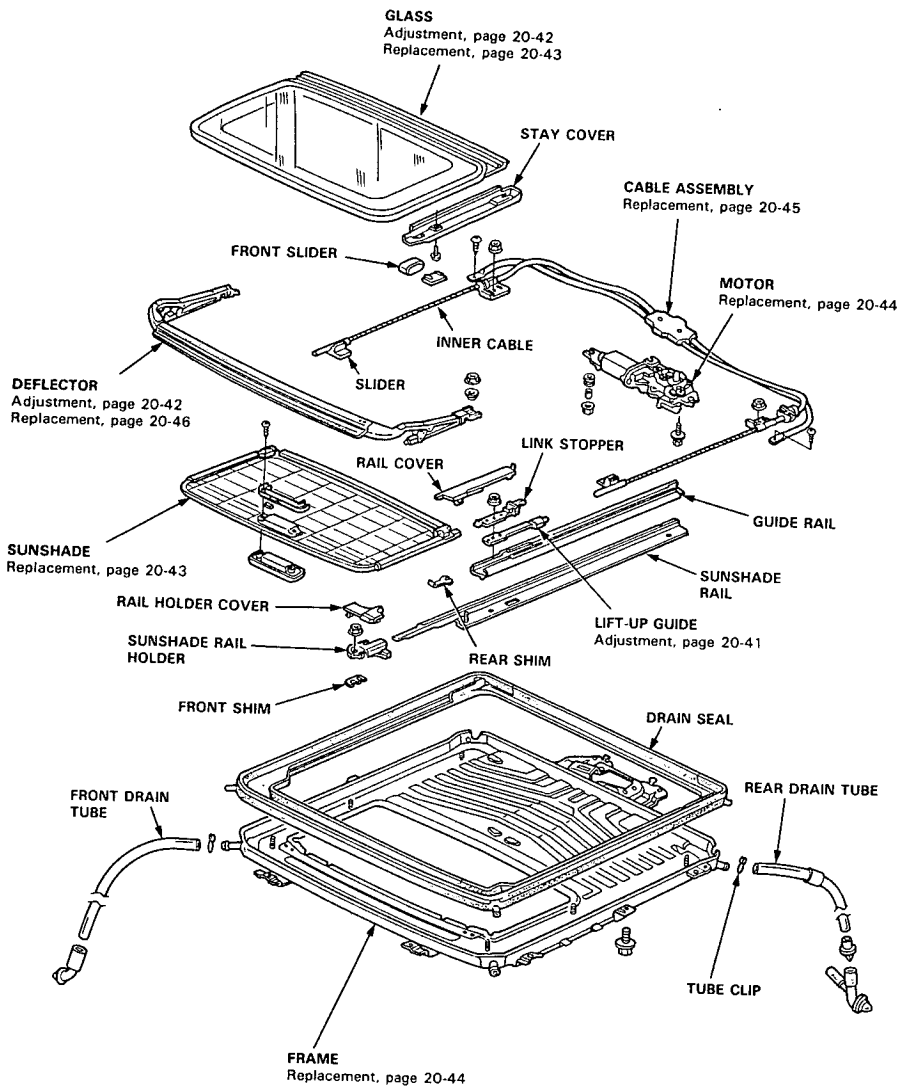

Troubleshooting

Symptom	Probable Cause
Water leaks	1. Clogged drain tube. 2. Gap between glass weatherstrip and roof panel. 3. Defective or improperly installed glass weatherstrip. 4. Gap between drain seal and roof panel.
Wind noise	1. Excessive clearance between glass weatherstrip and roof panel.
Deflector noise	1. Improper clearance between deflector seal and frame seal. 2. Insufficient deflector extension. 3. Deformed deflector.
Motor noise	1. Loose motor. 2. Worn gear or bearing. 3. Cable assembly.
Glass does not move, but motor turns	1. Clutch out of adjustment. 2. Foreign matter stuck between guide rail and slider. 3. Inner cable loose. 4. Cable assembly.
Glass does not move and motor does not turn (Glass can be moved with moonroof wrench)	1. Blown fuse. 2. Faulty switch. 3. Battery run down. 4. Defective motor. 5. Faulty relay.

Glass Rear Edge Closing Adjustment

Open the glass about a foot, then close it to check where rear edge begins to rise. If it rises too soon and seats too tightly against the roof panel, or too late and does not seat tightly enough, adjust it.

1. Open the glass fully.
2. Remove the rail covers (see page 20-46) from both sides, and loosen the lift-up guide nuts.
3. Move the lift-up guides and link stopper forward or backward, then tighten the lift-up guide nuts and recheck glass closing.

   The lift-up guides have piches of 1.5 mm (0.06 in) each and can be adjusted two pitches forward or backward.
4. If necessary, lower the rear of the headliner and remove the motor (see page 20-44), then adjust the inner cables (location of sliders) until they are parallel.

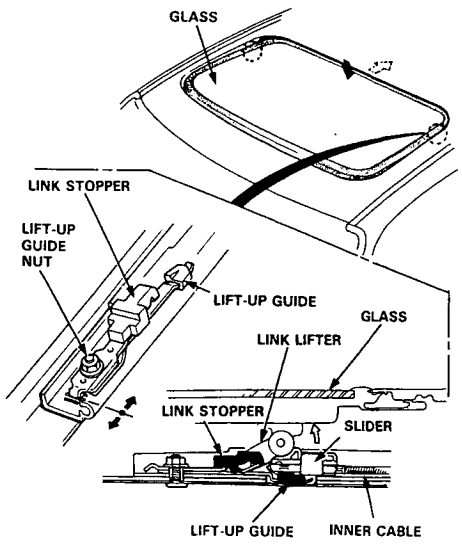

Moonroof

Glass Height Adjustment

The roof panel should be even with the glass weatherstrip, to within 1 ± 0.5 mm (0.04 ± 0.02 in) all the way around.
If not, open the glass fully, and:

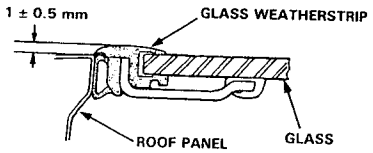

Front:

1. Pry out the rail holder cover (see page 20-46) and loosen the mounting nut.
2. Install the front shims between frame and sunshade rail holder.

   FRONT: Shim thickness Max. 2 mm (0.08 in)

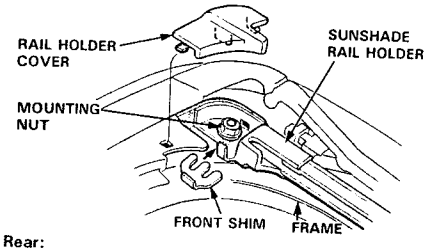

Rear:

1. Remove the rail cover (see page 20-46) and loosen the lift-up guide nut.
2. Install the rear shims between guide rail and sunshade rail.
   REAR: Shim thickness Max. 2 mm (0.08 in)

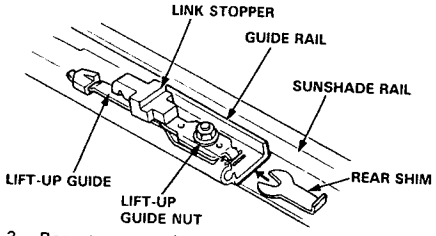

3. Repeat on opposite side if necessary.
4. Side-to-side fit of the glass weatherstrip can be adjusted by loosening the frame mounting bolts and moving the frame (see page 20-44).

Deflector Adjustment

NOTE: A gap between deflector seal and roof panel will cause wind noise when driving at high speed with the glass open.

1. Open the glass and pry the rail covers (see page 20-46) off both sides.
2. Loosen the deflector mounting nuts.

   NOTE: The deflector can be adjusted 2 mm (0.08 in) forward or backward.

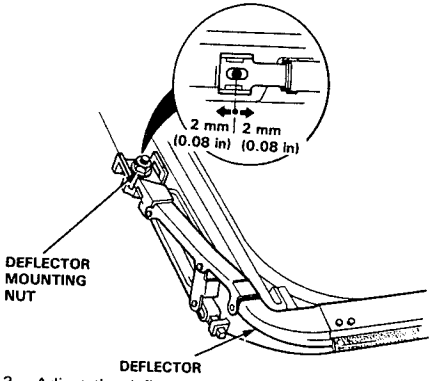

3. Adjust the deflector forward or backward so the edge of the deflector seal touches the roof panel evenly. The deflector seal should touch the roof panel across entire front edge.

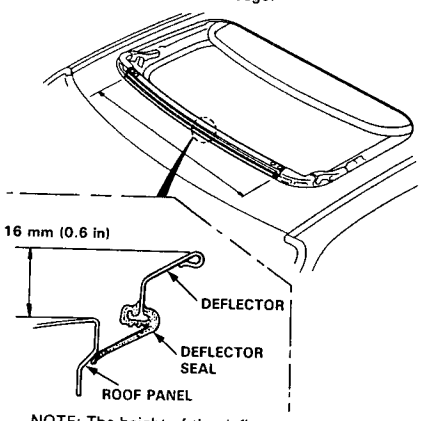

NOTE: The height of the deflector when open cannot be adjusted. If damaged or deformed, repace it (see page 20-46).

Glass and Sunshade Replacement

1. Open the glass fully.
2. To remove the glass, first remove:
   - Rail holder covers
   - Rail covers
   - Sunshade rail holders
   - Deflector
   - Link stoppers
   - Lift-up guides

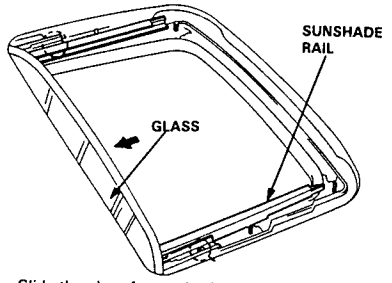

3. Slide the glass forward using the moonroof wrench, then remove the front sliders from the sunshade rails.

   NOTE: Do not scratch the roof panel with the front slider.

4. Lift the sunshade rail with the guide rail and insert a spacer such as a wooden block to prevent interference between the sunshade rail and bolt.

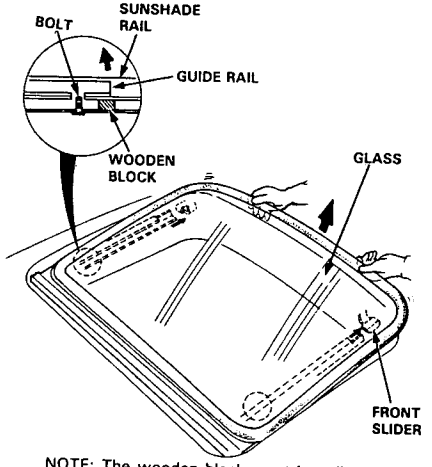

NOTE: The wooden block must be taller than the bolt.

5. Remove the link slider from the inner cable sliders by lifting the glass, then remove the glass.

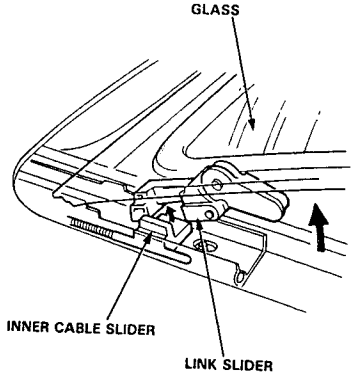

6. Slide the sunshade forward, then remove the sunshade.

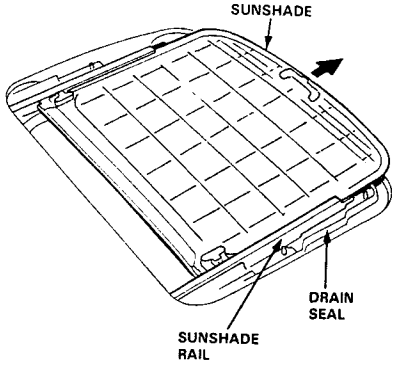

7. Installation is the reverse of the removal procedure.

   NOTE:
   - Take care not to pinch the drain seal in the sunshade rail.
   - Check for water leaks.

Moonroof

Motor, Drain Tube and Frame Replacement

CAUTION: Be careful not to damage the seats, dashboard and other interior trim.

1. Remove the headliner (see page 20-48).
2. Disconnect the connector of the motor; remove the clips securing the ceiling light wire harness.

   NOTE: When removing the motor, remove the two mounting bolts and three nuts.

3. Disconnect the drain tubes.
4. Remove the 10 mounting bolts and rear hooks, then remove the frame from the car.

   NOTE: You may require assistance when removing the frame.

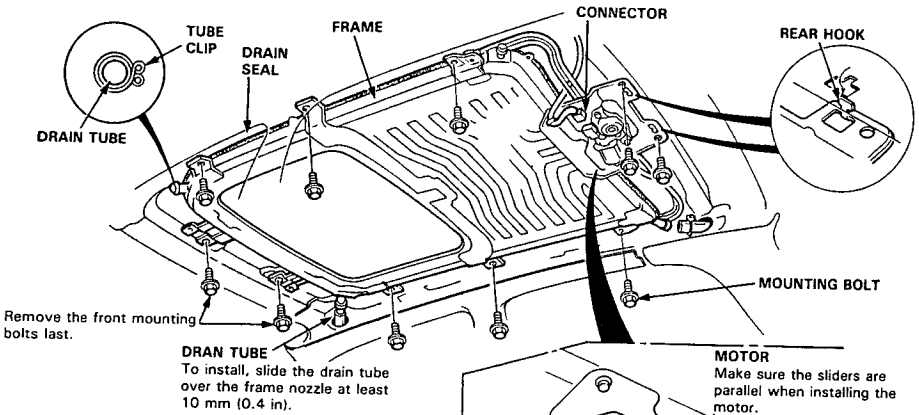

5. Pull the drain tubes out the front and rear pillars.

   NOTE: Before pulling out the drain tube, tie a string to the end of it so it can be reinstalled.

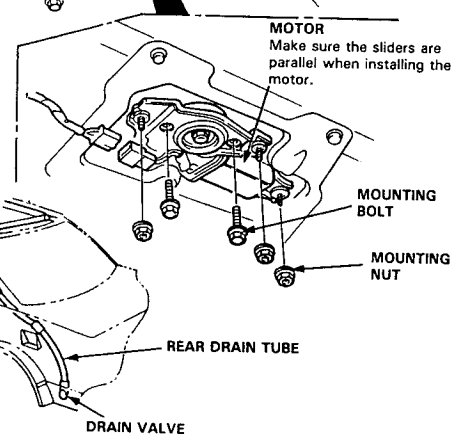

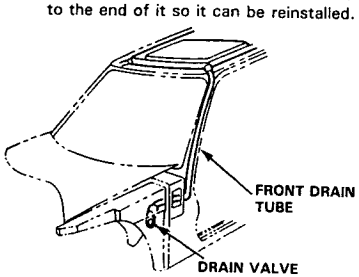

6. Installation is the reverse of the removal procedure.

   NOTE:
   - Insert the frame's rear hooks into the body holes.
   - Install the tube clips with the ends facing the side to ease installation of the headliner.
   - Clean the surface of frame.
   - Check the drain seal.
   - Check for water leaks.

Guide Rails/Cable Assembly Replacement

1. With frame out of the car, remove the motor from the frame (see page 20-44).
2. Remove the mounting nuts and lift off the guide rails, then remove the cable assembly with sliders attached.
3. If necessary, remove the sunshade rail and drain seal from the frame.

   NOTE: Take care not to bend the cable pipes and guide rails.

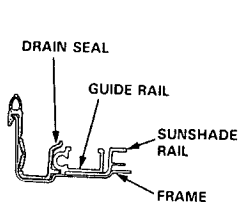

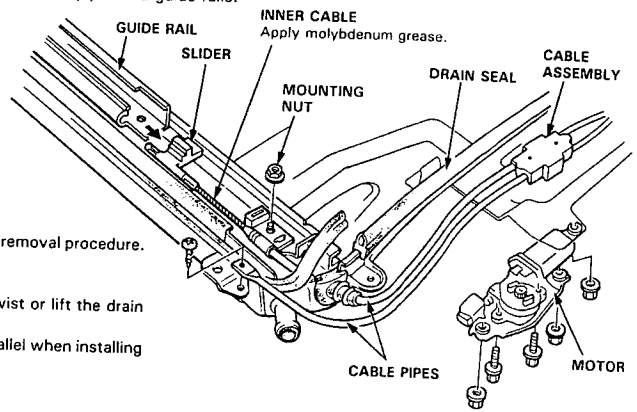

4. Installation is the reverse of the removal procedure.

   NOTE:
   - Take care not to damage, twist or lift the drain seal.
   - Make sure the sliders are parallel when installing the motor.

Link Slider/Lift-up Link Disassembly

1. Remove the glass (see page 20-43).
2. Pull the front slider from the front stay.
3. Remove the link lifter, then remove the E-clip.
4. Remove the lift-up link from the rear stay. Drive the link shaft out, then separate the lift-up link and link slider.

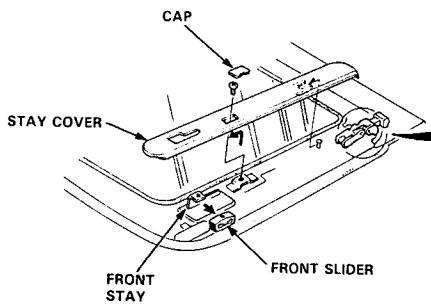

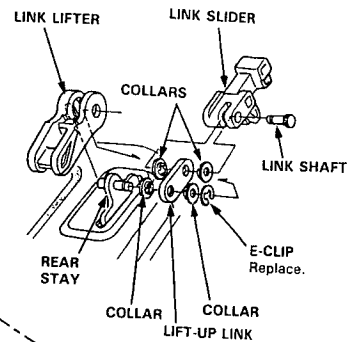

5. Installation is the reverse of the removal procedure.

   NOTE:
   - Damaged parts should be replaced.
   - Apply the grease to the sliding portion.

Moonroof

Opening Drag Check (Motor Removed)

Before installing the motor, measure the effort required to open the glass using a spring scale as shown.

CAUTION: When using a spring scale, protect the leading edge of the glass with a shop towel.

If the load is over 98 N (10 kg, 22 lbs), check side clearance and glass height adjustment (see page 20-42).

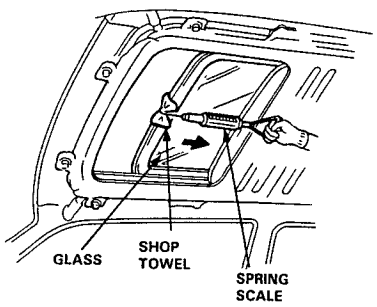

Lift-up Guide/Deflector Replacement

Mounting nuts torque: 9 N·m (0.9 kg-m, 6.5 lb-ft)

NOTE: On reassembly, use liquid thread lock.

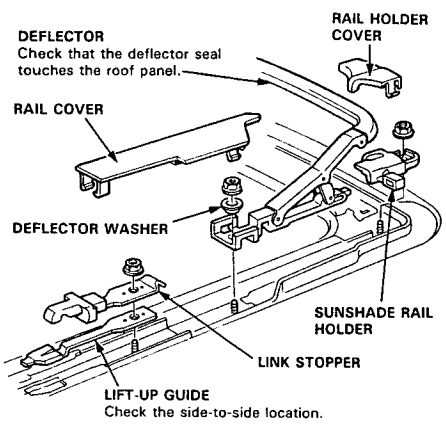

Closing Force Check (Motor Installed)

1. After installing all removed parts, have a helper hold the switch to close the glass while you measure the force required to stop it. Attach a spring scale as shown. Read the force as soon as glass stops moving, then immediately release the switch and spring scale.

   CAUTION: When using a spring scale, protect the leading edge of the glass with a shop towel.

   Closing Force: 196–245 N (20–30 kg, 44–55 lbs)

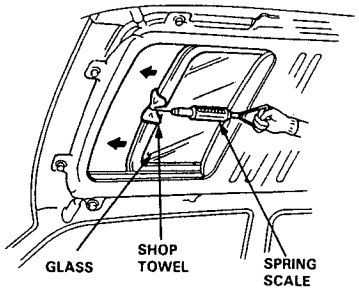

2. If the force is not within specification, install a new lock washer, adjust the tension by turning the motor clutch adjusting nut, then bend the lock washer against the motor clutch adjusting nut.

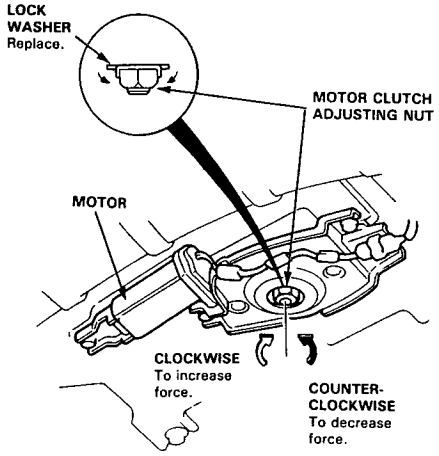

Interior Trim

Replacement

▷: Clip locations

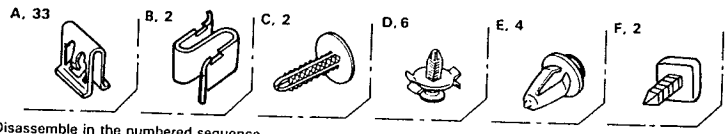

Disassemble in the numbered sequence.
NOTE: Take care not to bend or scratch the trim and panels.

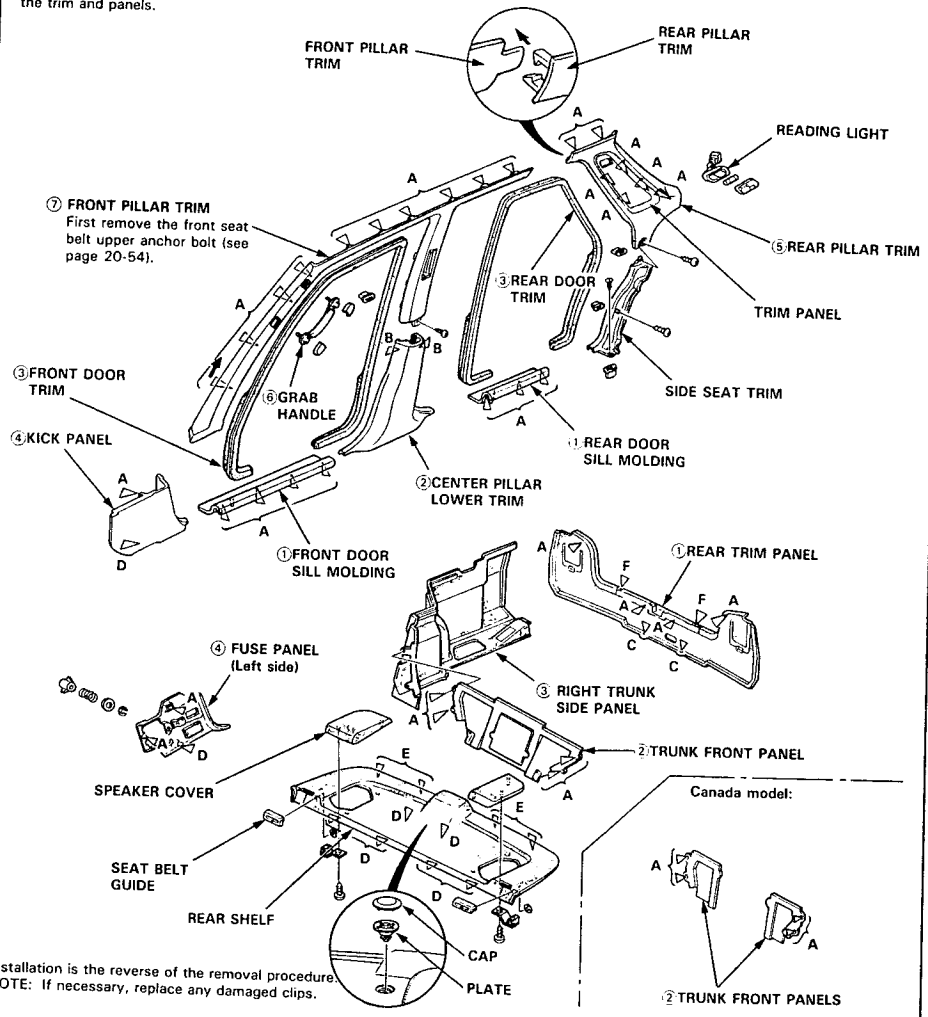

Installation is the reverse of the removal procedure.
NOTE: If necessary, replace any damaged clips.

Headliner

Replacement

1. Remove:
   - Sunvisors and center visor
   - Ceiling light
   - Rearview mirror (see page 20-57)
   - Front pillar trim (see page 20-47)
   - Rear pillar trim (see page 20-47)
   - Roof trim and access cap
   - Grab handles
   - Front seat (see page 20-49)
   - Rear seat (see page 20-53)

2. Remove the clips, then remove the headliner.

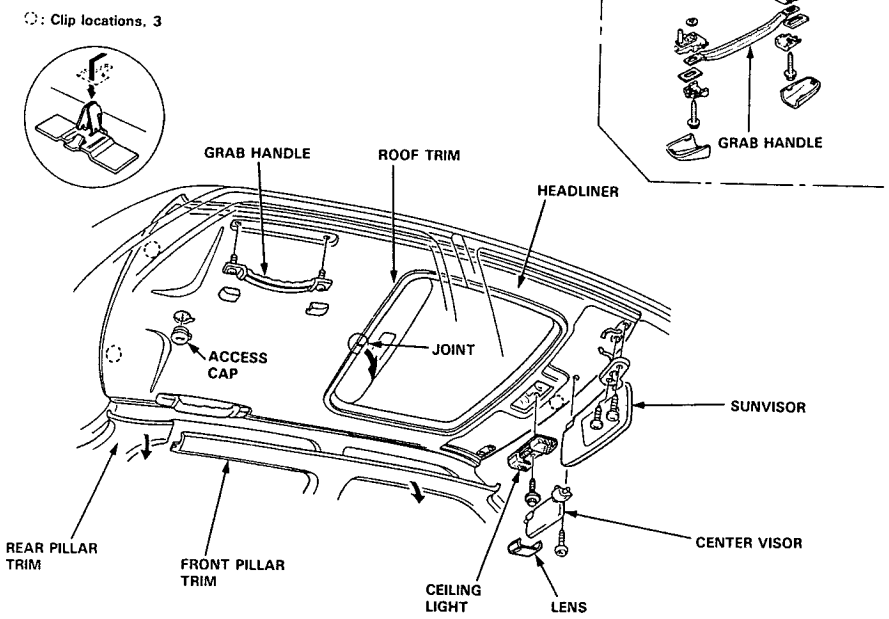

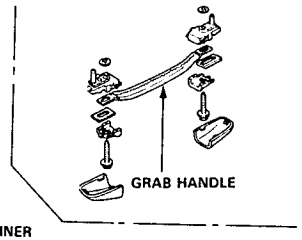

3. Remove the headliner from the passenger's side door opening.

   NOTE:
   - Take care not to bend the headliner.
   - Keep water away from the headliner.
   - Be careful not to damage the dashboard and other interior trim.

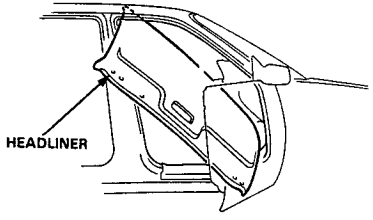

4. Installation is the reverse of the removal procedure.

   NOTE:
   - When inserting the headliner through the door opening, be careful not to fold or bend it. Also, be careful not to scratch the body.
   - Check that both sides of the headliner are securely attached to the trim.
   - When installing the roof trim, install the joint towards the rear.

Seats

Front Seat Replacement

NOTE: Take care not to scratch the front seat covers and body.

1. Remove the mounting bolt covers as shown.
2. Remove the seat mounting bolts and disconnect the connectors, then remove the front seat.
3. Remove the screws, then remove the recline cover. Disconnect the connector.
4. Remove the seat cushion.

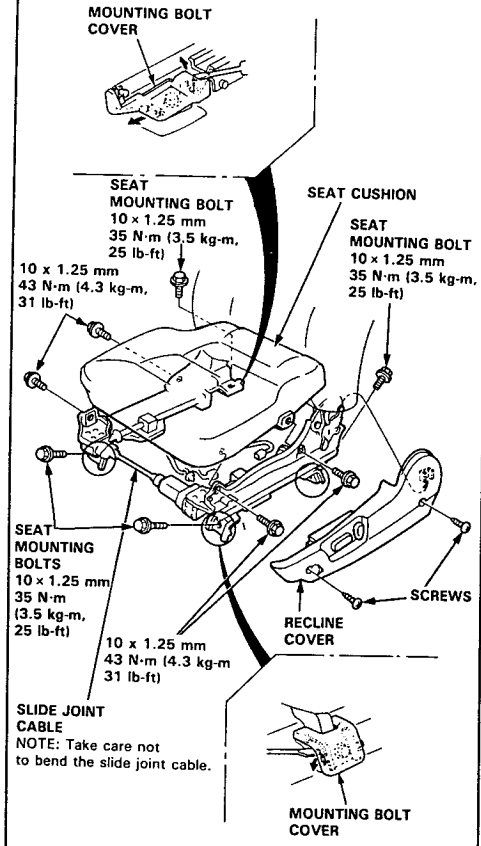

5. Remove the back cover.
   Pull back the seat cover and remove the mounting bolts.
   Remove the pivot nut, then remove the seat-back.

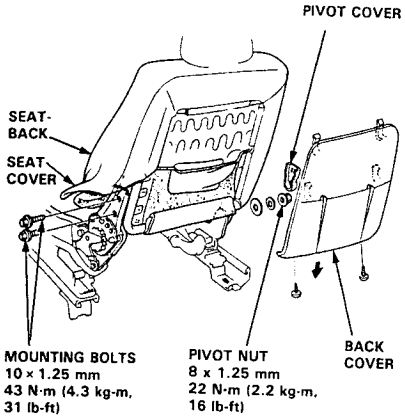

6. Installation is the reverse of the removal procedure.

   NOTE: Before installing the seat-back, make sure the wire harnesses are not pinched.

▶ : Clip locations, 4
▷ : Tie bend locations, 2

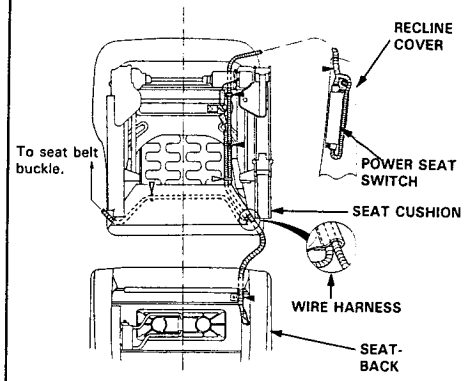

Front Seat Linkage Disassembly

NOTE;
- Apply grease to the moving surface.
- Before installing the front seat linkage, make sure there are no twisted or pinched wire harness.

Bolt torque:
① 22 N·m (2.2 kg-m, 16 ft-lb)
② 5 N·m (0.5 kg-m, 3.6 ft-lb)

Power two-way adjustable:

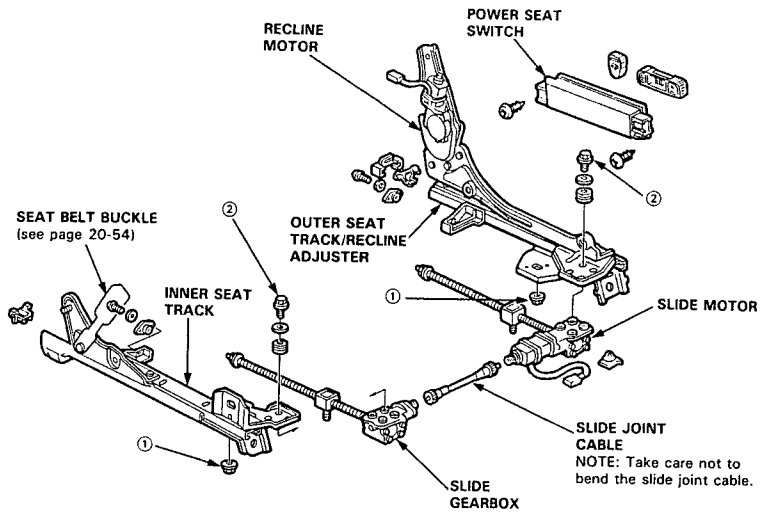

Manually adjustable:

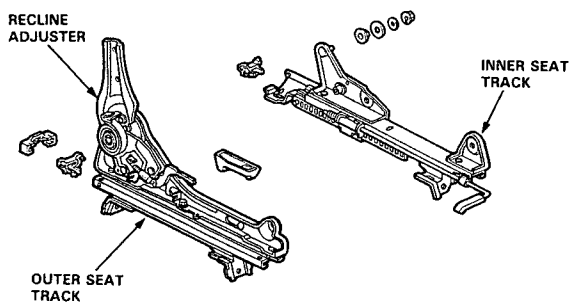

Front Seat Cover Replacement

CAUTION: Wear gloves to remove and install the front seat covers.

NOTE: Take care not to tear the seams or damage the front seat covers.

Seat-back and headrest cover removal:
1. Remove the seat-back (see page 20-49).
2. Remove the lumbar support knob.
3. Loosen the seat-back cover by releasing all the hooks and inside springs.
4. Remove the headrest and headrest guides, then remove the seat-back cover.

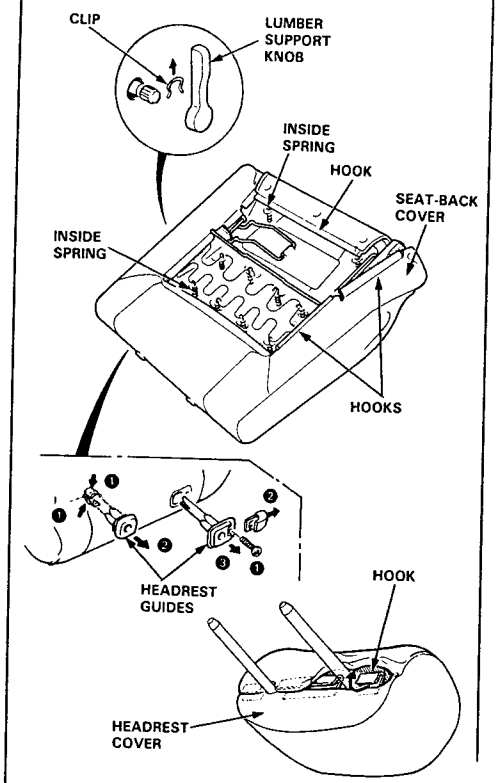

Seat cushion cover removal:
1. Remove the seat cushion (see page 20-49).
2. Remove all hooks and clips from under the seat cushion, then loosen the seat cushion cover. Separate the seat cushion cover and frame.

Clip removal:

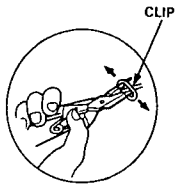

○ : Clip locations, 11

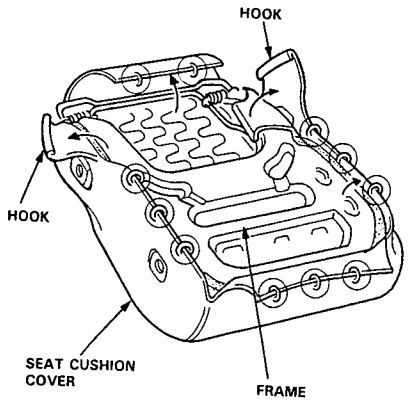

(cont'd)

Front Seat Cover Replacement (cont'd)

3. Pull back the edge of the seat cushion cover all the way around. Release the clips, then separate the seat cushion cover.

○ : Clip locations, 9

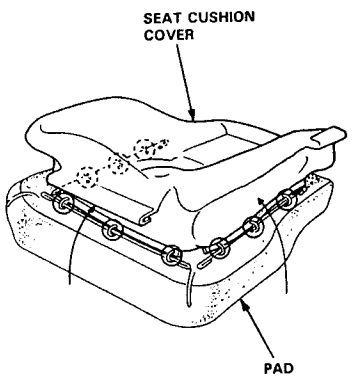

4. Installation is the reverse of the removal procedure.

NOTE:
- To prevent wrinkles when installing a seat cover, make sure the material is stretched every over the pad before securing all the clips.
- Replace the clips with new ones.

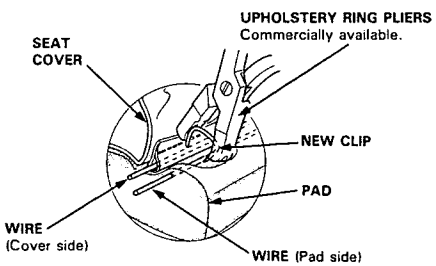

Rear Seat Replacement

Disassemble in the numbered sequence.

NOTE: Take care not to split the seams or damage the rear seat covers.

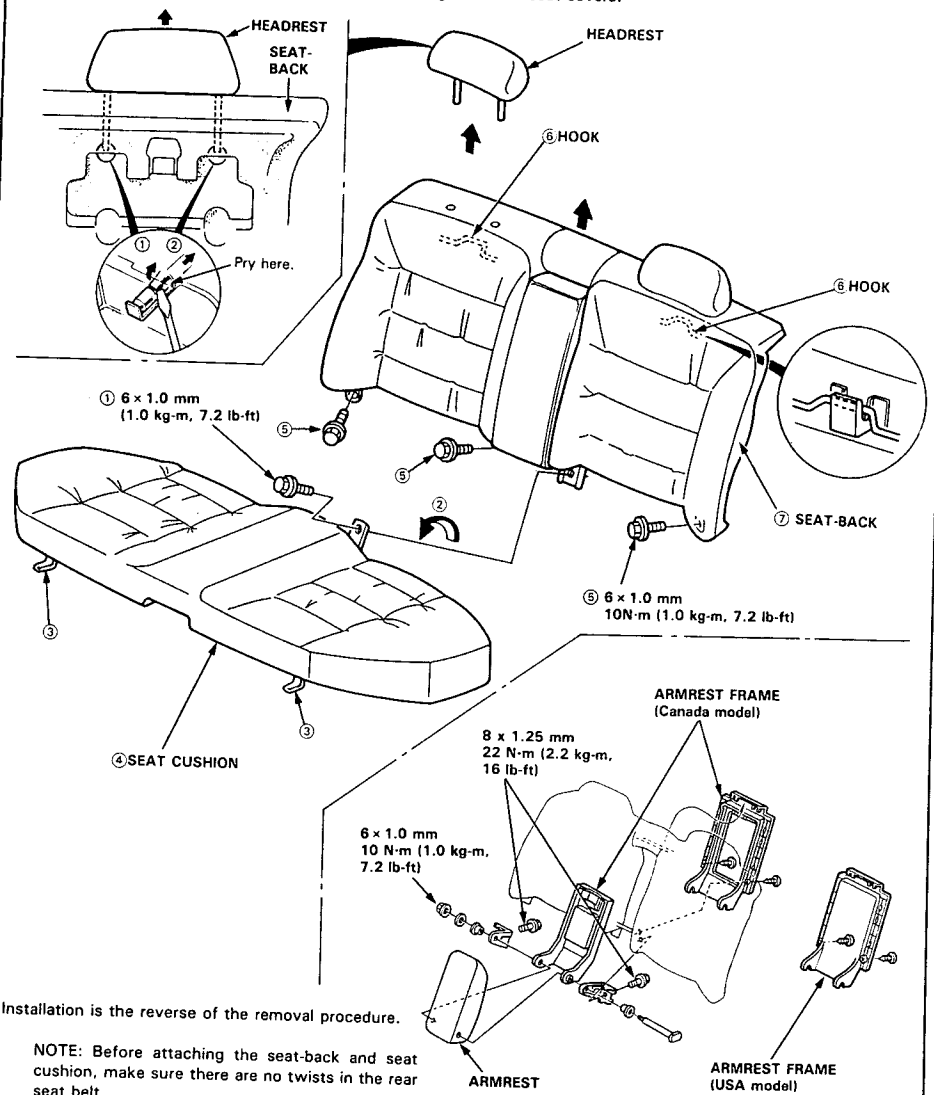

Installation is the reverse of the removal procedure.

NOTE: Before attaching the seat-back and seat cushion, make sure there are no twists in the rear seat belt.

Seat Belts

Front Seat Belt Replacement

CAUTION: Check the front seat belts for damage and replace them if necessary. Be careful not to damage then during removal and installation.

1. Remove the center pillar lower trim (see page 20-47).
2. Remove the upper anchor bolt, lower anchor bolt, retractor bolt, retractor mounting bolt and center anchor bolt, then remove the front seat belt and seat belt buckle.

   NOTE: When removing the upper, lower and center anchor bolts and retractor bolt, use a 17 mm socket or box-end wrench.

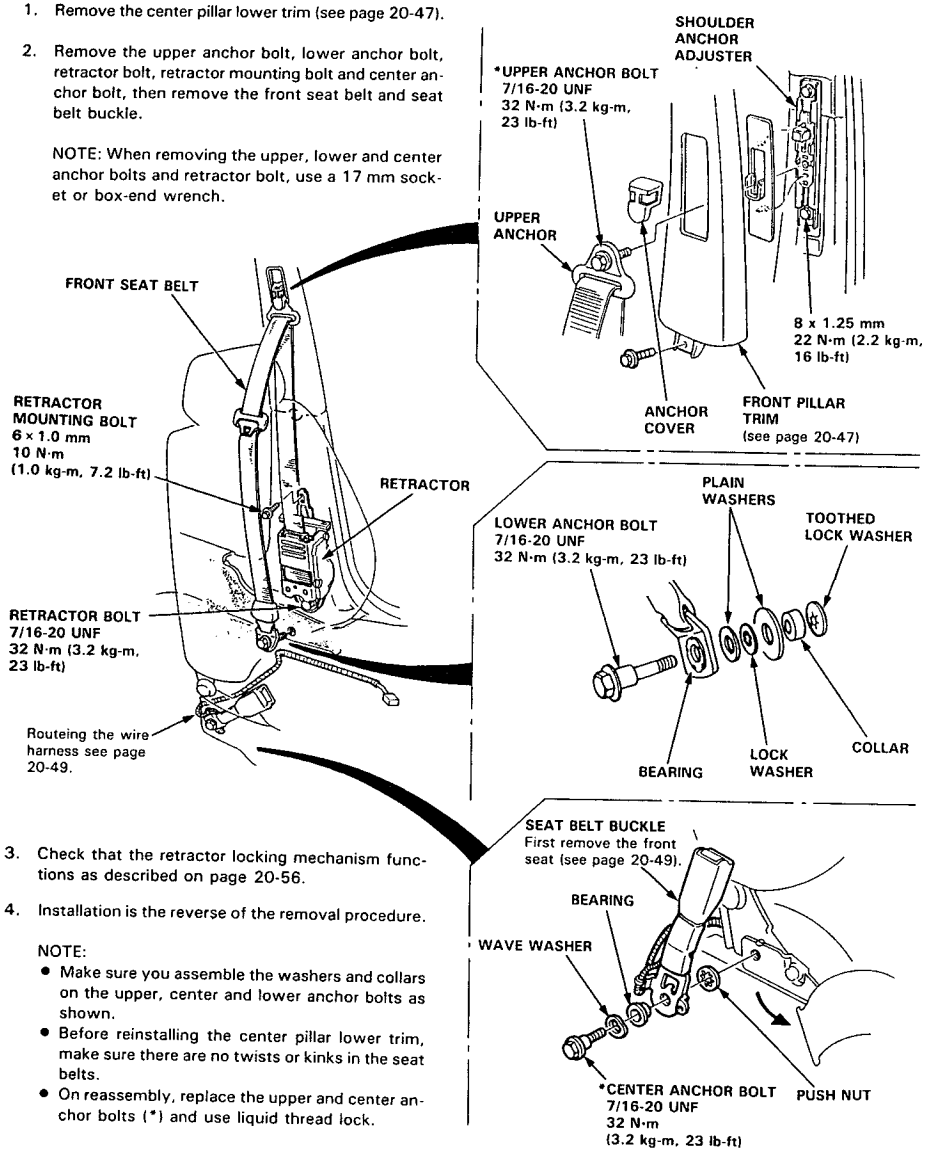

3. Check that the retractor locking mechanism functions as described on page 20-56.
4. Installation is the reverse of the removal procedure.

   NOTE:
   - Make sure you assemble the washers and collars on the upper, center and lower anchor bolts as shown.
   - Before reinstalling the center pillar lower trim, make sure there are no twists or kinks in the seat belts.
   - On reassembly, replace the upper and center anchor bolts (*) and use liquid thread lock.

Rear Seat Belt Replacement

CAUTION: Check the rear seat belts for damage and replace them if necessary. Be careful not to damage them during removal and installation.

1. Remove the rear seat (see page 20-53).
2. Remove the rear shelf (see page 20-47).
3. Remove the lower anchor bolt, retractor bolt, retractor mounting bolt and center anchor bolt, then remove the rear seat belts and seat belt buckles.

   NOTE: When removing the lower and center anchor bolts and retractor bolt, use a 17 mm socket or box-end wrench.

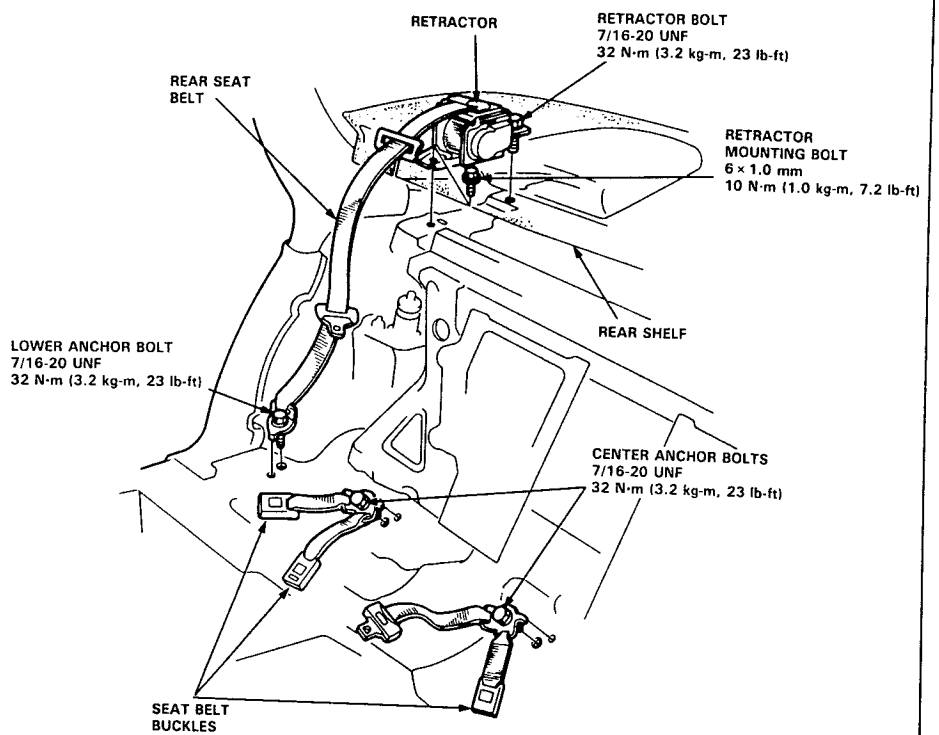

4. Check that the retractor locking mechanism functions as described on page 20-56.
5. Installation is the reverse of the removal procedure.

   NOTE: Before reinstalling the rear seat and rear shelf, make sure there are no twists or kinks in the rear seat belts.

Seat Belts

Inspection

Retractor Inspection

1. Before installing the retractor, check that the belt can be pulled out freely.

2. Make sure that the seat belt does not lock when the retractor is leaned slowly up to 15° from the mounted position. The seat belt should lock when the retractor is leaned over 40°.

   CAUTION: Do not attempt to disassemble the retractor.

Front:

*: Mounted Position

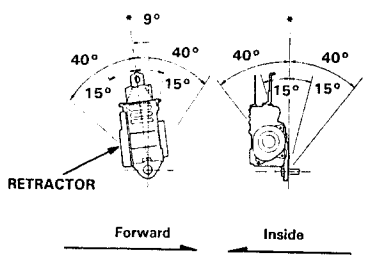

Rear:

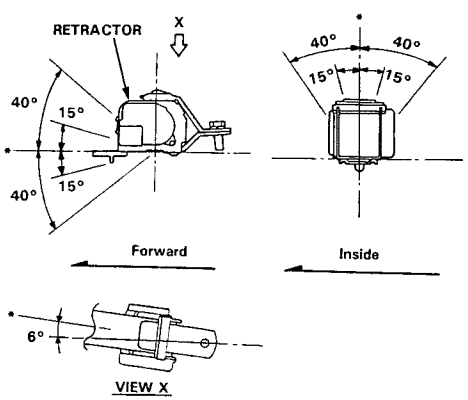

3. Replace the seat belt with a new one if there is any abnormality.

One-the-Car Seat Belt Inspection

1. Check that the seat belt is not twisted or caught on anything.

2. After installing the anchors, check for free movement on the anchor bolts. If necessary, remove the anchor bolts and check that the washers and other parts are not damaged or improperly installed.

3. Check the seat belts for damage or discoloration. Clean with a shop towel if necessary.

   CAUTION: Use only soap and water to clean.

   NOTE: Dirt build-up in the metal loops of the upper anchor can cause the seat belts to retract slowly. Wipe the inside of the loops with a clean cloth dampened in isopropyl alcohol.

4. Check that the seat belt does not lock when pulled out slowly. The seat belt is designed to lock only during a sudden stop or impact.

5. Make sure that the seat belt will retract automatically when released.

6. Replace the seat belt with a new one if there is any abnormality.

Child Seat Anchor Plate

Attachment points are provided for a rear seat mounted child restraint system which uses a top tether.
The attachment points are located on the rear shelf, just behind the rear seat-back.
When using a child seat with a top tether, use a razor blade or sharp knife to carefully cut a 13 mm (0.51 in) diameter circle at the location of the outside attachment points. To use the center tether attachment point, then remove the cap and plate. Install the child seat anchor plate securely.

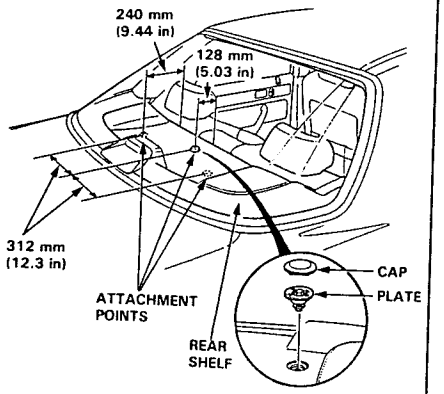

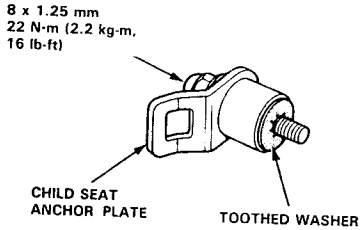

NOTE:
- Do not remove the toothed washer from the child seat anchor plate. Use the child seat anchor plate with the toothed washer attached to it.
- When installing a child seat on the rear seat, follow the instructions of the manufacturer of the child seat.
- Additional anchor plates are available.

⚠ WARNING **Do not use the child seat anchor plate for any other purpose; it is designed exclusively for installation of a child seat.**

Rearview Mirror

Replacement

1. Carefully remove the cover with a flat tip screwdriver.

   CAUTION: When prying with a flat tip screwdriver, wrap it with protective tape to prevent damage.

2. Loosen the lock bolt, then slide the mirror stay from the lug.

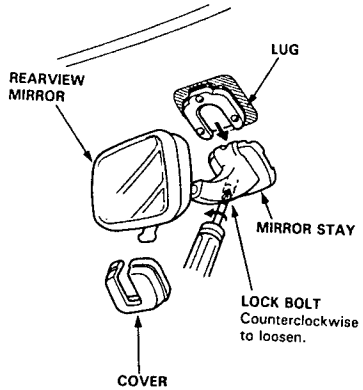

3. Remove the lock bolt, then remove the toothed lock washer and hold spring from the mirror stay.

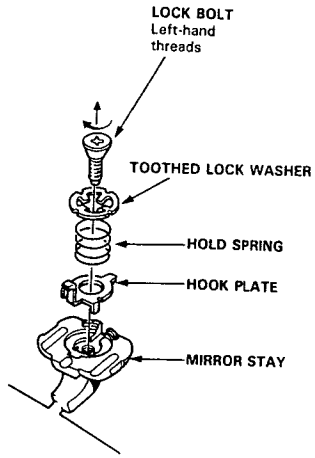

4. Installation is the reverse of the removal procedure.

Carpet

Replacement

SRS wire harnesses are routed near the carpet.

CAUTION:
- **All SRS electrical wiring harnesses are covered with yellow outer insulation.**
- **Before disconnecting the SRS wire harness, install the short connector (s) on the airbag (s).**
- **Replace the entire affected SRS harness assembly if it has an open circuit or damaged wiring.**

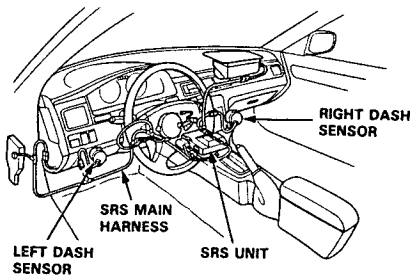

1. Remove:
   - Front seats (see page 20-49)
   - Rear seat-back and rear seat cushion (see page 20-53)
   - Fuse panel and kick panel (see page 20-47)
   - Center console (see page 20-59)
   - Opener cover (see page 20-70)
   - Front seat belt lower anchor (see page 20-54)
   - Front pillar trim (see page 20-47)
   - Door sill moldings (see page 20-47)
   - Footrest and pedal stopper.
2. Pry out the clips at the rear edge and bottom of the center console panel (driver's).
3. Remove the carpet by sliding it rearward.

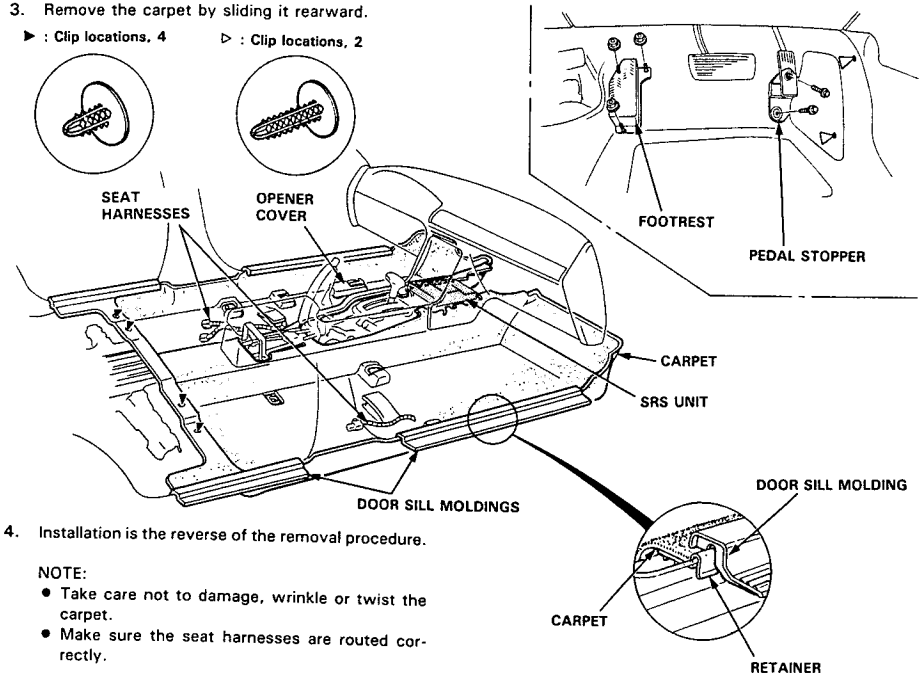

4. Installation is the reverse of the removal procedure.

NOTE:
- Take care not to damage, wrinkle or twist the carpet.
- Make sure the seat harnesses are routed correctly.

Center Console

Replacement

Disassemble in the numbered sequence.

NOTE:
- Lift up the parking brake lever.
- For manual transmission models, remove the shift lever knob.
- Take care not to scratch the center console and dashboard.

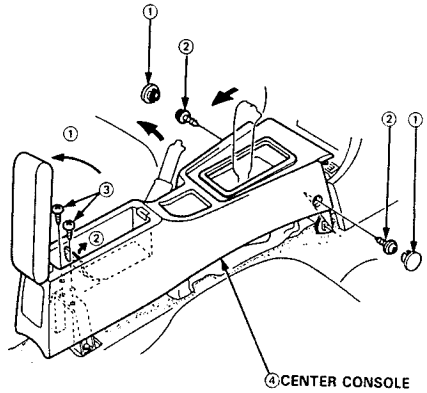

Installation is the reverse of the removal procedure.

Center Console Panel

Replacement

SRS wire harnesses are routed near the center console panel.

CAUTION:
- **All SRS electrical wiring harnesses are covered with yellow outer insulation.**
- **Before disconnecting the SRS wire harness, install the short connector (s) on the airbag (s).**
- **Replace the entire affected SRS harness assembly if it has an open circuit or damaged wiring.**

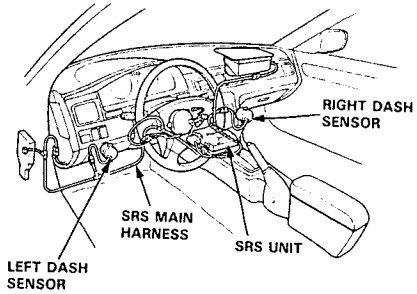

NOTE: The radio may have a coded theft protection circuit. Be sure to get the customer's code number before
- Disconnecting the battery.
- Removing the No. 39 (10 A) fuse in the underhood fuse/relay box.
- Removing the radio.

After service, reconnect power to the radio and turn it on.
When the word "CODE" is displayed, enter the customer's 5-digit code to restore radio operation.

1. Remove the center console.
2. Remove the access cap. Remove the screw, then remove the heater control panel.
3. Remove the ashtray. Remove the screws, then remove the center console panel.
   Disconnect the connectors.

NOTE:
- Take care not to scratch the dashboard and center console panel.
- Do not drop the screws inside the center console panel.

(cont'd)

Center Console Panel

Replacement (cont'd)

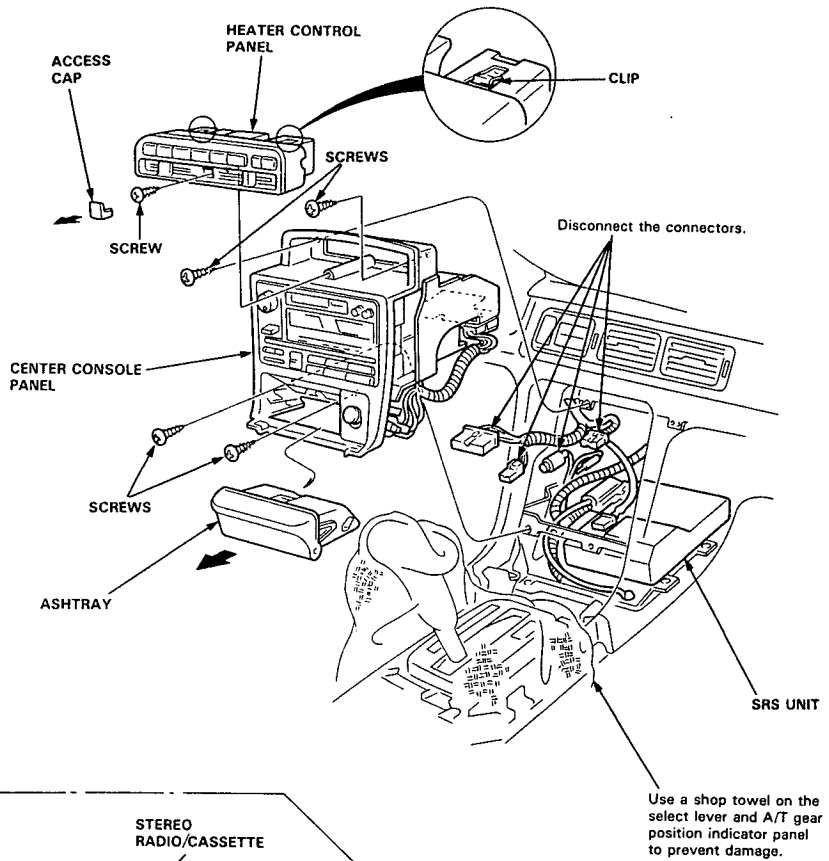

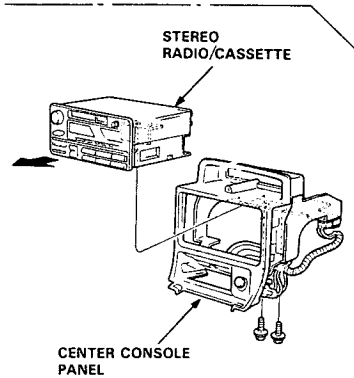

4. Installation is the reverse of the removal procedure.

NOTE: Before tightening the screws, make sure the wire harnesses are not pinched.

Dashboard

Component Removal/Installation

SRS wire harnesses are routed near the dashboard and steering column.

CAUTION:
- **All SRS electrical wiring harnesses are covered with yellow outer insulation.**
- **Before disconnecting the SRS wire harness, install the short connector(s) on the airbag(s).**
- **Replace the entire affected SRS harness assembly if it has an open circuit or damaged wiring.**

NOTE: Take care not to scratch the dashboard and related parts.

CAUTION: When prying with a flat tip screwdriver, wrap it with protective tape to prevent damage.

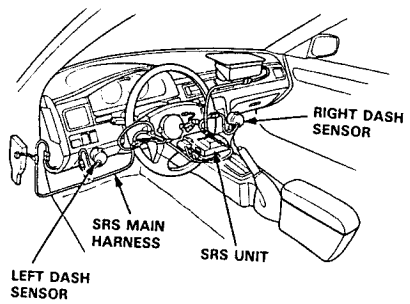

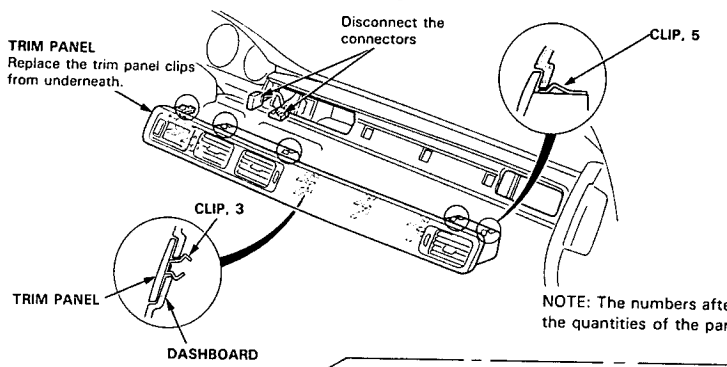

NOTE: The numbers after the part names show the quantities of the parts used.

Passenger's:

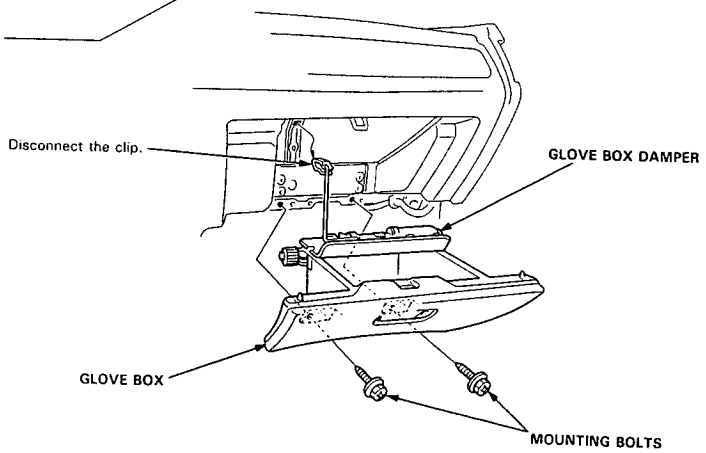

(cont'd)

Dashboard

Component Removal/Installation (cont'd)

Disassemble in the numbered sequence.

Driver's:

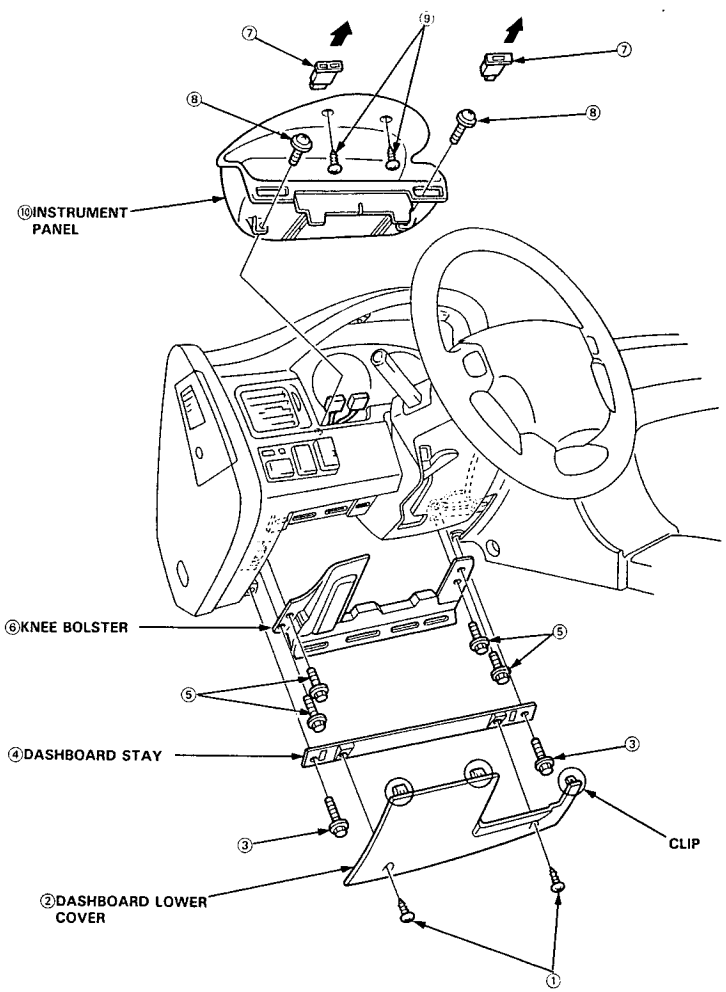

Installation is the reverse of the removal procedure.

NOTE: Take care not to scratch the dashboard.

Replacement

SRS wire harnesses are routed near the dashboard and steering column.

CAUTION:
- **All SRS electrical wiring harnesses are covered with yellow outer insulation.**
- **Before disconnecting the SRS wire harness, install the short connector (s) on the airbag (s).**
- **Replace the entire affected SRS harness assembly if it has an open circuit or damaged wiring.**

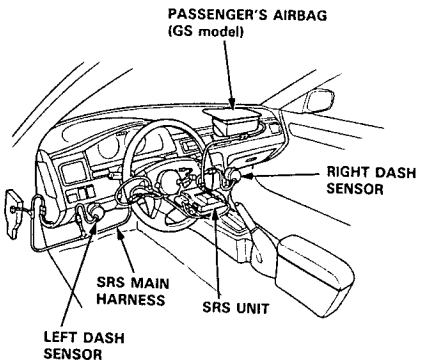

1. To remove the dashboard, first remove the:
   - Front seats (see page 20-49)
   - Center console (see page 20-59)
   - Center console panel (see page 20-59)
   - Dashboard lower cover (see page 20-62)
   - Knee bolster (see page 20-62)
   - Glove box (see page 20-61)
   - Air conditioner duct (see page 20-64)
   - Kick panel (see page 22-47)

   NOTE: The radio may have a coded theft protection cirucit. Be sure to get the customer's code number before
   —Disconnecting the battery.
   —Removing the No. 39 (10A) fuse in the under-hood fuse/relay box.
   —Removin the radio.
   After service, reconnect power to the radio and turn it on.
   When the word "CODE" is displayed, enter the customer's 5-digit code to restore radio operation.

2. Lower the steering column (see section 17).

   ⚠WARNING To avoid accidental deployment and possible injury always install the short connector(s) on the airbag(s) connector when the SRS wire harness is disconnected.

   NOTE: Before lowering the steering column, remove the access panel, then disconnect the connector between the cable reel and airbag. Connect the short connector (RED) to the airbag connector (see section 23).

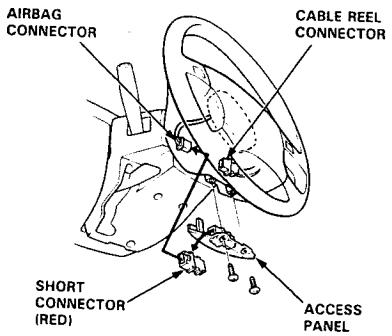

(cont'd)

Dashboard

Replacement (cont'd)

NOTE: To prevent damage to the steering column, wrap it with a shop towel.

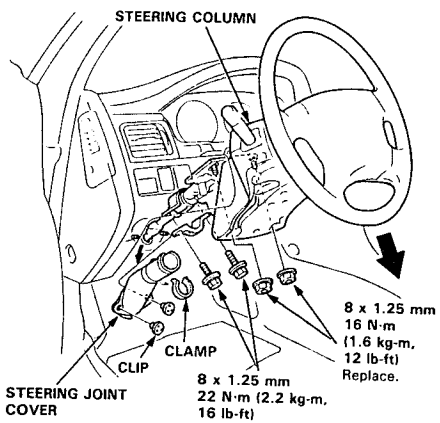

3. Passenger's: Remove the nuts, then remove the air-bag bracket (GS model).

⚠WARNING To avoid accidental deployment and possible injury, always install the short connector on the airbag connector when the SRS wire harness is disconnected.

NOTE: Disconnect the connector between the passenger's airbag and SRS wire harness. Connect the short connector (RED) to the airbag connector (see section 23).

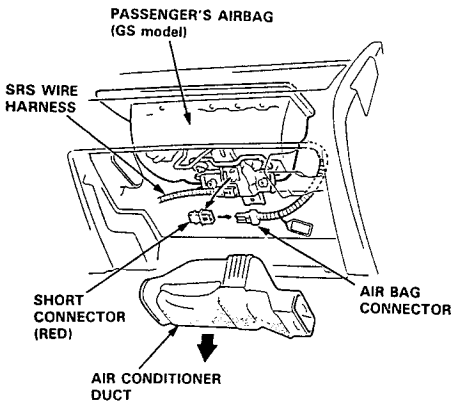

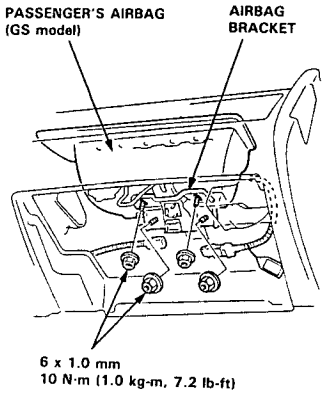

4. Remove the screws, then remove the side air vents from each side of the dashboard.

5. Disconnect the connectors.

6. Remove the dashboard mounting bolts, then lift and remove the dashboard.

CAUTION:
- **Use protective tape on the bottom of the front pillar trim.**
- **To prevent damage to the shift lever (M/T) or selecter lever and A/T gear position indicator panel (A/T), wrap then with a shop towel.**

NOTE: Take care not to scratch the dashboard.

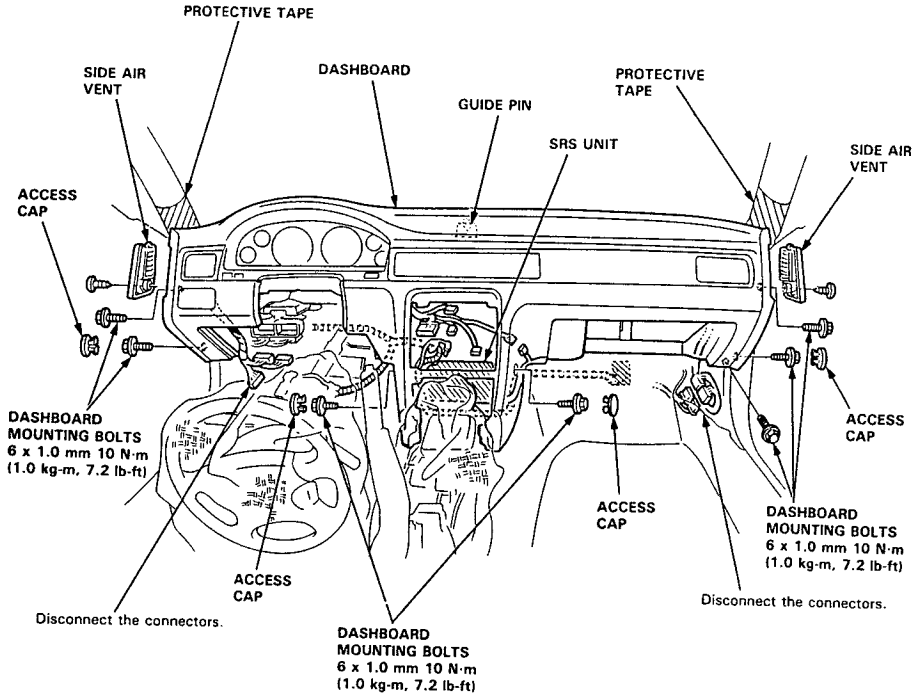

7. Installation is the reverse of the removal procedure.

NOTE:
- Make sure the dashboard fits onto the guide pin correctly.
- Before tighting the dashboard mounting bolts, make sure the dashboard wire harnesses are not pinched.

Bumpers

Front Bumper Replacement

CAUTION: Wear gloves to remove and install the front bumper.

1. Remove the screws, then remove the right and left front turn signal lights and disconnect the connectors.
2. Remove the two bumper mounting screws on each side at the corner edge of the bumper.
3. Remove the two lower skirt mounting bolts and four lower skirt mounting screws.
4. Remove the two bumper mounting nuts from the engine compartment side.
5. Remove the access caps and two bumper mounting bolts on each side.
6. Remove the front bumper by sliding it forward.

   NOTE:
   - An assistant is helpful when removing the front bumper.
   - Take care not to scratch the front bumper.

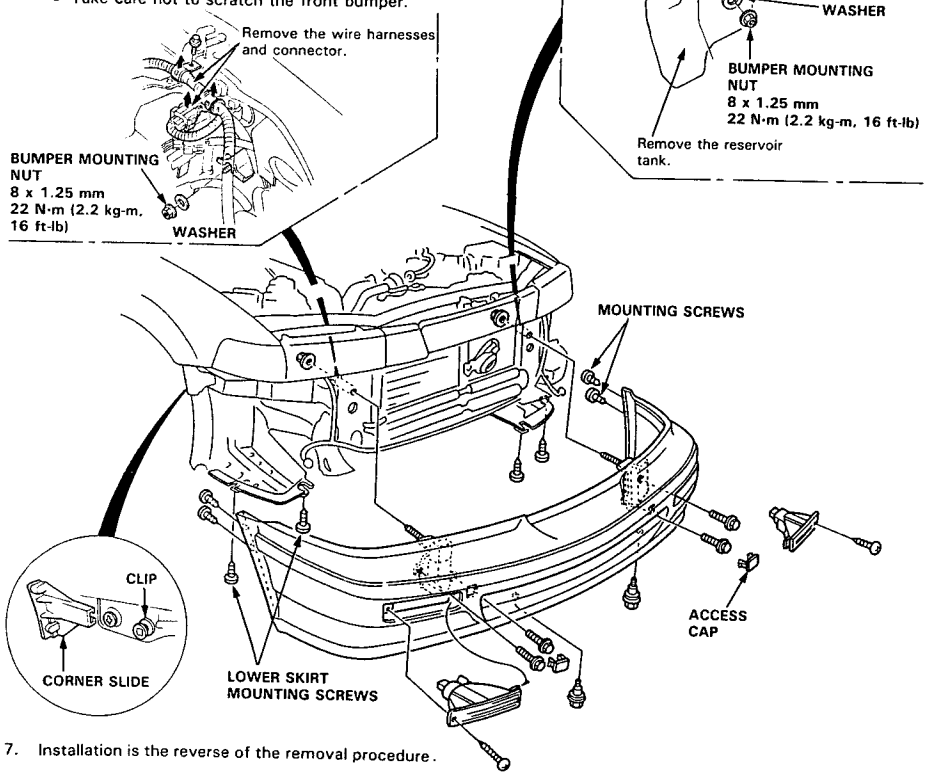

7. Installation is the reverse of the removal procedure.

Rear Bumper Replacement

CAUTION: Wear gloves to remove and install the rear bumper.

1. Pry off the access caps, then remove the two upper bumper mounting nuts on each side from the trunk area.
2. Remove the two bumper mounting screws at the front edge of the bumper on each side.
3. Remove the two lower bumper mounting nuts and center clip from under the trunk floor.
4. Pull back the front edge of the rear bumper on each side, then remove the rear bumper by sliding it backward.

   NOTE:
   - Disconnect the license light connector.
   - An assistant is helpful when removing the rear bumper.
   - Take care not to scratch the rear bumper.

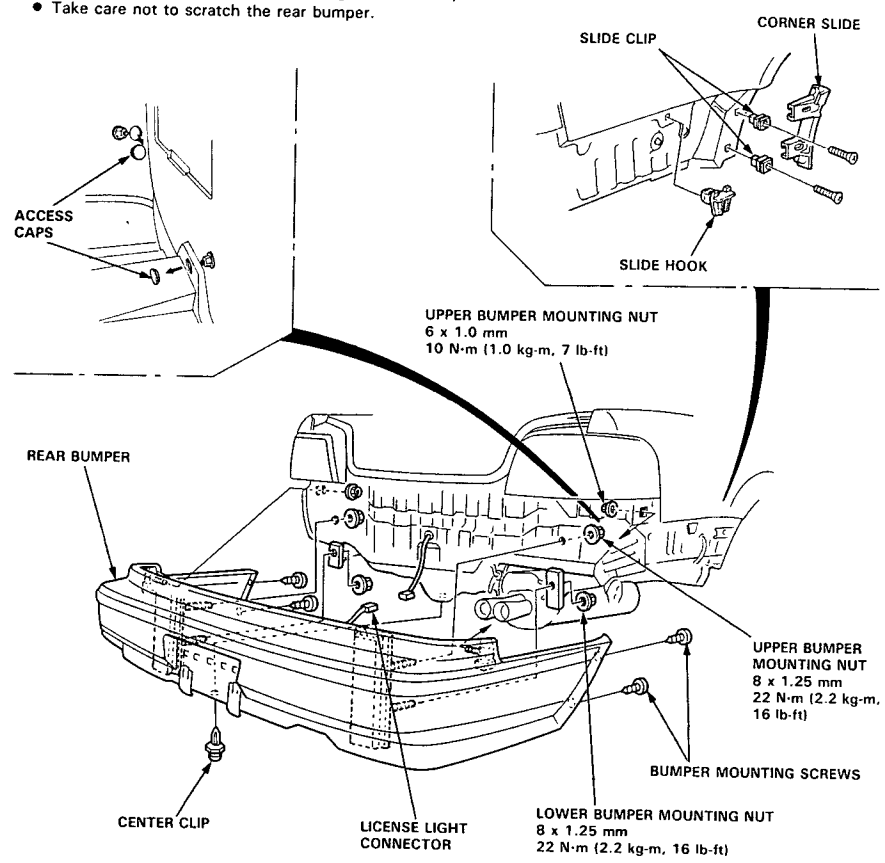

5. Installation is the reverse of the removal procedure.

Hood/Opener and Latch

Replacement/Adjustment

●: Clip locations, 21 ▶: Clip locations, 6

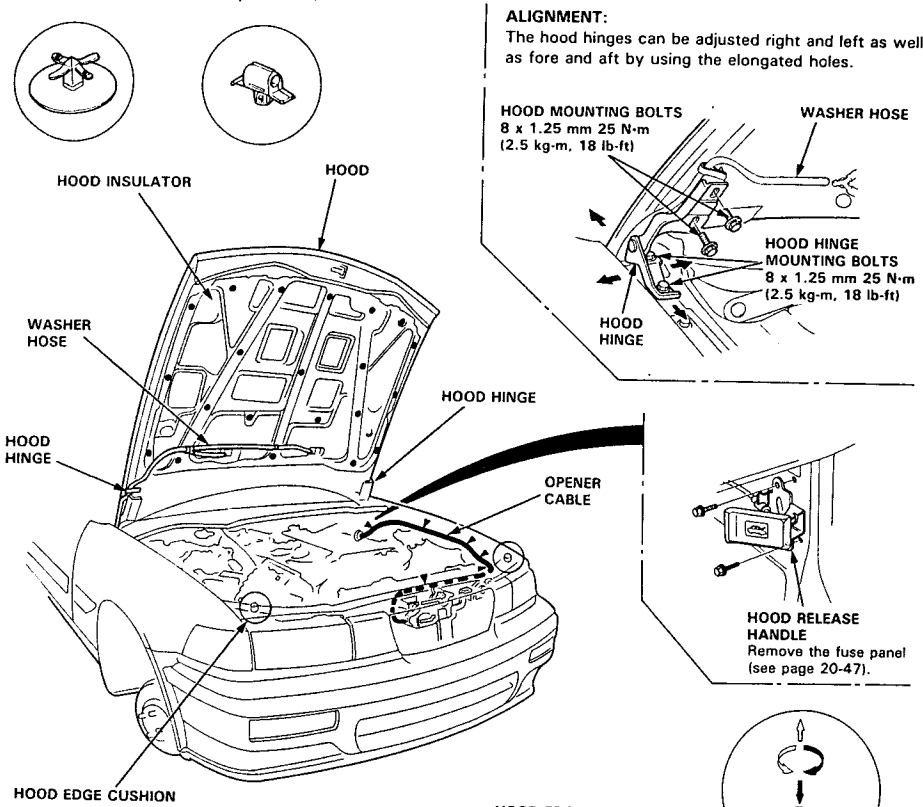

ALIGNMENT:
The hood hinges can be adjusted right and left as well as fore and aft by using the elongated holes.

HOOD RELEASE HANDLE
Remove the fuse panel (see page 20-47).

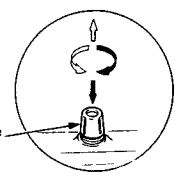

HOOD EDGE CUSHION
Turn as necessary to make the hood fit flush with the body at front and side edges.

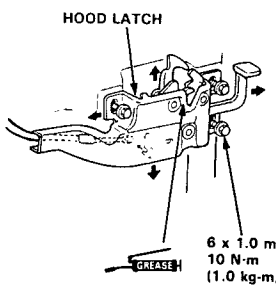

NOTE:
- Before pulling out the opener cable, tie a string to the cable so you can pull it back in later.
- Take care not to bend the opener cable.

Installation is the reverse of the removal procedure.

NOTE:
- After installing, check that the opener cable is routed and connected properly.
- After installing, adjust the hood alignment.

Trunk Lid

Replacement/Adjustment

1. Pull the wire harness and trunk lid opener cable out of the trunk lid.

   NOTE: Before pulling out the wire harness, tie a string to the end of it so you can pull it back in when the trunk lid is reinstalled.

2. Remove the trunk lid mounting bolts, then lift off the lid.
3. Remove the torsion bar using an torsion bar assembly tool.
4. Remove the rear shelf (see page 20-47).
5. Remove the hinge mounting bolts, then remove the hinges.
6. Installation is the reverse of the removal procedure.

NOTE: Before tightening the mounting bolts, check the adjustments shown below:

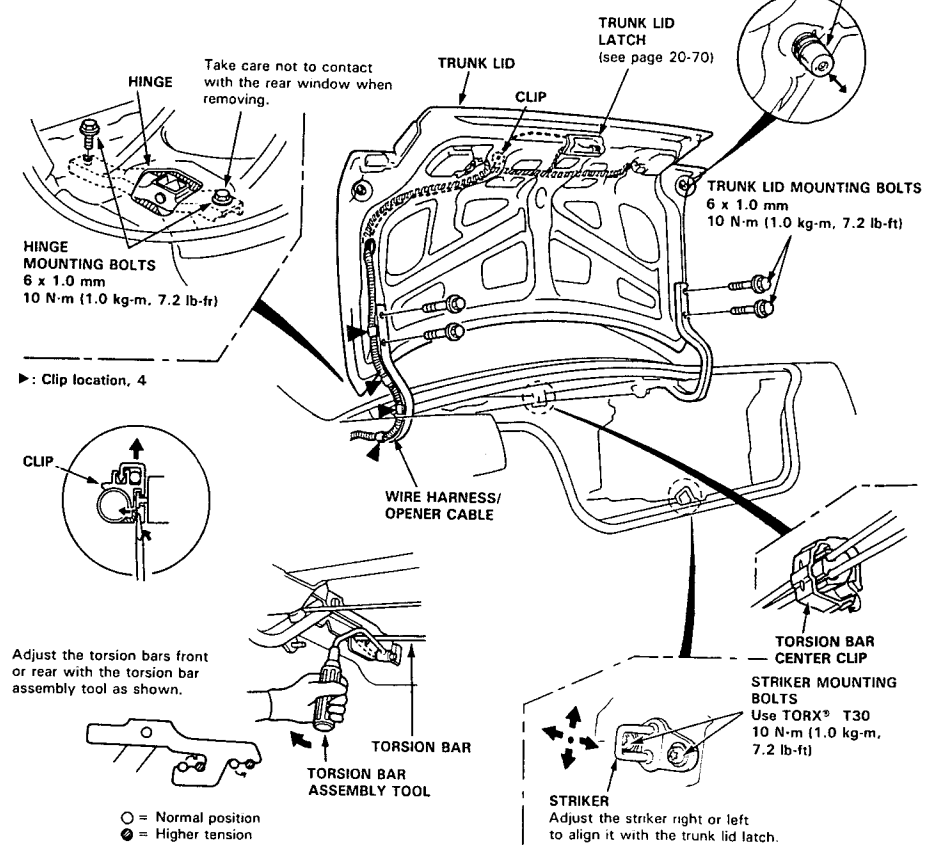

Trunk Lid Latch/Fuel Lid Latch/Opener

Replacement

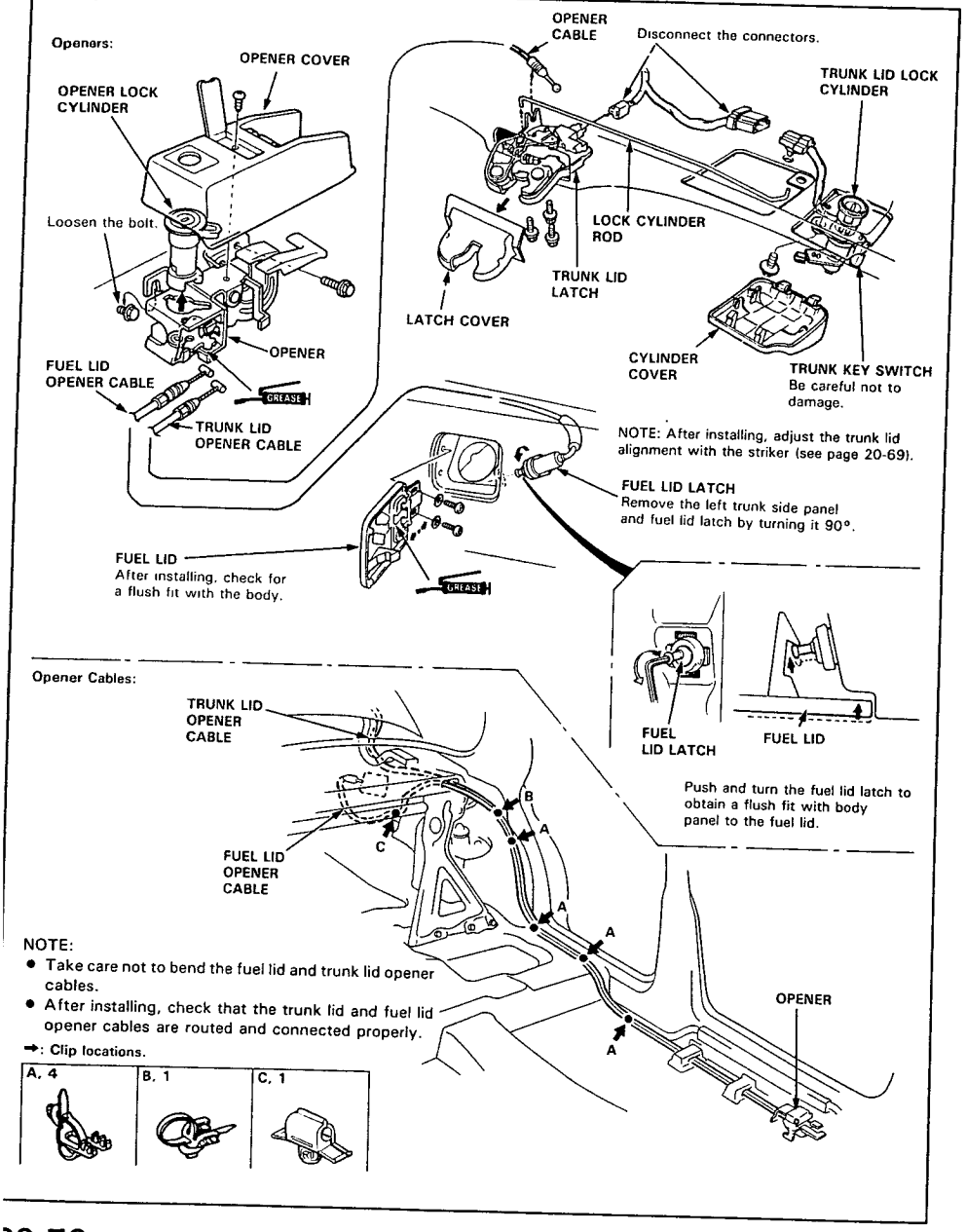

Front and Center Pillar Retainers/Weatherstrip

Replacement

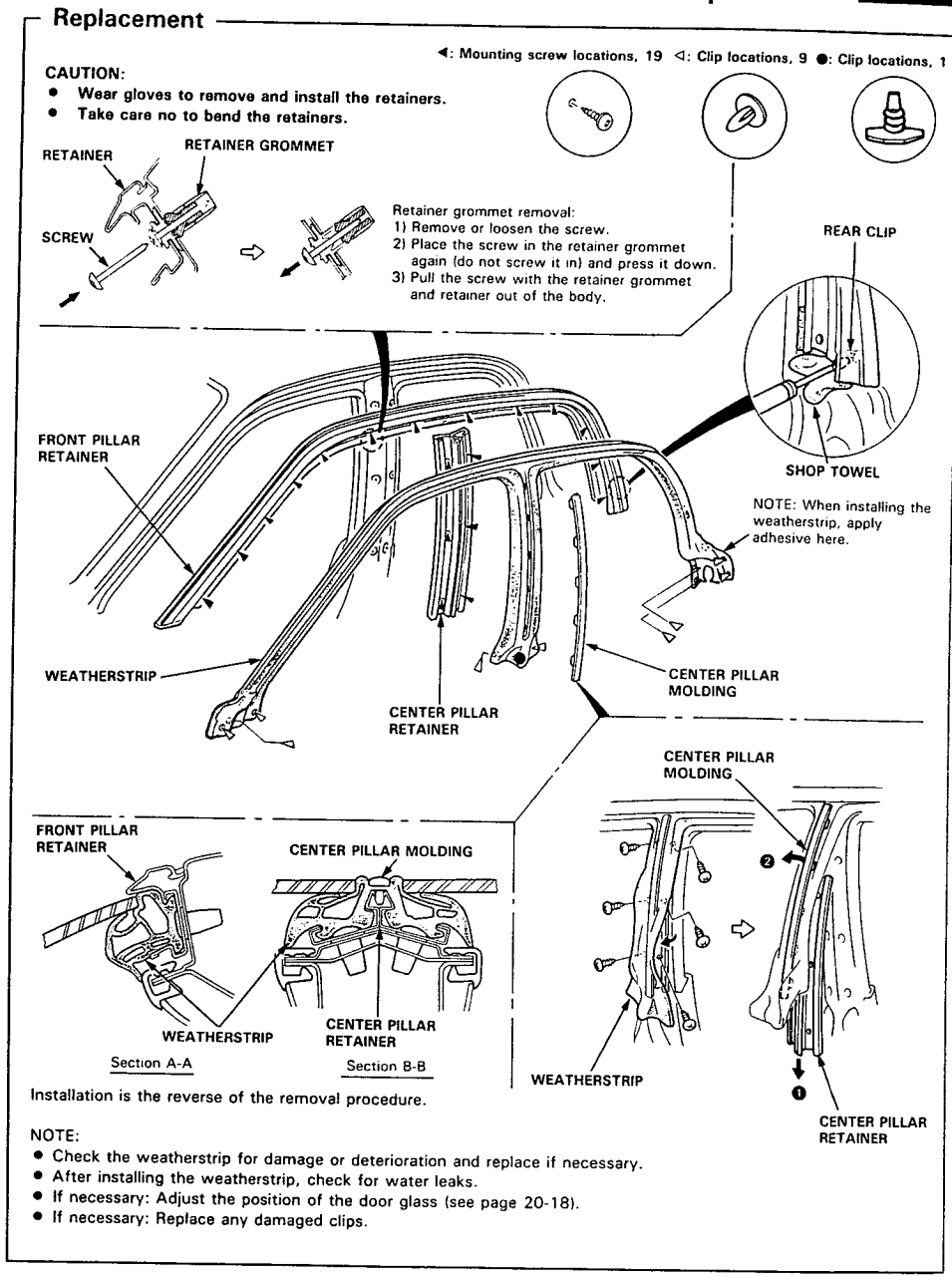

Installation is the reverse of the removal procedure.

NOTE:
- Check the weatherstrip for damage or deterioration and replace if necessary.
- After installing the weatherstrip, check for water leaks.
- If necessary: Adjust the position of the door glass (see page 20-18).
- If necessary: Replace any damaged clips.

Front Grille/Side Sill Panel

Front Grille Replacement

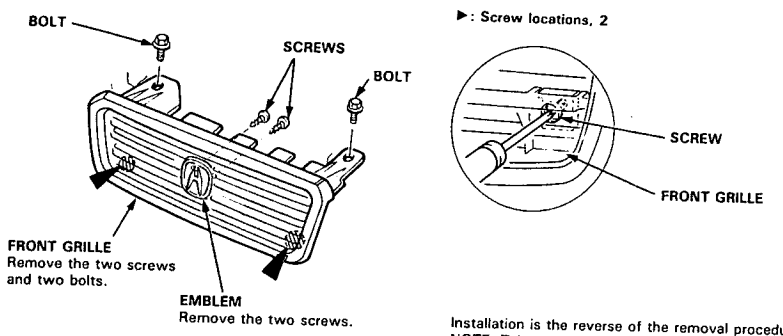

Installation is the reverse of the removal procedure.
NOTE: Take care not to scratch the front grille.

Side Sill Panel Replacement

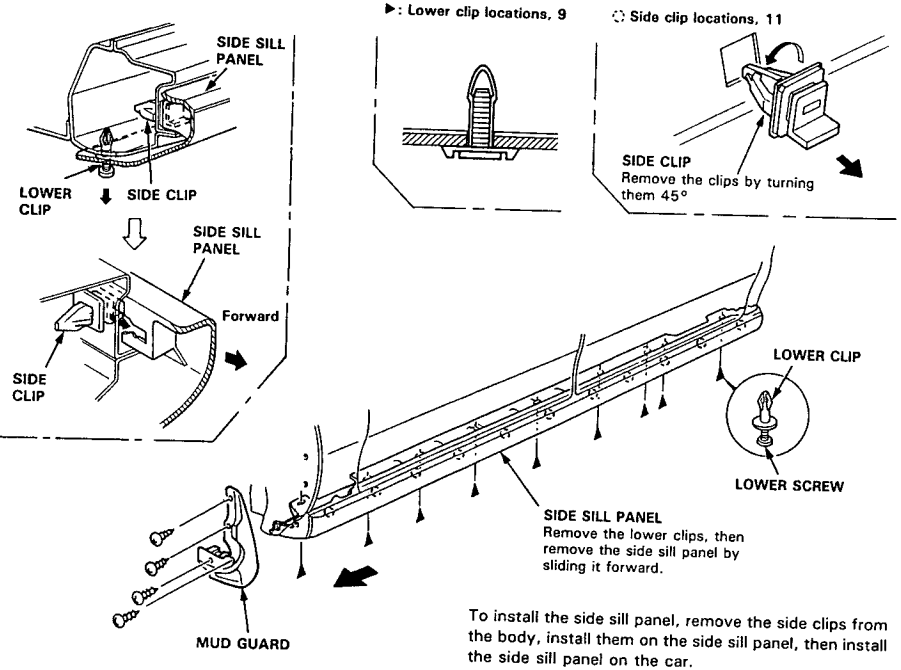

To install the side sill panel, remove the side clips from the body, install them on the side sill panel, then install the side sill panel on the car.

NOTE:
- Take care not to twist the side sill panel.
- If necessary, replace any damaged side and lower clips.

Side and Door Moldings/Fender Well Trim

Replacement

NOTE:
- To remove the door molding, remove the door panel and plastic cover (see pages 20-3, 4, 12).
- Take care not to bend the side and door moldings.
- See replacement procedures beginning on page 20-74.

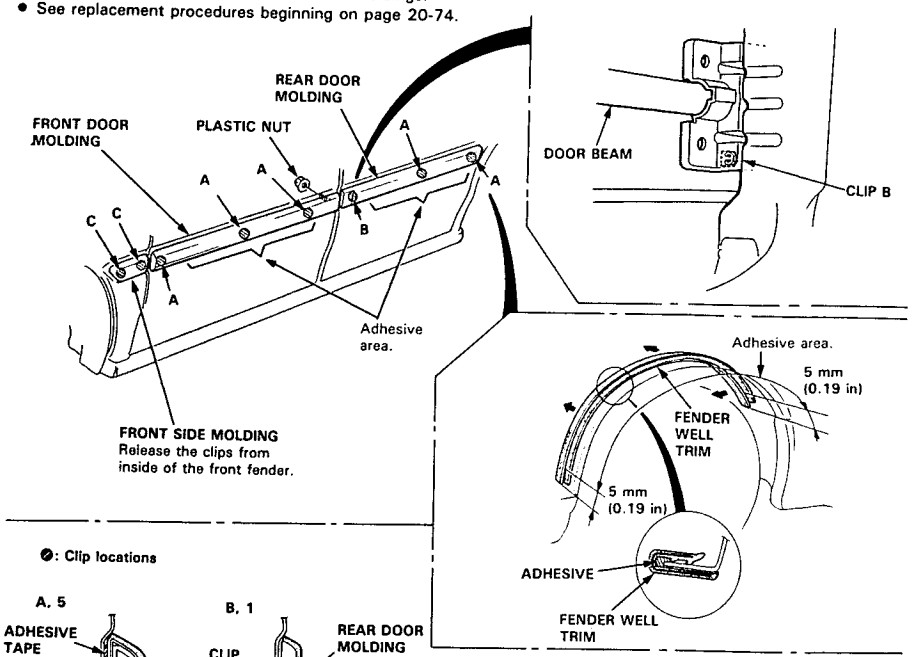

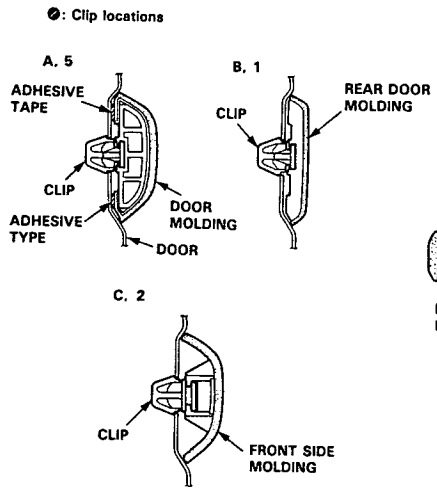

Installation is the reverse of the removal procedure.

NOTE: If necessary, replace any damaged clips.

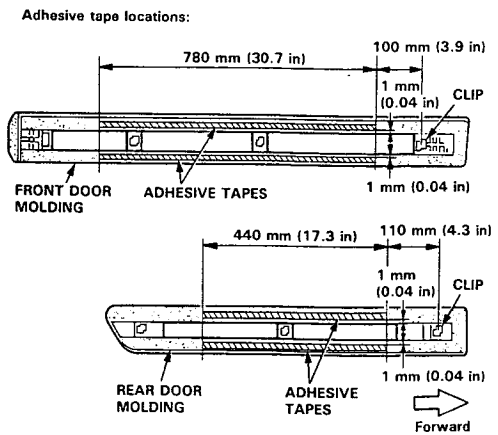

(cont'd)

Side and Door Moldings/Fender Well Trim

Replacement (cont'd)

The following materials and tools are required to repair the door moldings.

NOTE: Follow the manufacturer's instructions.

Materials: (Reference.)
- Stripe remover
  3M 08907
- Stripe adhesive remover
  3M 08908
- Adhesive tape
  3M Super Automotive Attachment Tape

Tools:
- Protective tape
- Knife or cutter
- Sponge or shop towel
- Infrared dryer
- Film
- Putty knife
- Alcohol

CAUTION: Wear gloves to remove and install the door moldings.

Door molding removal:

1. Remove the door panel and plastic cover (see pages 20-3, 4, 12).
2. Apply protective tape on and around the door molding.

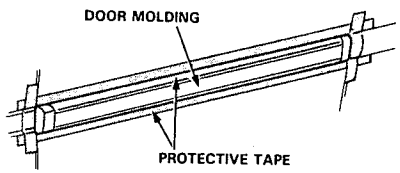

3. Release the clips from inside of the door.
   Carefully cut the adhesive tape with a knife or cutter while pulling the edge of the door molding away from the door as shown.

   NOTE: Take care not to scratch or bend the door molding.

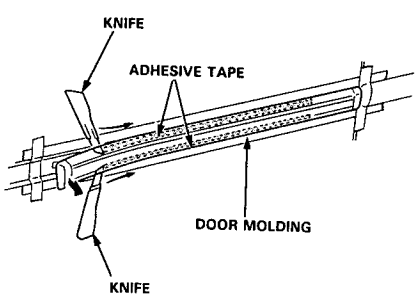

Adhesive tape residue removal:

4. Apply the stripe remover evenly to the bonding surface of the door.

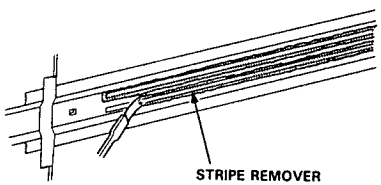

5. Cover the bonding surface of the door with a film, then heat to 104–122°F (40–50°C) for 5–10 minutes with a infrared dryer.
   NOTE: Use care when heating to prevent deformation of the door.

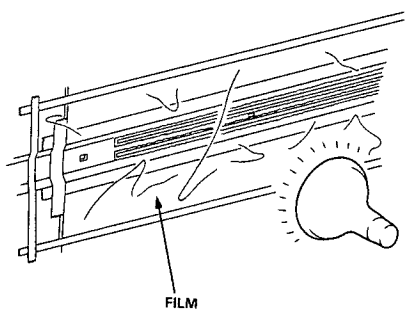

6. Scrape the adhesive tape with a putty knife.

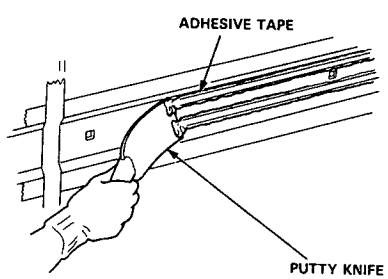

7. For removal of adhesive tape residue, follow-up with stripe adhesive remover, then scrape the adhesive tape with a putty knife.

8. Peel off the protective tape, then clean the bonding surface with a sponge dampened in alcohol.
   NOTE: Make sure the bonding surface is kept free of water, oil and grease.

9. Remove the clips from the door molding.
   NOTE: If necessary, replace any damaged clips.

10. Apply the stripe remover evenly to the bonding surface of the door molding.

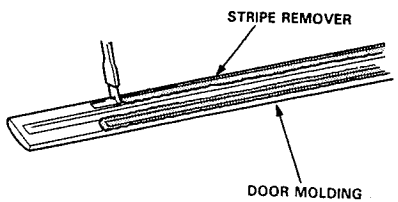

(cont'd)

Replacement (cont'd)

11. Wrap the door molding with film, then heat to 104–122°F (40–50°C) for 5–10 minutes with a infrared dryer.
    NOTE: Use care when heating to prevent deformation of the door molding.

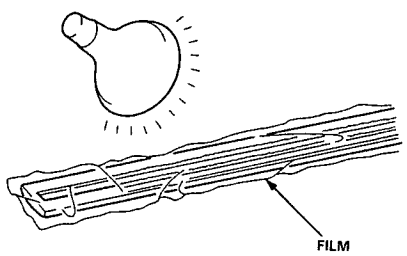

12. Scrape the adhesive tape with a putty knife.

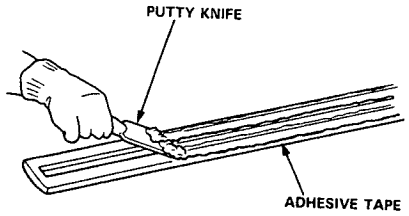

13. For removal of adhesive tape residue, follow-up with stripe adhesive remover, then scrape the adhesive tape with a putty knife.

14. Peel off the protective tape, then clean the door molding with a sponge dampened in alcohol.

    NOTE: Make sure the bounding surface is kept free of water, oil and grease.

Door molding installation:

15. Glue the new adhesive tape to the door moldings (see page 20-73).

16. Install the clips on the door molding.

17. Heat the bonding surface of the door and door molding with a infrared dryer.
    Door: 104°–140°F (40–60°C)
    Molding: 68–86°F (20–30°C)

    NOTE: Use care when heating to prevent deformation of the door molding.

18. Align the door molding with the clip locations and set the door molding. Lightly push on the door molding until its edge is fully seated on the adhesive tape.

    NOTE: Do not spray water on the molding within the first 24 hours after installation.

19. Reassemble all removed parts.

Sub-frame Torque Sequence:

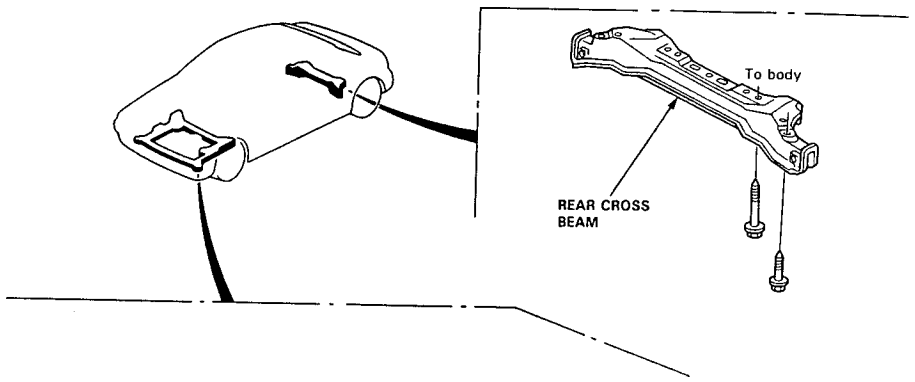

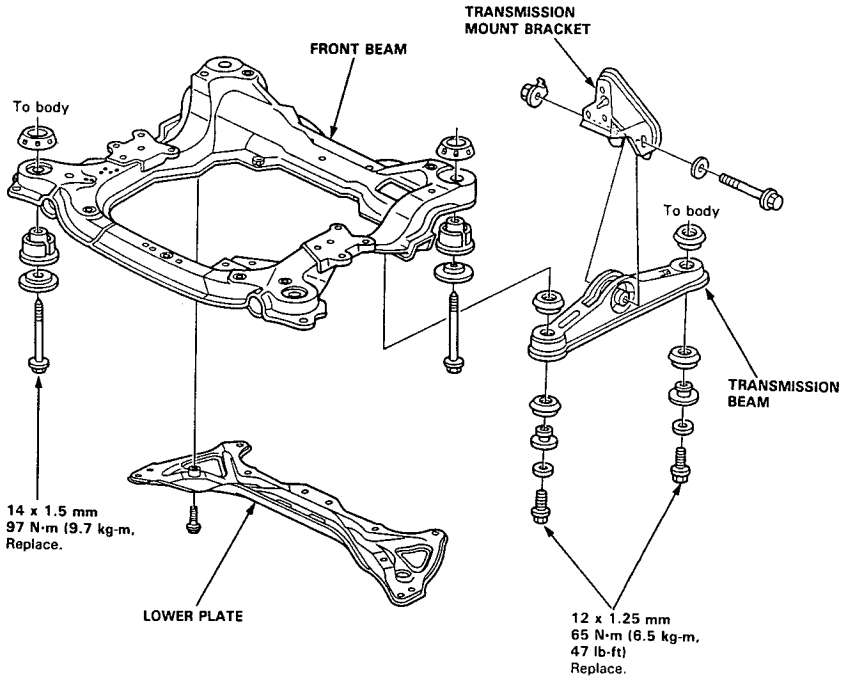

Frame Repair Chart

Unit: mm (in)

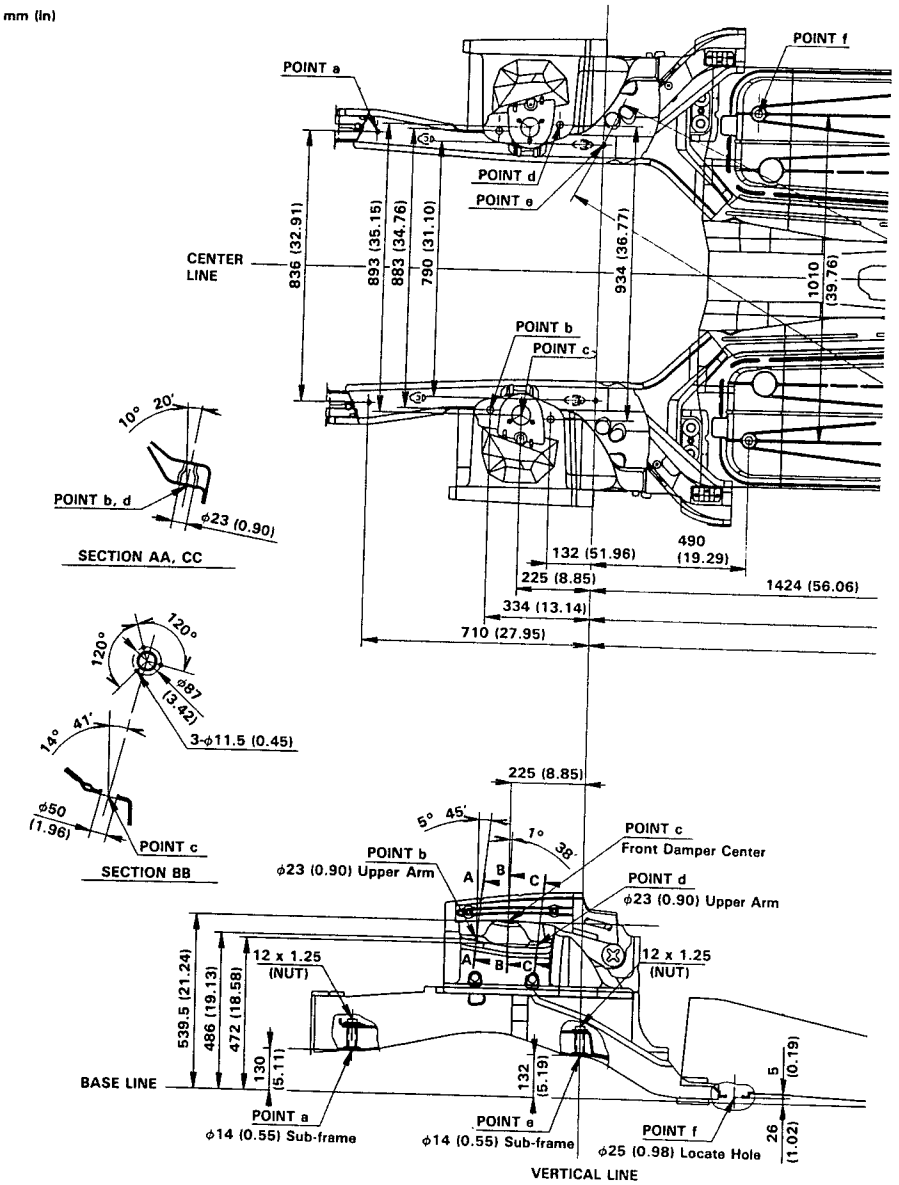

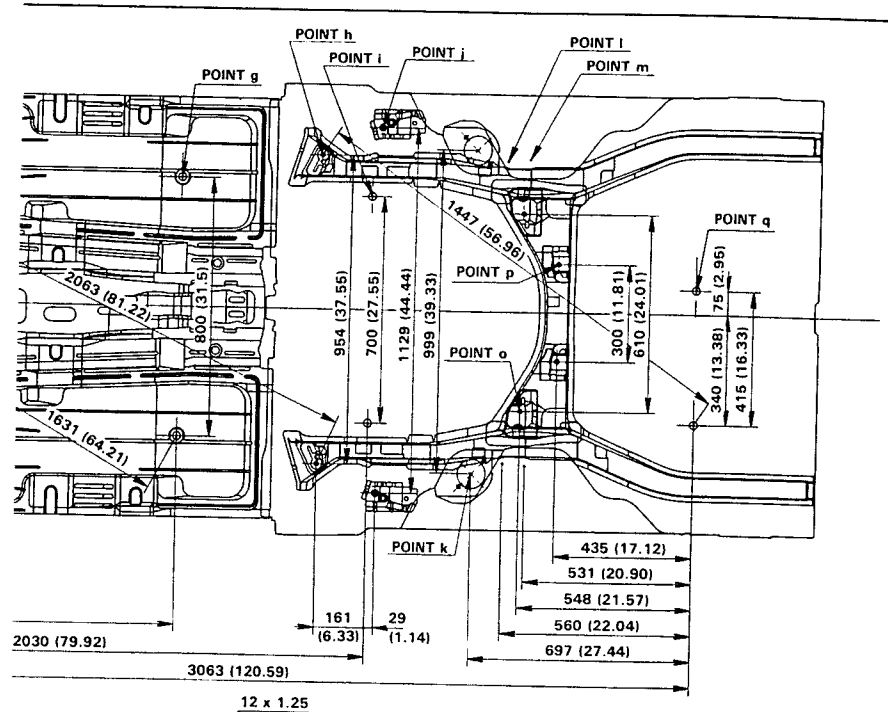

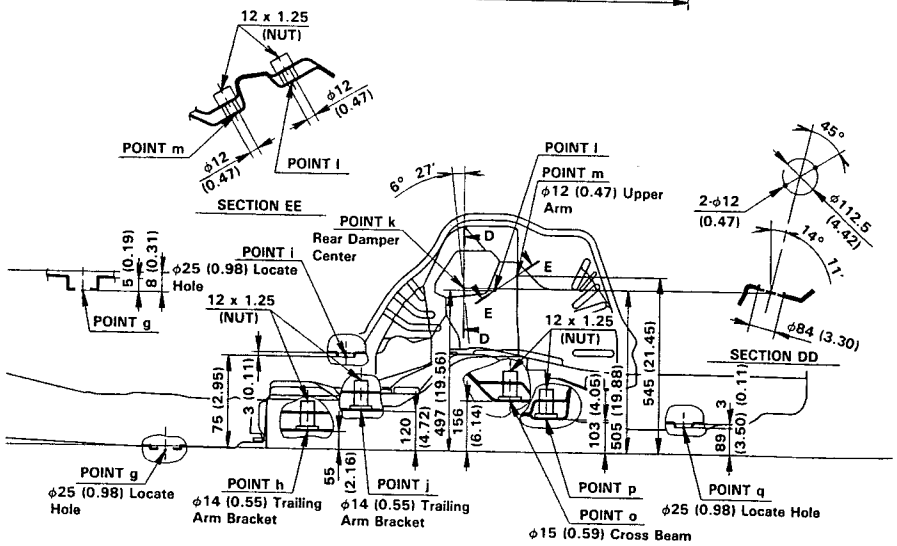

Heater and Air Conditioning

Heater **21-1**

This vehicle has a compact heater assembly with the heater and evaporator together.
Also refer to 22 section (Air Conditioning).

Air Conditioning **22-1**

Section 21 -
All information
in Section 22

Air Conditioning

Special Tools 22-2
Illustrated Index 22-3
Wiring/Connector Locations
  Engine Compartment 22-4
  Heater-Evaporator Unit 22-5
Heater-Evaporator Door Positions 22-6
Circuit Diagram 22-8
Description
  Outline 22-10
Troubleshooting
  Self-diagnosis Circuit Check 22-11
  Reference Chart 22-12
  Heater Control Panel Input/
    Output Signals 22-13
  Heater Control AMP Input/
    Output Signals 22-14
  Radiator Fan Control Module
    Test 22-15

  Evaporator Temperature Sensor 22-16
  Air Mix Control Motor 22-18
  Mode Control Motor 22-20
  Recirculation Control Motor 22-22
  Blower Motor 22-24
  Blower Motor Relay 22-26
  Blower Motor Speed 22-28
  Blower Motor Top Speed 22-32
  Power Circuits to Heater Control
    AMP 22-34
  Radiator Fan 22-35
  Condenser Fan 22-38
  Engine Coolant Temperature (ECT)
    Switch A 22-41
  Both Fans 22-42
  Compressor 22-44
  A/C System 22-46
Heater Control Panel
  Removal 22-49
*Heater-Evaporator Unit
  Replacement 22-50
Blower Motor
  Replacement 22-52
Heater Core
  Replacement 22-54
Evaporator
  Replacement 22-56
Evaporator Temperatur Sensor
  Removal 22-58
  Test 22-58
Air Mix Control Motor
  Removal 22-59
  Test 22-59
Mode Control Motor
  Removal 22-60
  Test 22-60
Recirculation Control Motor
  Removal 22-62
  Test 22-62
Heater-Evaporator Door
  Adjustment 22-63
Relay
  Test 22-64
Heater Valve
  Test 22-64
A/C Service Tips and Precautions 22-65
A/C System Service
  Recovery 22-66
  Performance Test 22-67
  Pressure Test Chart 22-68
Compressor
  Description 22-69
  Illustrated Index 22-70
  Replacement 22-71
  Clutch Inspection 22-73
  Clutch Overhall 22-74
  Relief Valve Replacement 22-75
Belt Adjustment
  Compressor Belt 22-76
  Power Steering Belt 22-76
Condensor
  Replacement 22-77
A/C System Service
  Evacuation 22-78
  Charging 22-79
  Leak Test 22-80

*: Read SRS precautions before working in these areas.

Special Tools

Ref. No.	Tool Number	Description	Qty	Page Reference
①	07LAJ–PT3010A	Test harness	1	22-39, 22-43, 22-45

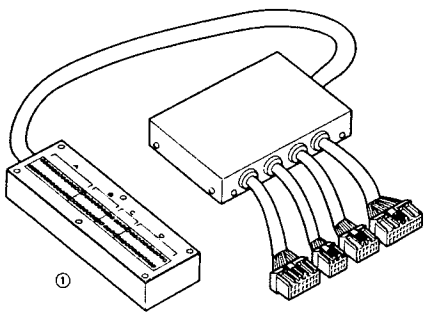

Illustrated Index

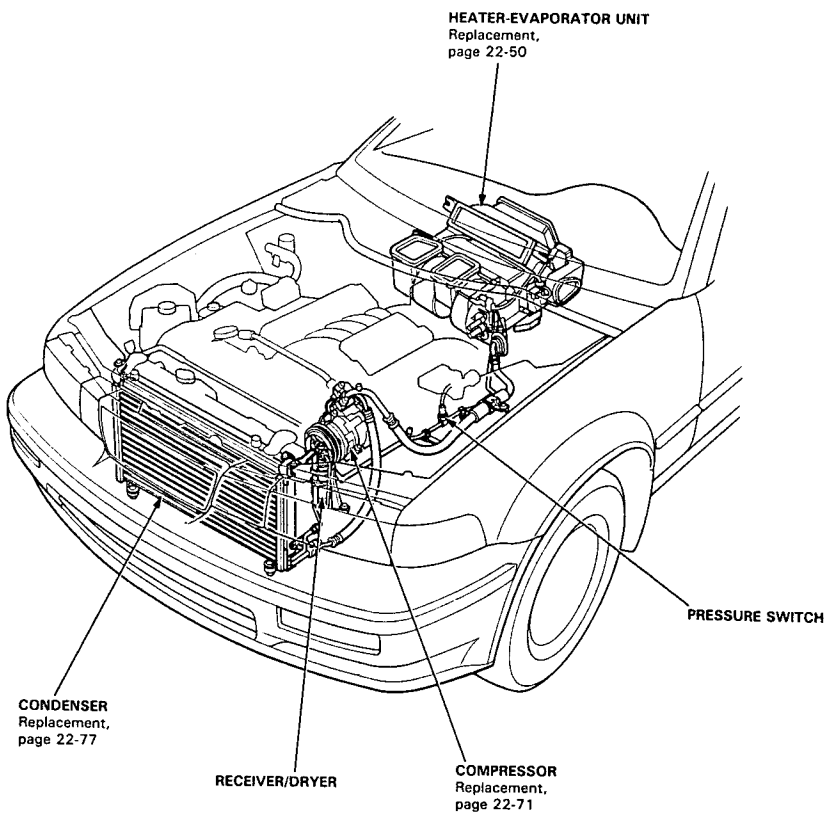

Wiring/Connector Locations

Engine Compartment

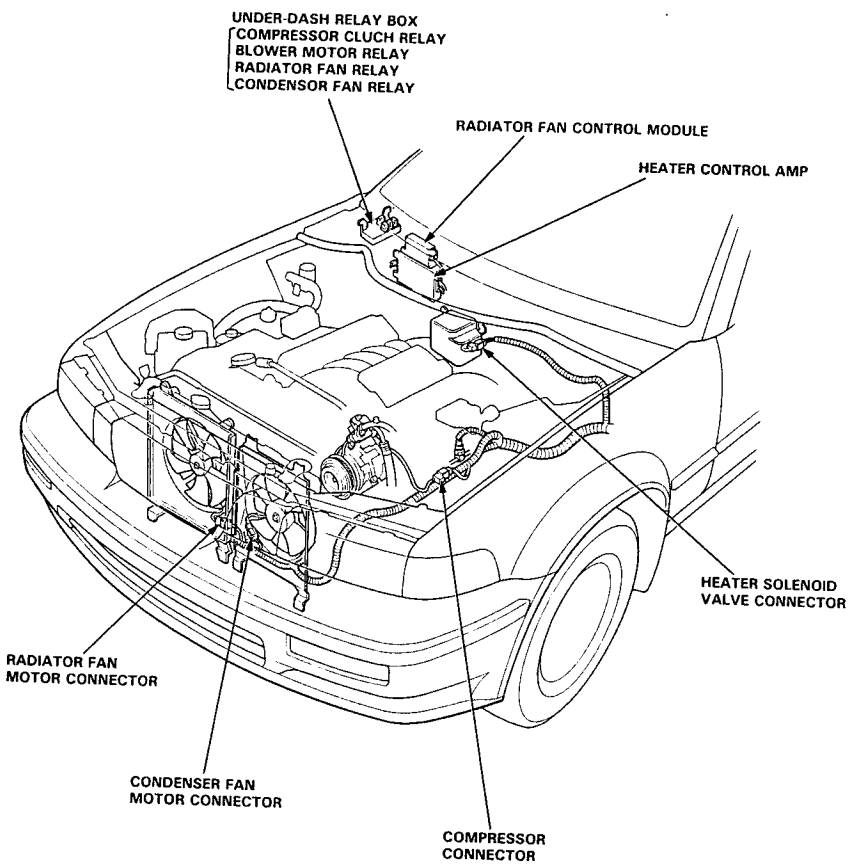

Heater-Evaporator Unit

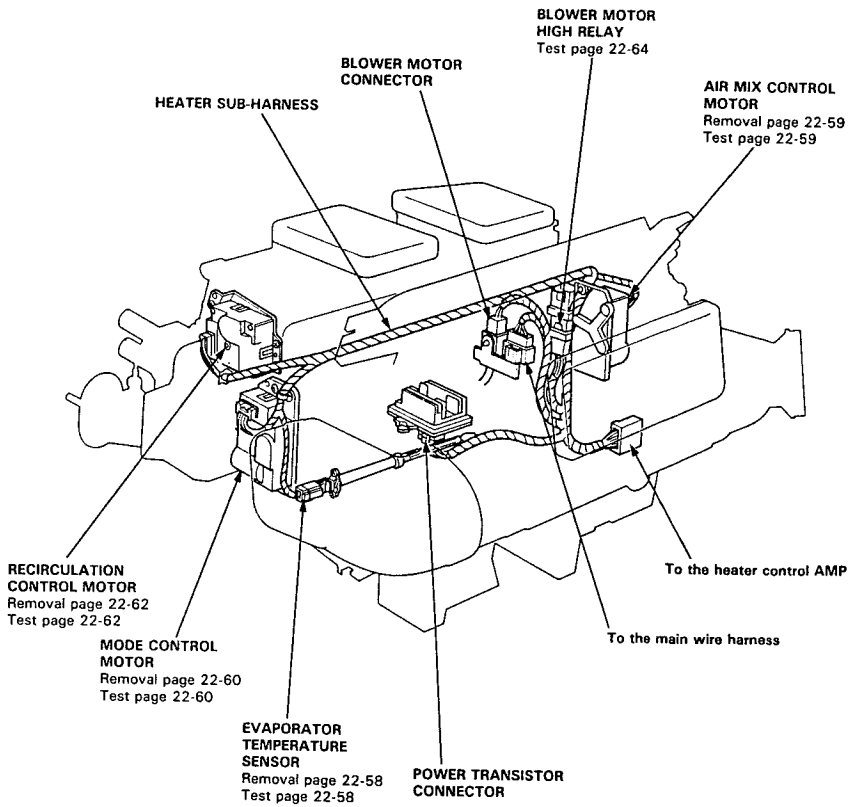

Heater-Evaporator Door Positions

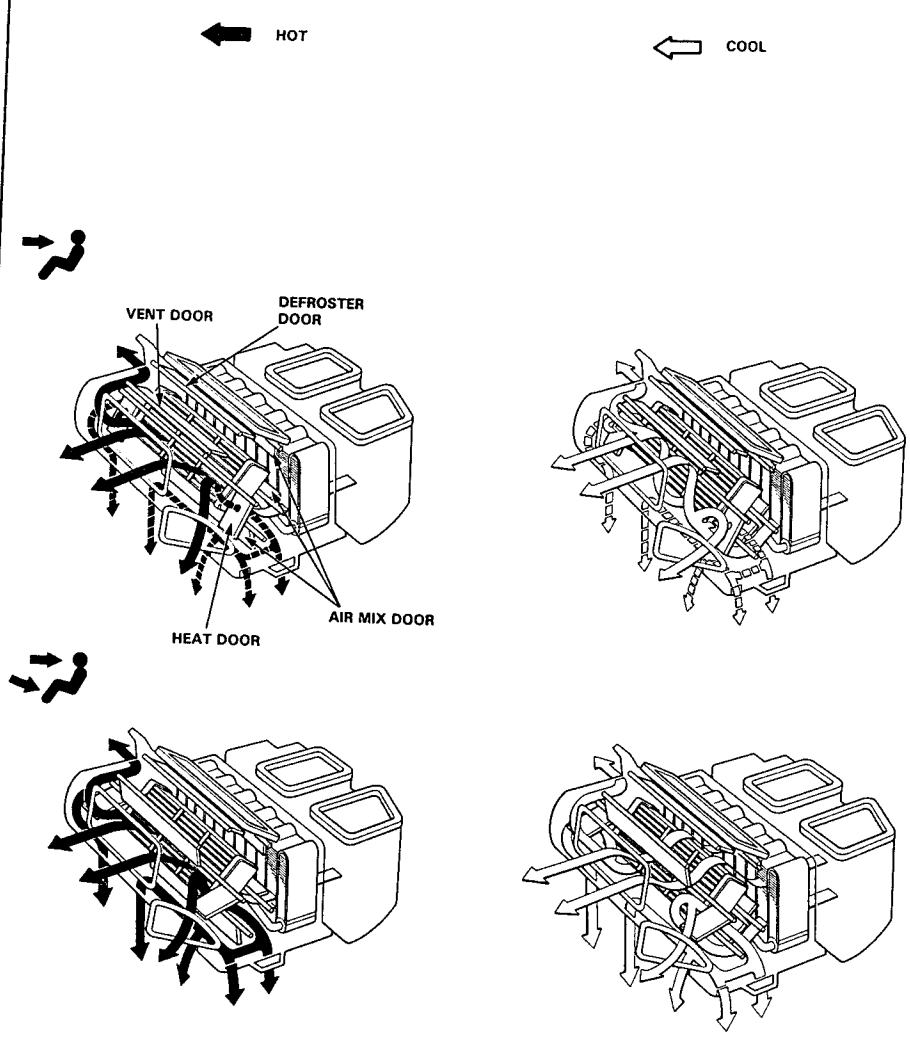

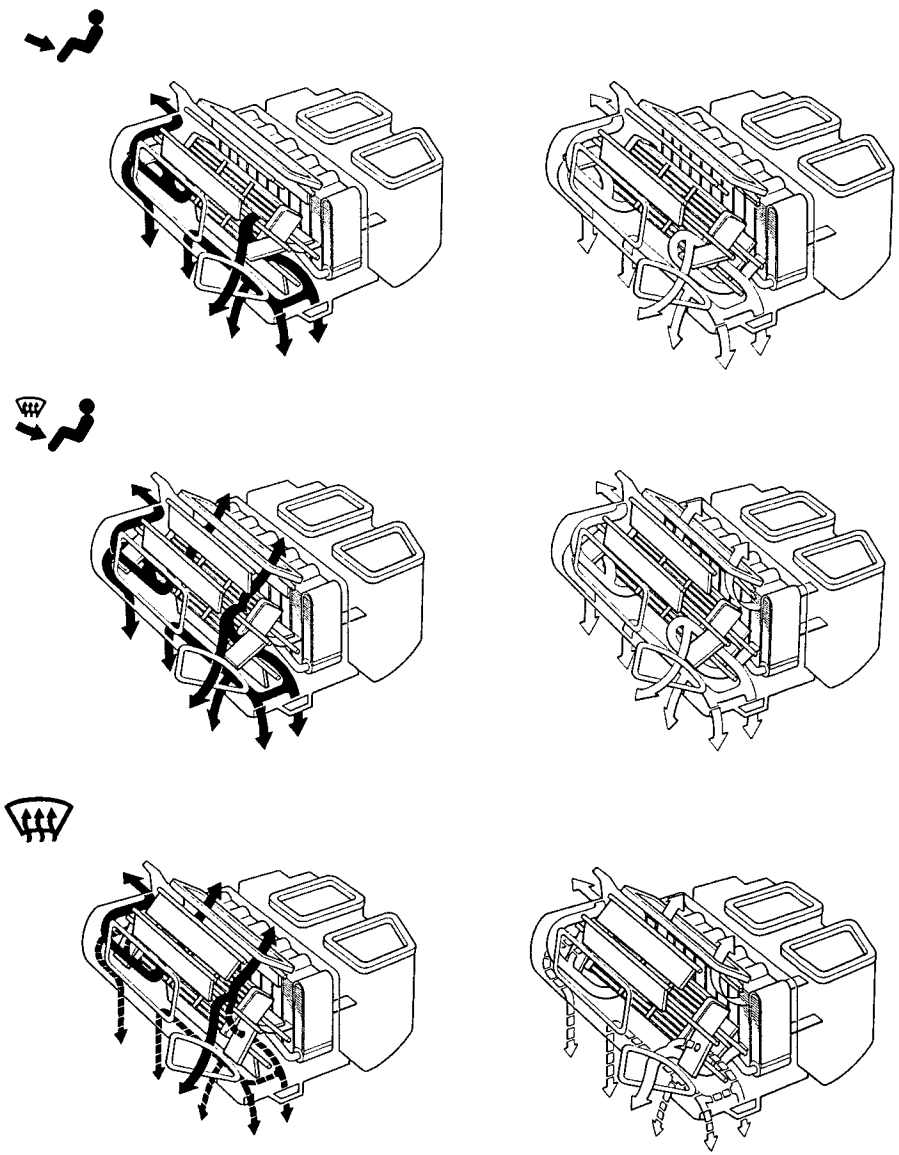

Circuit Diagram

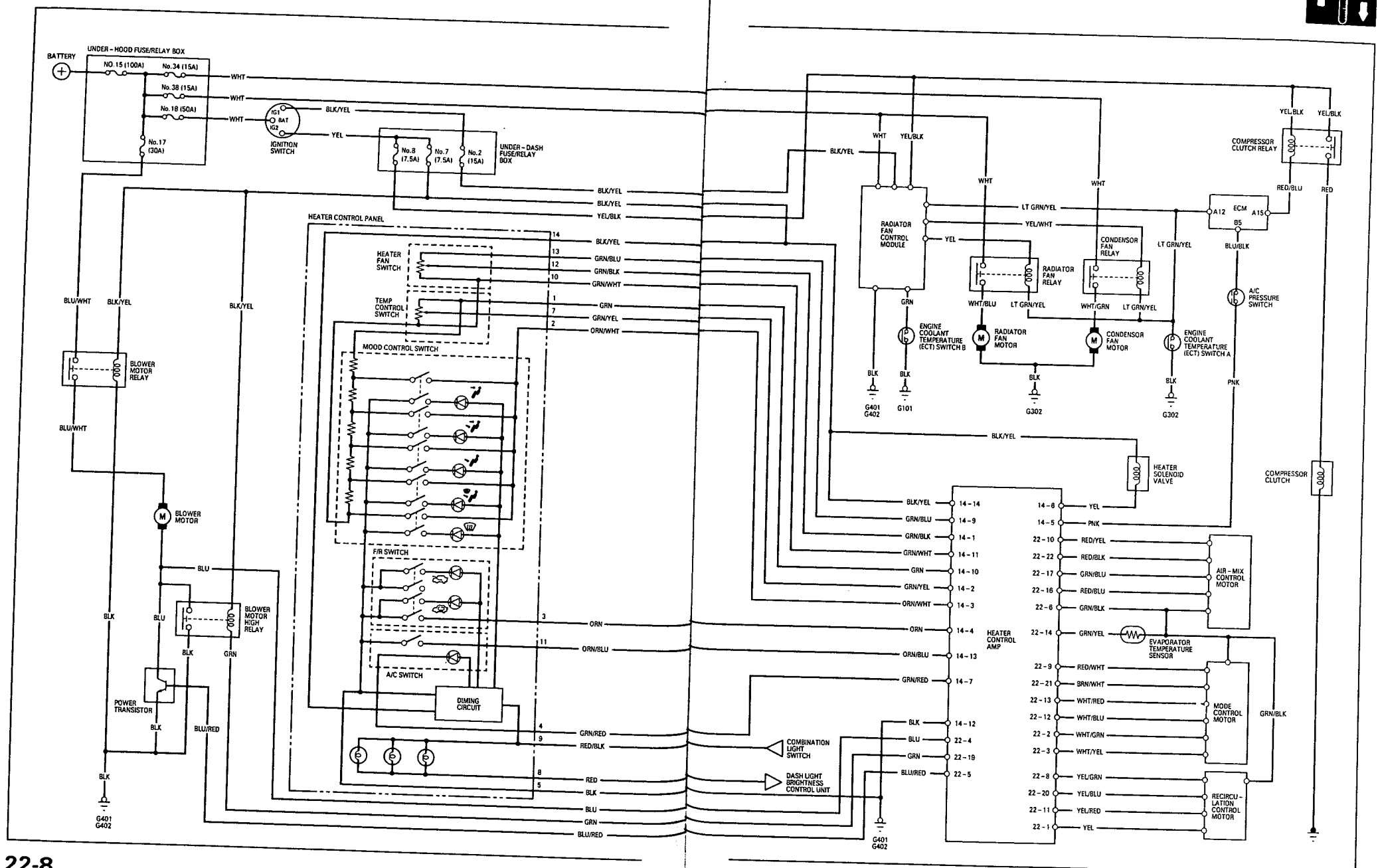

Description

Outline

The air conditioning system delivers cooled air into the passenger compartment by circulating refrigerant through the system as shown below.

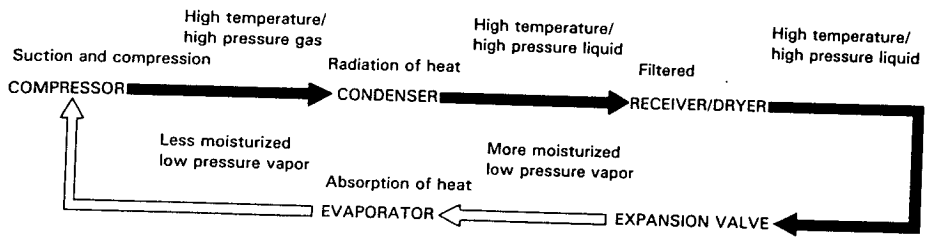

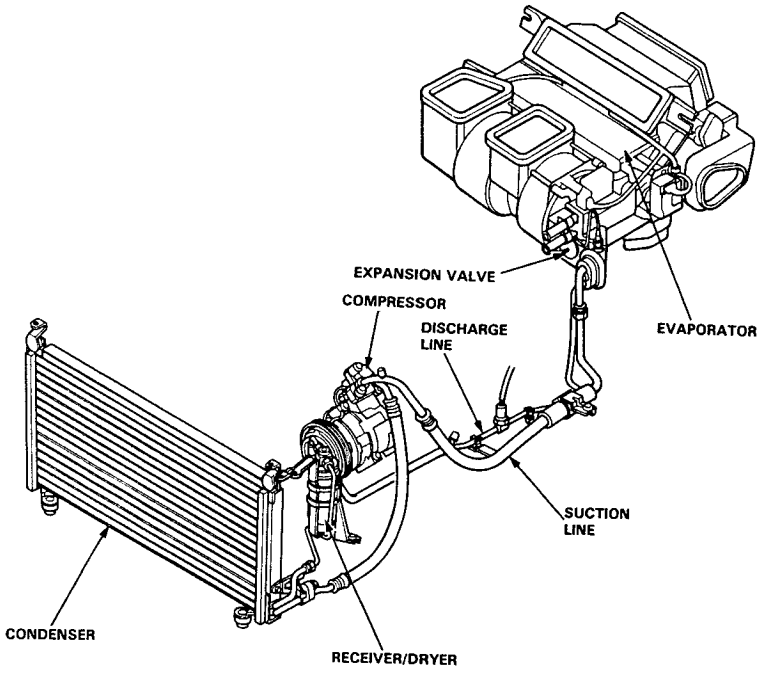

Troubleshooting

Self-diagnosis Circuit Check

This air conditioner system has a built-in self-diagnosis feature. To run it, set the controls in the following positions:

- TEMPERATURE CONTROL LEVER → MAX HOT
- FAN CONTROL LEVER → OFF
- RECIRCULATION SWITCH → RECIRCULATE

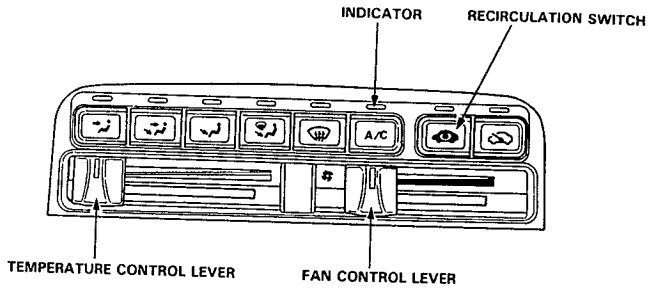

Turn the ignition switch ON, then alternate the RECIRCULATION SWITCH between FRESH and RECIRCULATE three times within five seconds after turning the ignition switch ON. The A/C indicator light will come on for an instant, and then go off. Wait for at least one minute to see if any problem codes are displayed.

If any problems are found in the component circuits listed below, the A/C indicator light will flash the code, stop, then repeat the code. The number of times the indicator light flashes indicates the problem code. (See code chart below.)

NOTE: If there are two or more problems simultaneously, the indicator light will flash only the lowest number code.

CODE	COMPONENT CIRCUIT WITH PROBLEM	POSSIBLE CAUSE	Refer to PAGE
1	EVAPORATOR TEMPERATURE SENSOR	Open or short circuit	22-16
2	AIR MIX CONTROL MOTOR	Open or short circuit	22-18
3	MODE CONTROL MOTOR	Open or short circuit	22-20
4	RECIRCULATION CONTROL MOTOR	Open or short circuit	22-22
5	BLOWER MOTOR	Open circuit	22-24

To turn the self-diagnosis function OFF, change any of the following controls:

- TEMPERATURE CONTROL LEVER → COLD
- FAN CONTROL SWITCH → ON
- IGNITION SWITCH → OFF

Troubleshooting

Reference Chart

Use this chart if the self-diagnosis checks don't identify any cause for the symptom.
Across each row in the chart, the potential sources of a symptom are ranked in the order they should be inspected, in starting with①. Find the symptom in the left column, read across to the most likely source, then refer to the page listed at the top of that column. If inspection shows the component is OK, try component ②, etc.

SYSTEM / SYMPTOM	BLOWER MOTOR	POWER TRAN-SISTOR	RECIRCU-LATION CONTROL MOTOR	MODE CONTROL MOTOR	AIR MIX CONTROL MOTOR	EVAPO-RATOR TEMPE-RATURE SENSOR	HEATER CONTROL AMP	PAGE
System does not work at all.							①	22-34
Blower motor does not run at all.	①						②	22-24
No voltage is indicated on the BLU/WHT wire at the blower motor.	①							22-26
Blower motor does not opereate on all speeds.	①							22-28
Blower motor only runs in TOP speed position; does not run in any other speed position.		①					②	22-32
Recirculation function does not work properly.			①				②	22-22
No air direction control.				①			②	22-20
No hot air from blower.					①		②	22-18
No cold air from blower.					①	②	③	22-18

SYSTEM / SYMPTOM	FAN MOTOR	RADIATOR FAN CONTROL MODULE	A/C SYSTEM PRESSURE	HEATER CONTROL AMP	ENGINE COOLANT TEMPERATURE (ECT) SWITCH A	PAGE
Both fans do not run for engine cooling, but they both run with A/C ON.					①	22-41
Both fans do not run at all.	②	①				22-42
Condenser fan motor does not run with A/C system ON.	①	②				22-38
Radiator fan motor does not run with A/C system ON.	①	②				22-35
A/C compressor clutch does not engage.			①	②		22-44
A/C system does not work (Compressor and both fan motors)			①	②		22-46

Heater Control Panel Input/Output Signals

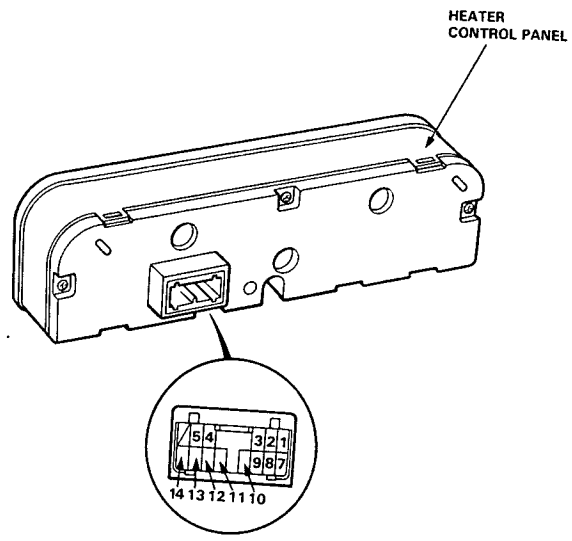

View from wire side

Wire Position		Signal		Wire Position		Signal	
1	GRN	+5 V	INPUT	8	RED	DASH LIGHT BRIGHTNESS CONTROL UNIT	OUTPUT
2	ORN/WHT	MODE	OUTPUT	9	RED/BLK	COMBINATION LIGHT SWITCH	INPUT
3	ORN	RECIRC	OUTPUT	10	GRN/WHT	SENSOR GND	———
4	GRN/RED	A/C LED	OUTPUT	11	ORN/BLU	A/C ON	INPUT
5	BLK	GND	———	12	GRN/BLK	BLOWER CONTROL	OUTPUT
6				13	GRN/BLU	HEATER FAN SWITCH	INPUT
7	GRN/YEL	TEMP CONTROL	OUTPUT	14	BLK/YEL	IG2	INPUT

Troubleshooting

Heater Control AMP Input/Output Signals

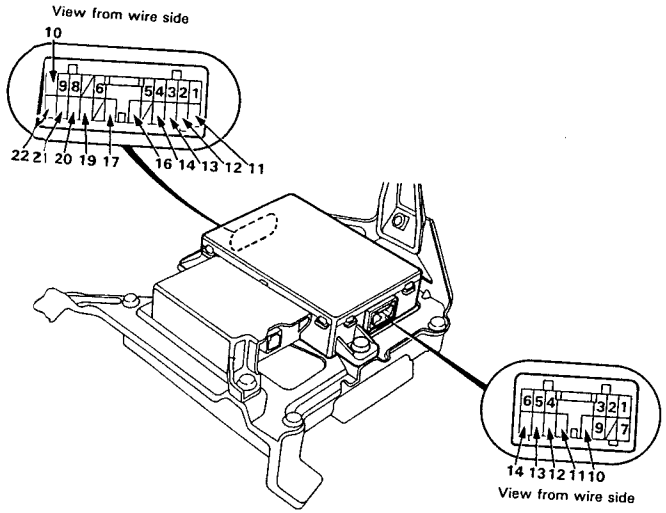

22P

Wire Position		Signal		Wire Position		Signal	
1	YEL	FRESH POSITION	OUTPUT	12	WHT/BLU	MODE 2	OUTPUT
2	WHT/GRN	MODE 3	OUTPUT	13	WHT/RED	MODE 1	OUTPUT
3	WHT/YEL	MODE 4	OUTPUT	14	GRN/YEL	EVAPORATOR SENSOR	OUTPUT
4	BLU	BLOWER FEEDBACK	INPUT	15			
5	BLU/RED	POWER TRANSISTOR BASE	OUTPUT	16	RED/BLU	AIR MIX POSITION	INPUT
6	GRN/BLK	SENSOR GND	——	17	GRN/BLU	+5 V	OUTPUT
7				18			
8	YEL/GRN	RECIRC.	OUTPUT	19	GRN	BLOWER HIGH RELAY	INPUT
9	RED/WHT	MODE DEF	OUTPUT	20	YEL/BLU	FRESH	OUTPUT
10	RED/YEL	AIR MIX HOT	OUTPUT	21	BRN/WHT	MODE VENT	OUTPUT
11	YEL/RED	RECIRC. PSITION	OUTPUT	22	RED/BLK	AIR MIX COOL	OUTPUT

14P

Wire Position		Signal		Wire Position		Signal	
1	GRN/BLK	FAN CONTROL POSITION	INPUT	8			
2	GRN/YEL	TEMP CONTROL POSITION	INPUT	9	GRN/BLU	HEATER FAN SWITCH	OUTPUT
3	ORN/BLU	MODE POSITION	INPUT	10	GRN	+5 V	OUTPUT
4	ORN	RECIRC.	OUTPUT	11	GRN/WHT	SENSO GND	——
5	PNK	ECM (ACS)	INPUT	12	BLK	GND	——
6	YEL	HEATER VALVE SOLENOID	INPUT	13	ORN/BLU	A/C SWITCH	OUTPUT
7	GRN/RED	A/C SWITCH LED	INPUT	14	BLK/YEL	IG2	INPUT

Radiator Fan Control Module Input Tests

NOTE: Perform the following tests with the radiator fan control module connected and the ignition switch ON and th A/C switch OFF.
If you find the cause of a problem, correct it before you continue.

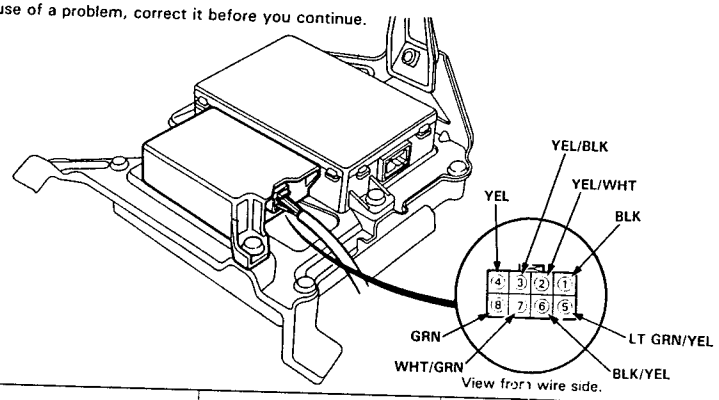

WIRE POSITION	TEST CONDITION	DESIRED RESULTS	CORRECTIVE ACTION IF DESIRED RESULTS ARE NOT OBTAINED
① BLK	Check for voltage to body ground.	Should have less than 1 volt.	Repair open to body ground.
⑦ WHT/GRN	Check for battery voltage.	Should have battery voltage.	Check No. 39 fuse, if OK repair open in WHT wire.
⑥ BLK/YEL	Check for battery voltage (Ignition switch—ON)		Check No. 2 fuse, if OK repair open in BLK/YEL wire.
③ YEL/BLK	Check for battery voltage (Ignition switch—ON)		Check No. 8 fuse, if OK repair open in YEL/BLK wire.
② YEL/WHT	Check for battery voltage (Ignition switch—ON)		Replace the radiator fan control module. Before you connect the new radiator fan control module, check continuity between the YEL/WHT (or YEL) wire and ground, using the 20 k scale on your ohmmeter. There should be no continuity. If there is continuity, the new radiator fan control module will be damaged when you connect it.
④ YEL	Check for battery voltage (Ignition switch—ON)		
⑤ LT GRN/YEL	Connect to body ground.	Condenser fan and cooling fan should come on.	Check for open in the LT GRN/YEL between the radiator fan control module and condenser fan relay or radiator fan relay. If OK, check for open in the YEL/WHT between the radiator fan control module and condenser fan relay or YEL between radiator fan control moduel and radiator fan relay. If OK, test condenser fan relay or radiator fan relay.
⑧ GRN	Check for voltage.	Approx 11 V (engine coolant temperature below 108°C)	Faulty engine coolant temperature (ECT) switch, short to body ground or fauly radiator fan control module.

Troubleshooting

Flowchart—Evaporator Temperature Sensor

Self-diagnosis A/C LED light indicates code 1: A problem in the evaporator sensor circuit. Use a digital multimeter (KS-AHM-32-003) to check it.

The evaporator temperature sensor is a temperature dependent resistor (thermistor). The resistance of the thermistor decreases as the evaporator outlet air temperature increases.

Self-diagnosis circuit check indicates a problem in the evaporator temperature sensor.

Disconnect 2P connector from the evaporator temperature sensor.

Measure resistance between the No. ① and No. ② terminal of sensor.

*Dip the sensor in icy water and measure the resistance. Then poor hot water on the sensor and check for change in resistance

Sensor resistance should be within specification as shown.

NO → **Replace the evaporator temperature sensor.**

YES

Turn the ignition switch ON.

Measure voltage between GRN/YEL wire terminal (+) in the other half of the connector and body ground.

Is there 4–6 V?

NO → To page 22-17

YES

Measure voltage between GRN/YEL wire terminal (+) and GRN/BLK wire terminal (–).

Is there 4–6 V?

NO → **Repair open in the GRN/BLK wire between the heater control AMP and the evaporator temperature sensor.**

YES

Substitute a known-good heater control AMP and recheck. If symptom/ indication goes away, replace the original heater control AMP.

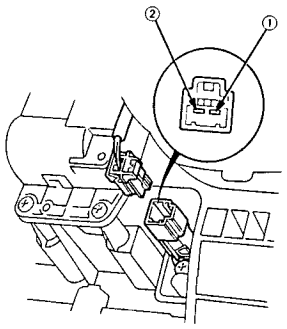

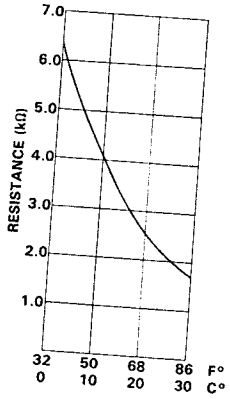

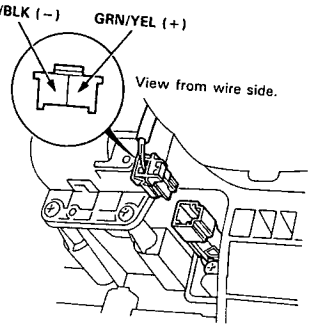

From page 22-16

Turn the ignition switch OFF.

Remove the heater control AMP.

Disconnect the 22P connector from the heater control AMP.

Check the GRN/YEL wire for continuity to body ground.

Is there continuity?

YES → **Repair short in the GRN/YEL wire between the evaporator temperature sensor and the heater control AMP.**

NO

Check for continuity in the GRN/YEL wire between the evaporator temperature sensor and heater control AMP.

Is there continuity?

NO → **Repair open in the GRN/YEL wire between the evaporator temperature sensor and the heater control AMP.**

YES

Substitute a known-good heater control AMP and recheck. If symptom/indication goes away, replace the original heater control AMP.

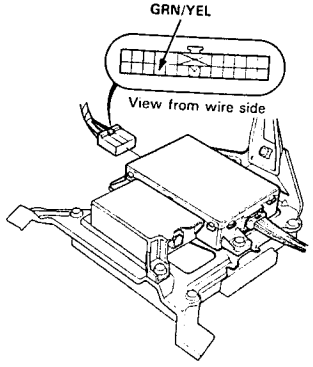

Troubleshooting

Flowchart—Air Mix Control Motor

Self-diagnosis A/C LED light Indicates code 2: A problem in the air mix control motor circuit. Use a digital multimeter (KS-AHM-32-003) to check it.

The air mix control motor regulates the mixture of cool/hot air according to output from the heater control AMP.

Self-diagnosis circuit check indicates a problem in the air mix control motor.

Disconnect the 7P connector from the air mix control motor.

Test the air mix control motor. (see page 22-59)

Is the motor OK?

- NO → **Replace the air mix control motor. If the air mix control door is stuck, repair it.**
- YES ↓

Remove the heater control AMP.

Disconnect the 22P connector from the heater control AMP

Check each wire for continuity between the air mix motor and the heater control AMP:
- GRN/BLU wire
- RED/BLU wire
- GRN/BLK wire
- RED/YEL wire
- RED/BLK wire

Is there continuity?

- NO → **Repair any open in the wire(s) between the air mix control motor and the heater control AMP.**
- YES ↓

At either connector, check each wire for continuity to body ground.
- GRN/BLU wire
- RED/BLU wire
- RED/YEL wire
- RED/BLK wire

Is there continuity?

- YES → **Repair any short in the wire(s) between the air mix control motor and the heater control AMP.**
- NO ↓

Disconnect the 14P connector from the heater control AMP.

Remove the heater control panel. (see page 22-49).

Disconnect the 14P connector from the heater control panel.

To page 22-19

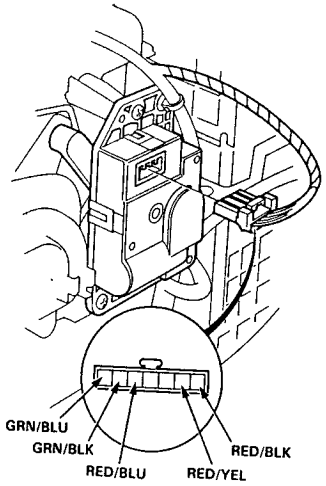

View from wire side.

22P CONNECTOR

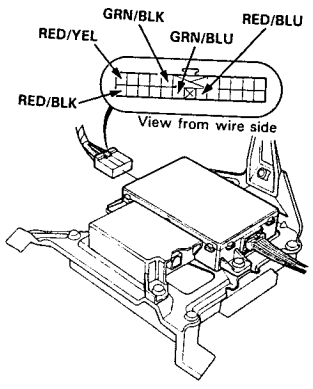

View from wire side

From page 22-18

Check each wire for continuity between the heater control AMP and the heater control panel.
- GRN/YEL wire
- GRN/WHT wire
- GRN wire

Is there continuity?

- NO → **Repair any open in the wire(s) between the heater control AMP and the heater control panel.**
- YES ↓

At either connector, check each wire for continuity to body ground and to each other.
- GRN/YEL wire
- GRN/WHT wire
- GRN wire

Is there continuity?

- YES → **Repair any short in the wire(s) between the heater control AMP and the heater control panel.**
- NO ↓

Reconnect the 14P connector to the heater control AMP.

Turn the ignition switch ON.

Measure voltage between the GRN wire terminal heater control panel connector harness half and body ground.

Is there 4–6 V?

- NO → **Substitute a known-good heater control AMP and recheck. If symptom/indication goes away, replace original heater control AMP.**
- YES ↓

Substitute a known-good heater control panel and recheck. If symptom/indication goes away, replace original heater control panel.

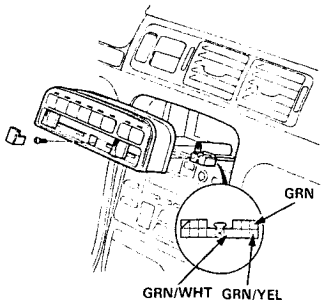

View from wire side

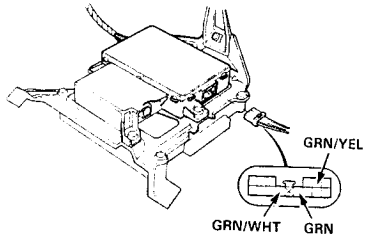

View from wire side

14P CONNECTOR

Troubleshooting

Flowchart—Mode Control Motor

Self-diagnosis A/C LED light indicates code 3: A problem in the mode control motor circuit. Use a digital multimeter (KS-AHM-32-003) to check it.

The mode control motor controls the outlet air direction and volume according to output from the heater control AMP.

Self-diagnosis circuit check indicates a problem in the mode control motor.

Disconnect the 7P connector from the mode control motor.

Test the mode control motor. (see page 22-60)

Is the motor OK?

- NO → **Replace the mode control motor. If any mode control door is stuck, repair it.**
- YES ↓

Remove the heater control AMP.

Disconnect the 22P connector from the heater control AMP.

Check each wire for continuity between the mode control motor and the heater control AMP:
- WHT/RED wire
- WHT/BLU wire
- WHT/GRN wire
- WHT/YEL wire
- GRN/BLK wire
- BRN/WHT wire
- RED/WHT wire

Is there continuity?

- NO → **Repair any open in the wire(s) between the mode control motor and the heater control AMP.**
- YES ↓

At either connector, check each wire for continuity to body ground and to each other.
- WHT/RED wire
- WHT/BLU wire
- WHT/GRN wire
- WHT/YEL wire
- GRN/BLK wire
- BRN/WHT wire
- RED/WHT wire

Is there continuity?

- YES → **Repair any short in the wire(s) between the mode control motor and the heater control AMP.**
- NO ↓

To page 22-21

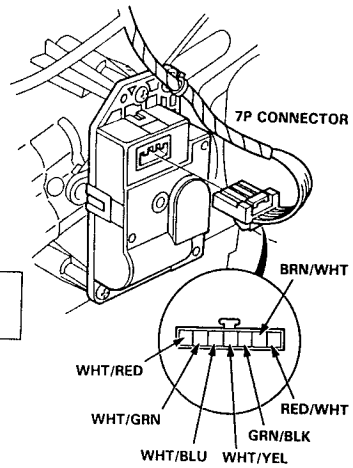

View from wire side

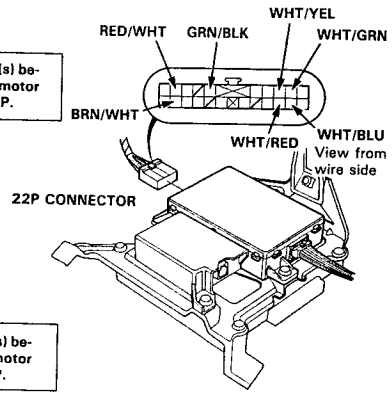

View from wire side

From page 22-20

Disconnect the 14P connector from the heater control AMP.

Remove the heater control panel (see page 22-49).

Disconnect the 14P connector from the heater control panel.

Check each wire for continuity between the heater control AMP and the heater control panel.
- ORN/WHT wire
- GRN wire

Is there continuity?

- NO → **Repair any open in the wire(s) between the heater control AMP and the heater control panel.**
- YES ↓

At either connector, check each wire for continuity to body ground.
- ORN/WHT wire
- GRN wire

Is there continuity?

- YES → **Repair any short in the wire(s) between the heater control AMP and the heater control panel.**
- NO ↓

Reconnect the 14P connector to the heater control AMP.

Turn the ignition switch ON.

Measure voltage between the GRN wire terminal heater control panel connector harness half and body ground.

Is there 4—6 V?

- NO → **Substitute a known-good heater control AMP and recheck. If symptom/indication goes away, replace original heater control AMP.**
- YES ↓

Substitute a known-good heater control panel and recheck. If symptom/indication goes away, replace original heater control panel.

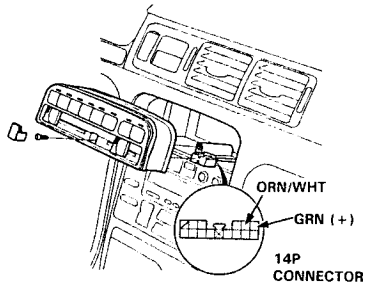

View from wire side

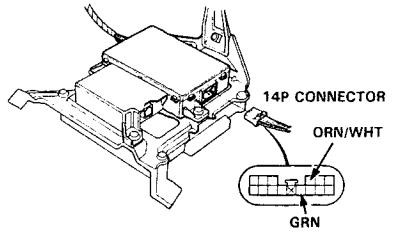

View from wire side

Troubleshooting

Flowchart—Recirculation Control Motor

Self-diagnosis A/C LED light indicates code 4: A problem in the recirculation control motor circuit. Use a digital multimeter (KS-AHM-32-003) to check it.

The recirculation control motor regulates the fresh/recirc door according to output from the heater control AMP.

Self-diagnosis circuit check indicates a problem in the recirculation control motor.

Disconnect the 7P connector from the recirculation control motor.

Test the recirculation control motor (see page 22-62).

Is the motor OK?

- NO → **Replace the recirculation control motor. If any recirculation control door is stuck, repair it.**
- YES ↓

Remove the heater control AMP.

Disconnect the 22P connector from the heater control AMP.

Check each wire for continuity between the recirculation control motor and the heater control AMP.
- YEL/RED wire
- YEL wire
- GRN/BLK wire
- YEL/GRN wire
- YEL/BLU wire

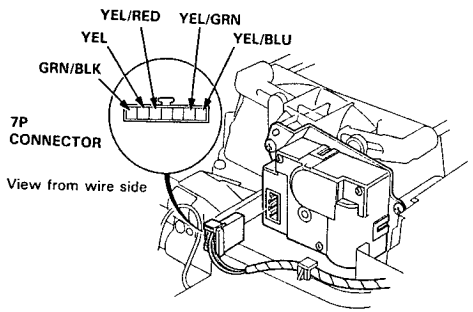

Is there continuity?

- NO → **Repair any open in the wire(s) between the recirculation control motor and the heater control AMP.**
- YES ↓

At either connector, check each wire for continuity to body ground.
- YEL/RED wire
- YEL wire
- GRN/BLK wire
- YEL/GRN wire
- YEL/BLU wire

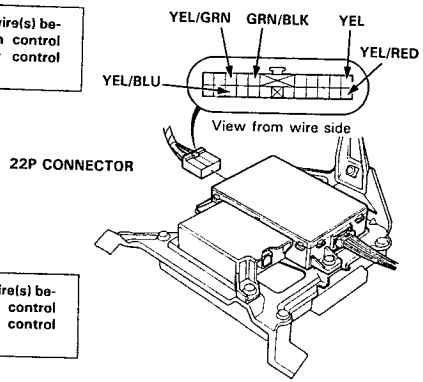

Is there continuity?

- YES → **Repair any short in the wire(s) between the recirculation control motor and the heater control AMP.**
- NO ↓

To page 22-23

From page 22-22

Disconnect the 14P connector from the heater control AMP.

Remove the heater control panel (see page 22-49).

Disconnect the 14P connector from the heater control panel.

Check for continuity in the ORN wire between the heater control AMP and the heater control panel.

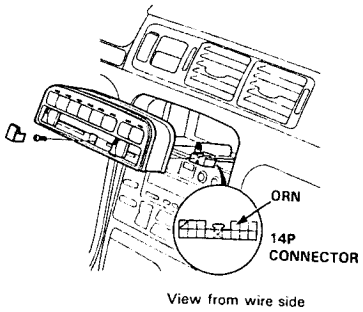

Is there continuity?

- NO → **Repair open in the ORN wire between the heater control AMP and the heater control panel.**
- YES ↓

At either connector, check for continuity between the ORN wire and body ground.

Is there continuity?

- YES → **Repair short in the ORN wire between the heater control AMP and the heater control panel.**
- NO ↓

Reconnect the 14P connector to the heater control panel.

Push the recirculation switch, then check for continuity between the ORN wire terminal and body ground.

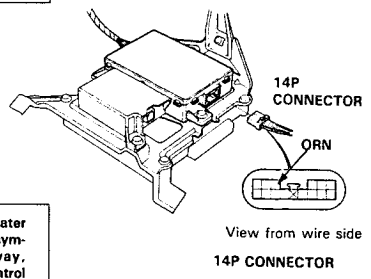

Is there continuity?

- NO → **Substitute a known-good heater control panel and recheck. If symptom/indication goes away, replace the original heater control panel.**
- YES ↓

Substitute a known-good heater control AMP and recheck. If symptom/indication goes away, replace the original heater control AMP.

Troubleshooting

Flowchart—Blower Motor

Self-diagnosis A/C LED light indicates code 5: A problem in the blower motor circuit.
Use a digital multimeter (KS-AHM-32-003) to check it.
The speed of the blower motor is controlled by signals sent from the heater control AMP.

Self-diagnosis circuit check indicates a problem in the blower motor.

Does the blower motor run on any speed?
- YES → **Go to blower motor speed troubleshooting (see page 22-28).**
- NO ↓

Check No. 17 (30 A), No. 7 (7.5 A) fuses.*

*No. 17 (30 A) fuse: In the under-hood fuse/relay box
No. 7 (7.5 A) fuse: In the under-dash fuse/relay box

Are fuses OK?
- NO → **Replace the fuses.**
- YES ↓

Disconnect the 2P connector from blower motor.

Turn the ignition switch ON.

Measure voltage between the BLU/WHT wire terminal (+) blower motor connector harness half and body ground.

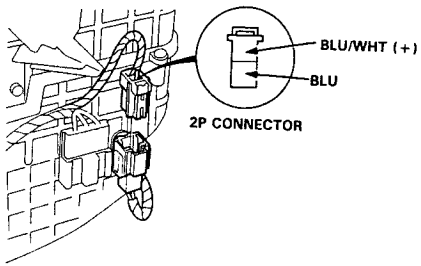

Is there battery voltage?
- NO → **Go to blower motor relay troubleshooting (see page 22-26)**
- YES ↓

Turn the ignition switch OFF.

Reconnect the 2P connector to the blower motor.

To page 22-25

From page 22-24

Turn the ignition switch ON.

Connect a jumper wire between the BLU wire of blower motor and body ground.

Does the blower motor run?
- NO → **Replace the blower motor.**
- YES ↓

Repair open in the BLU wire.

Troubleshooting

Flowchart—Blower Motor Relay

No voltage is indicated on the BLU/WHT wire at the blower motor.

Remove the blower motor relay.

Measure voltage between the No. ① terminal (+) of under-dash relay box and body ground.

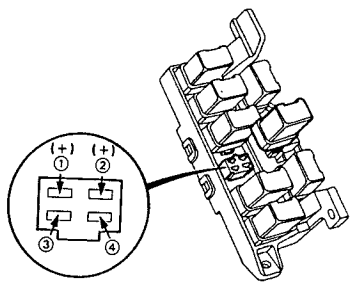

Is there battery voltage?

- NO → Repair open in the BLU/WHT wire between the under-hood relay box and No. 17 (30 A) fuse.
- YES → Turn the ignition switch ON.

Measure voltage between the No. ② terminal (+) of under-dash relay box and body ground.

Is there battery voltage?

- NO → Repair open in the BLK/YEL wire between the under-dash relay box and No. 7 (7.5 A) fuse.
- YES → Turn the ignition switch OFF.

Check for continuity between the No. ④ terminal of under-dash relay box and body ground.

Is there continuity?

- NO → Check for an open in the BLK wire between the under-dash relay box and body ground. If wire is OK, check for poor ground at G401, 402.
- YES → Replace the blower motor relay.

Troubleshooting

Blower Motor Speed

Blower motor does not operate on all speeds.

Does blower motor operate on top speed only?
- YES → **Go to blower motor top speed troubleshooting (see page 22-32).**
- NO ↓

Test the blower motor relay (see page 22-64).

Is the relay OK?
- NO → **Replace the relay.**
- YES ↓

Disconnect the 4P connector from blower motor HIGH relay.

Turn the ignition switch ON.

Measure voltage between the BLK/YEL wire terminal (+) and body ground.

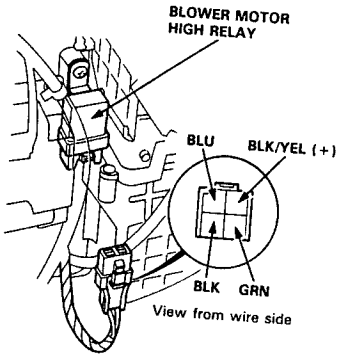

Is there battery voltage?
- NO → **Repair open in the BLK/YEL wire between the under-dash fuse/relay box and the blower motor HIGH relay.**
- YES ↓

Turn the ignition switch OFF.

Check for continuity in the BLK wire terminal and body ground.

Is there continuity?
- NO → **Check for an open in the BLK wire between the blower motor HIGH relay and body ground. If wire is OK, check for poor ground at G401,G402.**
- YES ↓

Turn the ignition switch ON.

To page 22-29

From page 22-28

Connect the BLU and BLK terminals with a jumper wire.

Does the blower run?
- NO → **Repair open in the BLU wire between the blower motor and the blower motor HIGH relay.**
- YES ↓

Test the blower motor HIGH relay. (see page 22-64).

Is the relay OK?
- NO → **Replace the relay.**
- YES ↓

Reinstall the blower motor relay.

Remove the heater control AMP. and disconnect the 14P connector.

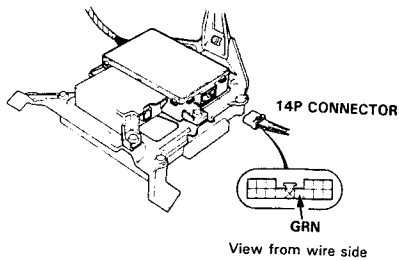

Connect the GRN wire at the heater control AMP to body ground with a jumper wire.

Does the blower run?
- NO → **Repair open in the GRN wire between the heater control AMP and the blower motor HIGH relay.**
- YES ↓

Turn the ignition switch OFF.

To page 22-30

(cont'd)

Troubleshooting

Flowchart—Blower Motor Speed (cont'd)

From page 22-29

Remove the heater control panel.

Disconnect the 14P connector from heater control panel.

Check each wire for continuity between the heater control panel and the heater control AMP.
- GRN/BLU wire
- GRN/BLK wire
- GRN/WHT wire

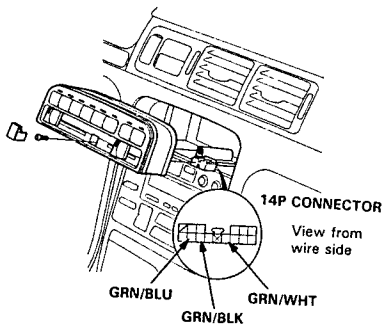

Is there continuity?

NO → **Repair any open in the wire(s) between the heater control panel and the heater control AMP.**

YES

Check each wire for continuity between the heater control panel and body ground.
- GRN/BLU wire
- GRN/BLK wire

Is there continuity?

YES → **Repair any short in the wire(s) between the heater control panel and the heater control AMP.**

NO

Reconnect the 14P connector to the heater control AMP.

Turn the ignition switch ON.

Measure voltage between the GRN/BLU wire terminal of heater control panel and body ground.

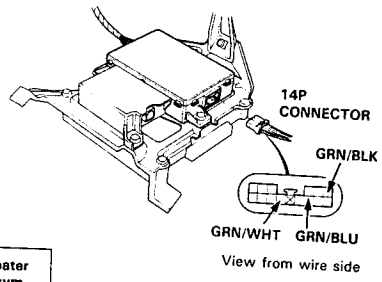

Is there approx. 5 V?

NO → **Substitute a known-good heater control AMP and recheck. If symptom/indication goes away, replace the original heater control AMP.**

YES

Substitute a known-good heater control panel and recheck. If symptom/indication goes away, replace the original heater control panel.

Flowchart—Blower Motor Top Speed

Blower motor only runs in TOP speed position; does not run in any other speed position.

Disconnect the 3P connector from power transistor.

Connect a jumper wire between the BLU wire at the power transistor connector and body ground.

Turn the ignition switch ON.

Does the blower motor run at HIGH speed?

- NO → **Repair open in the BLU wire between the power transistor and the blower motor.**
- YES ↓

Connect a jumper wire between the BLU and BLK wires of the power transistor.

Does the blower motor run at HIGH speed?

- NO → **Check for an open in the BLK wire between the power transistor and body ground. If wire is OK, check for poor ground at G401, 402.**
- YES ↓

To page 22-33

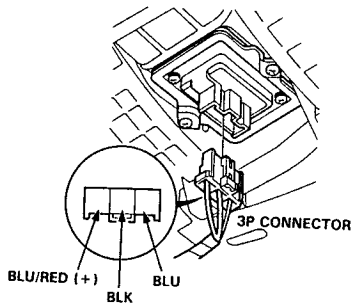

View from wire side

From page 22-32

Turn the ignition switch OFF.

Remove the heater control AMP.

Disconnect the 22P connector from the heater control AMP.

Check for continuity in the BLU/RED wire between the power transistor and the heater control AMP.

Is there continuity?

- NO → **Repair open in the BLU/RED wire between the power transistor and the heater control AMP.**
- YES ↓

Turn the ignition switch ON.

Measure voltage between the BLU wire terminal (+) of the heater control AMP 22P connector and body ground.

Is there battery voltage?

- NO → **Repair open in the BLU wire between the blower motor and the heater control AMP.**
- YES ↓

Turn the heater fan control lever to the middle of its range.

Measure voltage between the BLU/RED wire terminal (+) and body ground.

Is there 6.0–7.0 V?

- NO → **Substitute a known-good heater control AMP and recheck. If symptom/indication goes away, replace the original heater control AMP.**
- YES ↓

Replace the power transistor.

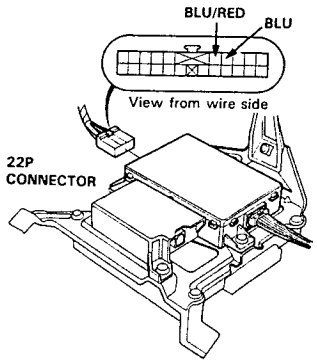

Troubleshooting

Flowchart—Power Circuits to Heater Control AMP

System does not work at all.

Check fuse No. 7 (7.5 A) in the under-dash fuse/relay box.

Are fuses OK?
- NO → Replace the fuse.
- YES ↓

Remove the heater control AMP.

Disconnect the 14P connector from the heater control AMP.

Turn the ignition switch ON.

Measure voltage between the BLK/YEL wire terminal (+) and body ground.

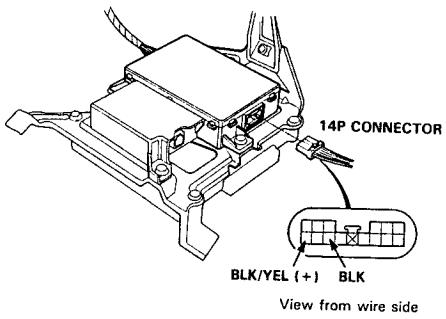

Is there battery voltage?
- NO → Repair open in the BLK/YEL wire between the heater control AMP and the under-dash fuse/relay box.
- YES ↓

Turn the ignition switch OFF.

Check for continuity between the BLK wire terminal and body ground.

Is there continuity?
- NO → Check for an open in the BLK wire between the heater control AMP and body ground. If wire is OK, check for poor ground at G401, 402.
- YES ↓

Substitute a known-good heater control AMP and recheck. If symptom/indication goes away, replace the original heater control AMP.

Flowchart—Radiator Fan

Radiator fan motor does not run with A/C system ON.

Remove the radiator fan relay from the under-dash relay box.

Measure voltage between the No. ① terminal (+) of the under-dash relay box and body ground.

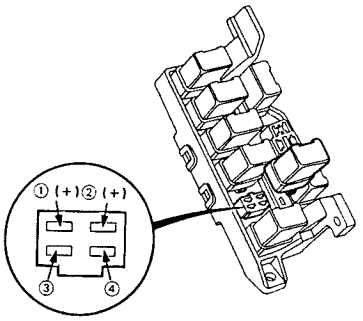

Is there battery voltage?
- NO → Repair open in the WHT wire between the under-dash relay box and the under-hood fuse/relay box.
- YES ↓

Turn the ignition switch ON.

Measure voltage between the No. ② terminal (+) of the under-dash relay box and body ground.

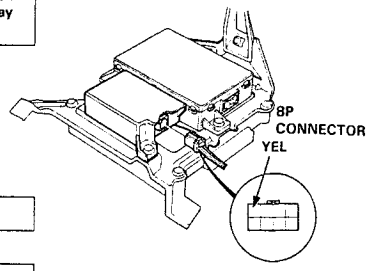

Is there battery voltage?
- NO → Turn the ignition switch OFF. → Disconnect the 8P connector from the radiator fan control module. → Check for continuity in the YEL wire between the radiator fan control module and the under-dash relay box No. ②. → Is there continuity?
  - NO → Repair open in the YEL wire between the radiator fan control module and the under-dash relay box.
  - YES → Test the radiator fan control module (see page 22-15).
- YES ↓

Turn the ignition switch OFF.

Test the radiator fan relay (see page 22-64).

Is the relay OK?
- NO → Replace the radiator fan relay.
- YES ↓

To page 22-36

(cont'd)

Troubleshooting

Flowchart—Radiator Fan (cont'd)

From page 22-35

Reinstall the radiator fan relay.

Connect the test harness "A" connector to the wire harness only, not the ECM. (see section 11).

Turn the ignition switch ON.

Using a jumper wire, connect A12 test harness terminal to body ground.

Does radiator fan motor run?

- YES → **Substitute a known-good ECM and recheck. If symptom/indication goes away, replace the original ECM.**
- NO ↓

Measure battery voltage between test harness terminal A12 and body ground.

Is there battery voltage?

- NO → **Repair open in the LT GRN/YEL wire between the under-dash relay box and the ECM.**
- YES ↓

Turn the ignition switch OFF.

Using a jumper wire connect A12 test harness terminal to body ground.

To page 22-37

TEST HARNESS
07LAJ–PT3010A

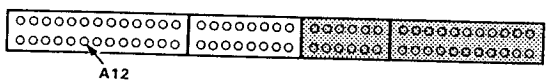

From page 22-36

Disconnect the 2P connect from radiator fan motor.

Turn the ignition switch ON.

Measure voltage between the WHT/BLU wire terminal (+) and body ground.

Is there battery voltage?

- NO → **Repair open in the WHT/BLU wire between the under-dash relay box and the radiator fan motor.**
- YES ↓

Turn the ignition switch OFF.

Test the radiator fan motor: connect the battery power to the No. ① wire terminal (+) and connect the No. ② wire terminal to body ground. The radiator fan motor should run.

Is the motor OK?

- NO → **Replace the radiator fan motor.**
- YES ↓

Check for an open in the BLK wire between the radiator fan motor and body ground. If wire is OK, check for poor ground at G302.

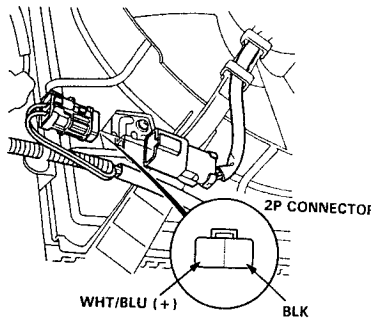

View from terminal side

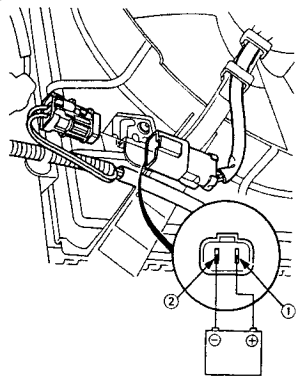

View from terminal side

Troubleshooting

Flowchart—Condenser Fan

Condenser fan motor does not run with A/C system ON.

Remove the condenser fan relay from the under-dash relay box.

Measure voltage between the No. ① terminal (+) of the under-dash relay box and body ground.

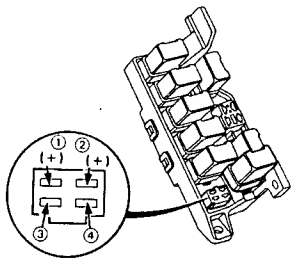

Is there battery voltage?

- NO → **Repair open in the WHT wire between the under-dash relay box and under-hood fuse/relay box.**
- YES ↓

Turn the ignition switch ON.

Measure voltage between the No. ② terminal (+) of the under-dash relay box and body ground.

Is there battery voltage?

- NO → Turn the ignition switch OFF. → Disconnect the 8P connector from the radiator fan control module. → Check for continuity in the YEL/WHT wire between the radiator fan control module and the under-dash relay box No. ②
  - Is there continuity?
    - NO → **Repair open in the YEL/WHT wire between the radiator fan control module and the under-dash relay box.**
    - YES → **Test the radiator fan control module (see page 22-15).**
- YES ↓

Turn the ignition switch OFF.

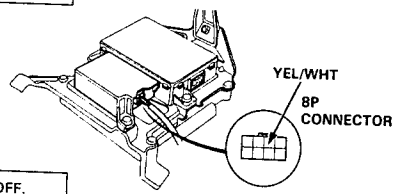

View from wire side

Test the condenser fan relay (see page 22-64).

Is the relay OK?

- NO → **Replace the condenser fan relay.**
- YES ↓

To page 22-39

From page 22-38

Reinstall the condenser fan relay.

Connect the test harness "A" connector to the wire harness only, not the ECM (see section 11).

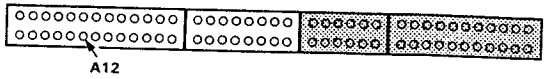

Turn the ignition switch ON.

Using a jumper wire connect A12 test harness terminal to body ground.

Does condenser fan motor run?

- YES → **Substitute a known-good ECM and recheck. If symptom/indication goes away, replace the original ECM.**
- NO ↓

Measure battery voltage between test harness terminal A12 and body ground.

Is there battery voltage?

- NO → **Repair open in the LT GRN/YEL wire between the relay box and the ECM.**
- YES ↓

Turn the ignition switch OFF.

Using a jumper wire connect A12 test harness terminal to body ground.

To page 22-40

(cont'd)

Flowchart—Condenser Fan (cont'd)

From page 22-39

Disconnect the 2P connect from condenser fan motor.

Turn the ignition switch ON.

Measure voltage between the WHT/GRN terminal (+) and body ground.

Is there battery voltage?

- NO → **Repair open in the WHT/GRN wire between the under-dash relay box and the condenser fan motor.**
- YES ↓

Turn the ignition switch OFF.

Test the condenser fan motor: Connect the battery power to the No. ① wire terminal (+) and connect the No. ② wire terminal to body ground. The condenser fan motor should run.

Is the motor OK?

- NO → **Replace the condenser fan motor.**
- YES ↓

Check for an open in the BLK wire between the condenser fan motor and body ground. If wire is OK, check for poor ground at G302.

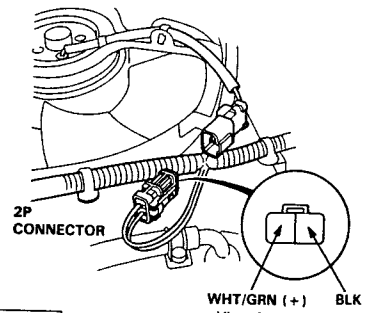

View from terminal side

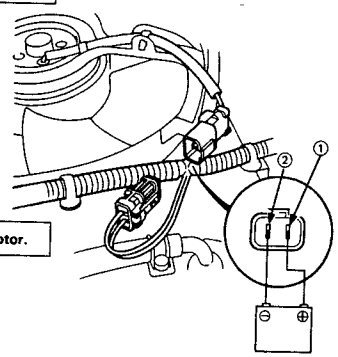

View from terminal side

Flowchart—Engine Coolant Temperature (ECT) Switch A

Both fans do not run for engine cooling, but they both run with the A/C system on.

Disconnect the 2P connector from the engine coolant temperature (ECT) switch A.

Connect a voltmeter between the LT GRN/YEL wire and body ground.

Turn the ignition switch ON.

Is there battery voltage?

- NO → **Repair open in the LT GRN/YEL wire to the ECT switch A.**
- YES ↓

Turn the ignition switch OFF.

Connect a jumper wire between the LT GRN/YEL wire and the BLK wire.

Turn the ignition switch ON.

Do the both fans run?

- NO → **Repair open in the BLK wire between the ECT switch A and body ground.**
- YES ↓

Check the temperature gauge.

Does it read above normal?

- NO → **Repair the cooling system.**
- YES ↓

Replace the ECT switch A.

View from terminal side

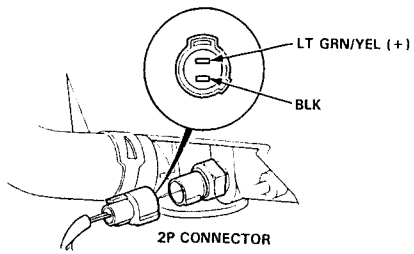

Troubleshooting

Flowchart—Both Fans

Both fans do not run at all.

Check fuse No. 8 (7.5 A), No. 34 (15 A) and No. 38 (15 A).*

*No. 8 (7.5 A) fuse: In the under-dash fuse box
No. 34 (15 A), 38 (15 A) fuses: In the under-hood fuse/relay box

Are fuses OK?
- NO → **Replace the fuses.**
- YES ↓

Remove the radiator fan control module.

Disconnect the 8P connector from the radiator fan control module.

Turn the ignition switch ON.

Measure voltage between the YEL/BLK wire terminal (+) and body ground.

Is there battery voltage?
- NO → **Repair open in the YEL/BLK wire between the radiator fan control module and the under-dash fuse box.**
- YES ↓

Turn the ignition switch OFF.

Reconnect the 8P connector to the radiator fan control module.

Turn the ignition switch ON.

Measure voltage between the YEL/WHT, YEL wire terminal and body ground.

Is there battery voltage?
- NO → **Test the radiator fan control module (see page 22-15).**
- YES ↓

To page 22-43

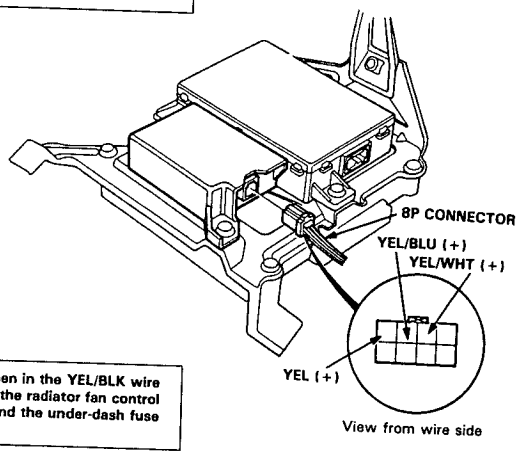

From page 22-42

Turn the ignition switch OFF.

Connect the test harness "A" connector to the wire harness only, not the ECM. (see section 11).

Turn the ignition switch ON.

Using a jumper wire connect A12 test harness terminal to body ground.

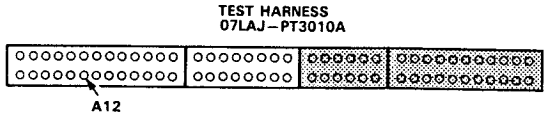

Does radiator, condenser fan motors run?
- YES → **Substitute a known-good ECM and recheck. If symptom/indication goes away, replace the original ECM.**
- NO ↓

Measure battery voltage between test harness terminal A12 and body ground.

Is there battery voltage?
- NO → **Repair open in the LT GRN/YEL wire between the under-dash relay box and the ECM.**
- YES ↓

Check for an open in the BLK wire between the radiator, condenser fan motors and body ground. If wire is OK, check for poor ground at G302.

Troubleshooting

Flowchart—Compressor

Compressor clutch does not engage.

Remove the compressor clutch relay from the under-dash relay box.

Turn the ignition switch ON.

Measure voltage between the No. ①, No. ② terminal ⊕ of the under-dash relay box and body ground.

Is there battery voltage?

- NO → **Repair open in the YEL/BLK wire between the compressor clutch relay and under-dash fuse/relay box.**
- YES ↓

Turn the ignition switch OFF.

Test the compressor clutch relay (see page 22-64).

Is the relay OK?

- NO → **Replace the compressor clutch relay.**
- YES ↓

Disconnect the 1P connector from A/C compressor clutch.

Check for continuity in the No. ③ terminal of the under-dash relay box and the 1P connector of compressor clutch.

Is there continuity?

- NO → **Repair open in the RED wire between the compressor clutch relay and the compressor clutch.**
- YES ↓

To page 22-45

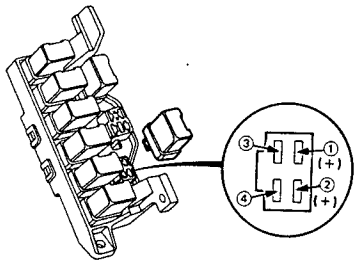

From page 22-44

Reconnect the 1P connector to the compressor clutch.

Using a jumper wire, connect the No. ① and No. ③ terminal of the under-dash relay box.

Turn the ignition switch ON.

Does the compressor clutch engage?

- NO → Measure the compressor clutch clearance (see page 22-73).
  - Is the clearance with specification?
    - NO → **Adjust the clearance and recheck.**
    - YES → **Replace the compressor clutch.**
- YES ↓

Turn the ignition switch OFF.

Install the compressor clutch relay.

Connect the test harness "A" connector to the wire harness only, not the ECM. (see section 11).

Turn the ignition switch ON.

Using a jumper wire, connect A15 test harness terminal to body ground.

Does the compressor clutch engage?

- NO → **Repair open in the RED/BLU wire between the compressor clutch relay and the ECM.**
- YES ↓

Substitute a known-good the ECM and recheck.
If symptom/indication goes away, replace original the ECM.

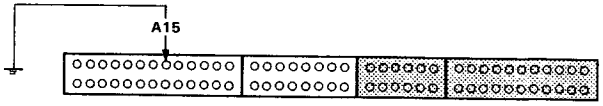

TEST HARNESS
07LAJ—PT3010A

Troubleshooting

Flowchart—A/C System

A/C system does not work (compressor and both fan motors).

Check fuses No. 7 (7.5 A), No. 34 (15 A), No. 38 (15 A).

*No. 7 (7.5 A) fuse: In the under-dash fuse/relay box.
No. 34 (15 A), No. 38 (15 A) fuses: In the under-hood fuse/relay box.

Are fuses OK? — NO → Replace the fuse.

YES

Check the self-diagnosis circuit (see page 22-11).

Does the A/C LED light indicates code 1? — YES → Go to evaporator temperature sensor troubleshooting (see page 22-16).

NO

Remove the heater control AMP.

Disconnect the 14P connector from heater control AMP.

Turn the ignition switch ON.

Measure voltage between the PNK wire terminal (+) and body ground (−).

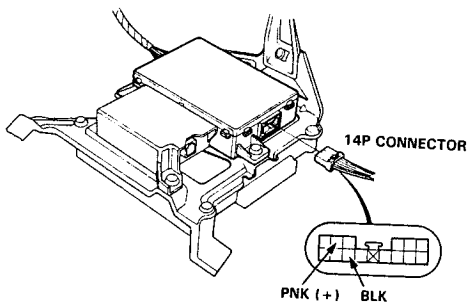

View from wire side

Is there battery voltage? — NO → To page 22-47

YES

Turn the ignition switch OFF.

Check for continuity between the BLK wire terminal and body ground.

Is there continuity? — NO → Check for an open in one of the two BLK wires between the heater control AMP and body ground. If the wires are OK, check for a poor ground at G401.

YES

Substitute a known-good heater control AMP and recheck. If symptom/indication goes away, replace original heater control AMP.

From page 22-46

Turn the ignition switch OFF.

Connect the test harness between the ECM and connector. (see section 11)

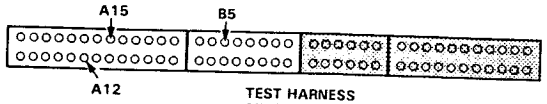

TEST HARNESS
07JGG—001010A

Turn the ignition switch ON.

Measure voltage between test harness terminal B5 and body ground.

Is there battery voltage? — NO → Using a jumper wire, connect A12 test harness terminal to body ground.

Do both fan motors run? — NO → See page 22-42

YES

Using a jumper wire, connect A15 test harness terminal to body ground.

Does the compressor clutch engage? — NO → See page 22-44

YES

Substitute a known-good the ECM and recheck. If symptom/indication goes away, replace original the ECM.

YES

Turn the ignition switch OFF.

Reconnect the four connectors to the ECM.

Disconnect the 2P connector from A/C pressure switch.

Turn the ignition switch ON.

Measure voltage between the BLU/BLK wire terminal (+) and body ground.

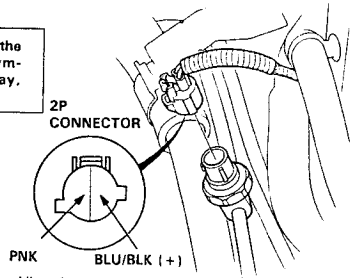

View from terminal side

Is there battery voltage? — NO → Repair open in the BLU/BLK wire between the A/C pressure switch and the ECM.

YES

Check for continuity between the No. ① and No. ② terminal of A/C pressure switch.

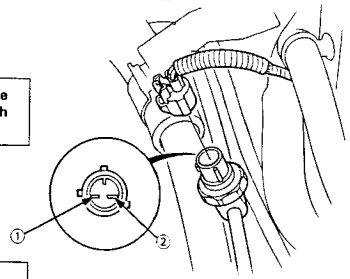

Is there continuity? — NO → Check the A/C system pressure. If pressure is OK, replace the A/C pressure switch.

YES

Repair open in the PNK wire between the A/C pressure switch and the heater control AMP.

Heater Control Panel

Removal

1. Remove the cap and screw, then pull out the heater control panel.
2. Disconnect the heater control panel connector.

   CAUTION: Be careful not to damage the dashboard.

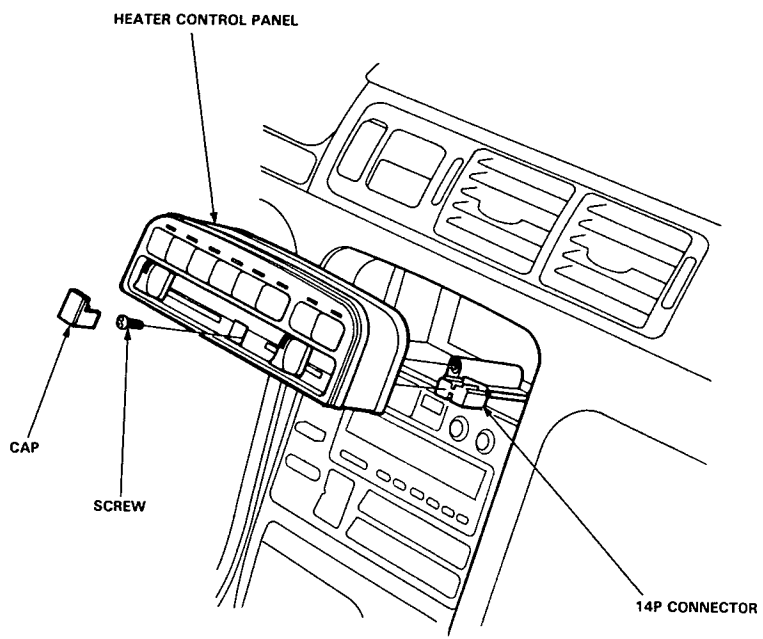

Heater-Evaporator Unit

Replacement

SRS wire harness is routed near the heater-evaporator.

CAUTION:
- **All SRS electrical wiring harnesses are covered with yellow outer insulation.**
- **When disconnecting the SRS wire harness install the short connector on the airbag then disconnect the wire harness (see page 23-330).**
- **Replace the entire affected SRS harness assembly if there is an open circuit or damage to the wiring.**

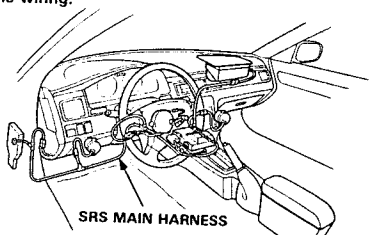

1. Remove the dashboard. (see section 20).
2. When the engine is cool, drain the engine coolant from the radiator. (see section 10).

WARNING
- **Do not remove the radiator cap when the engine is hot; the engine coolant is under pressure and could severely scald you.**
- **Keep hands away from the radiator fan. The fan may start automatically without warning and run for up to 30 minutes, even after the engine is turned off.**

CAUTION: Engine coolant will damage paint. Quickly rinse any spilled engine coolant off painted surfaces.

3. Disconnect the heater hoses at the heater. Engine coolant will run out when the hoses are disconnected; drain it into a clean drip pan.
4. Release the clamps, then disconnect the heater hoses.

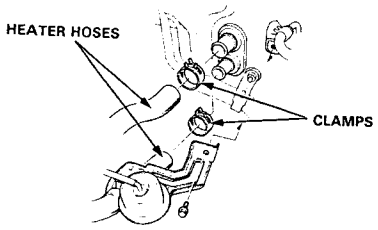

5. Remove all refrigerant from the A/C system with a refrigerant recovery system (see page 22-66).
6. Disconnect the receiver line and the suction line from the evaporator.

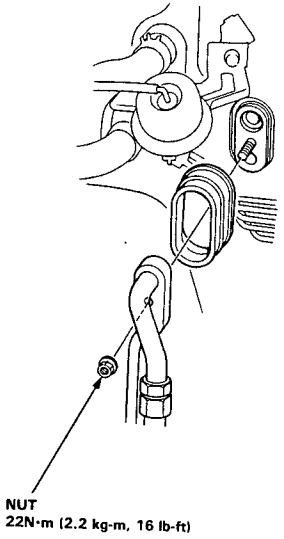

7. Remove the heater-evaporator unit mounting nut from the engine compartment side.

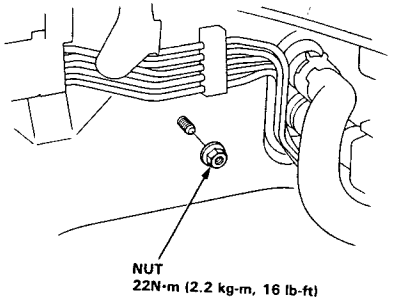

8. Remove the duct and disconnect the connector, then remove the heater-evaparator unit mounting bolts.

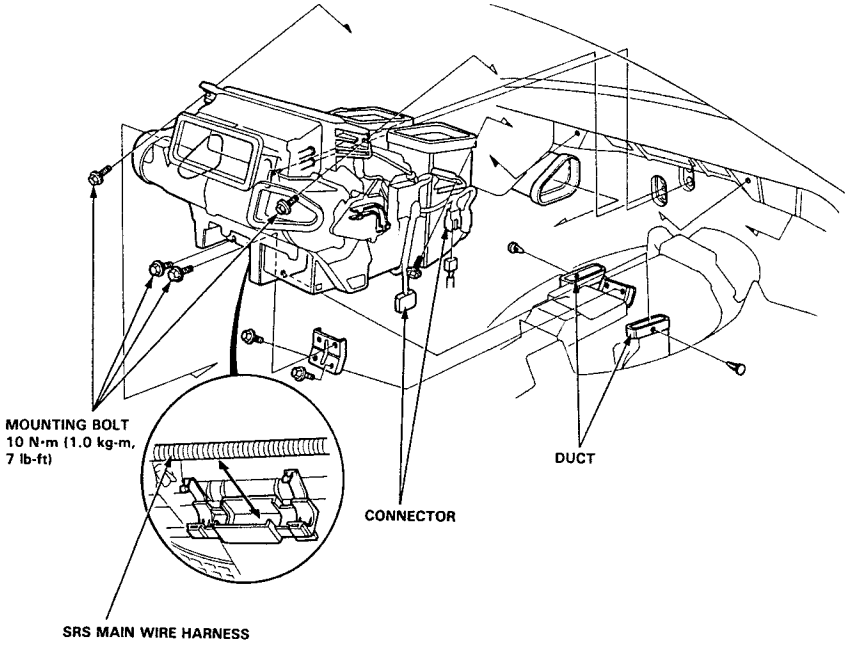

9. Install in the reverse order of removal, and:
   - Apply sealant to the A/C line grommets.
   - Do not interchange the inlet and outlet heater hoses. Make sure that the hose clamps are tight.

CAUTION: After reinstalling the heater-evaporator unit, follow the sequence described in the air bleed procedure. If you don't, you may leave air in the system which could damage the engine.

Blower Motor

Replacement

1. Remove the heater-evaporator unit. (see page 22-50)

2. Remove the mounting screw, then remove the pipe cover.

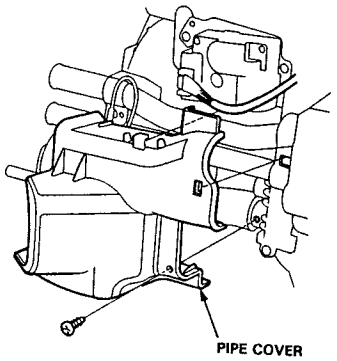

3. Remove the mounting screws, then remove the pipe clamp and pipe cover.

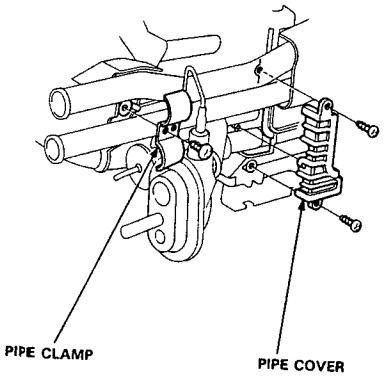

4. Disconnect the recirculation control motor connector.
Remove the mounting screws, then remove the recirculation control motor.

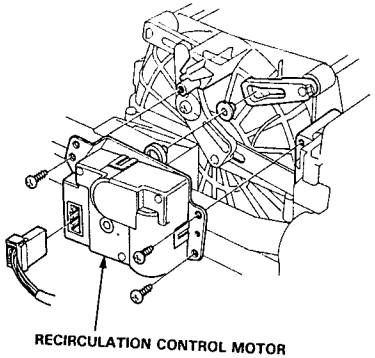

5. Remove the mounting screw, then remove the left side heater duct.

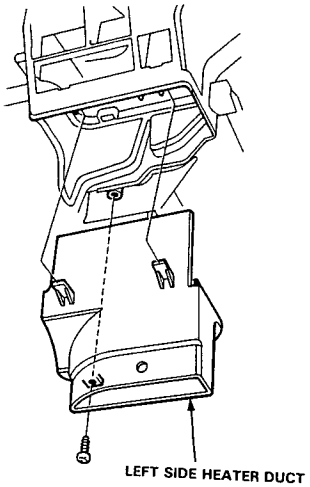

6. Disconnect the blower motor connector.

7. Remove the lower half of the housing, then remove the blower motor.

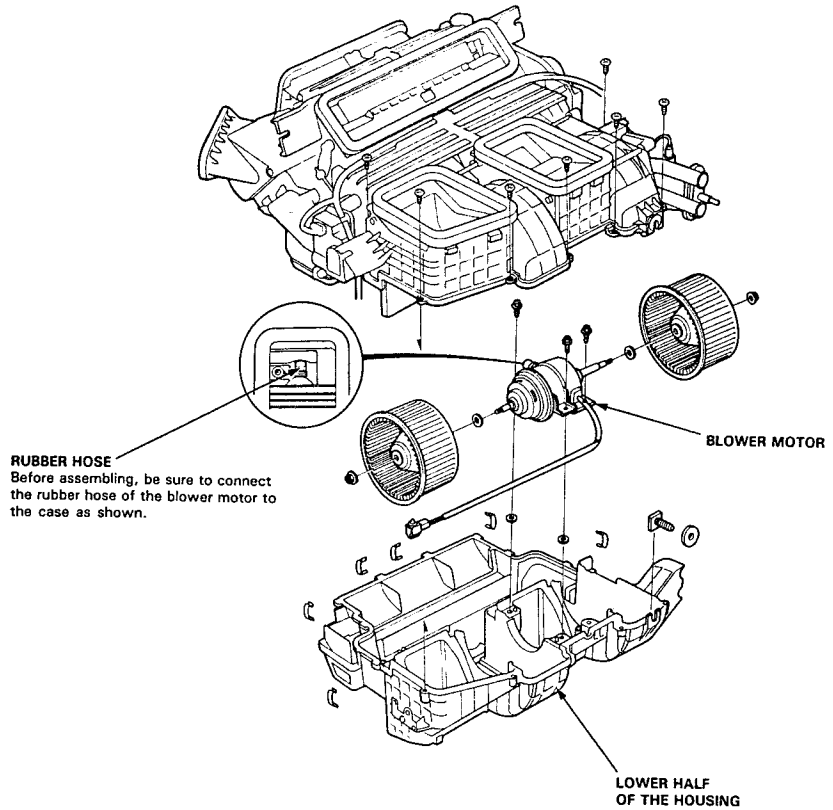

8. Install the blower motor in the reverse order of removal, then make sure it runs and doesn't leak any air.

Heater Core

Replacement

1. Remove the heater-evaporator unit. (see page 22-50)

2. Remove the mounting screw, then remove the air duct.

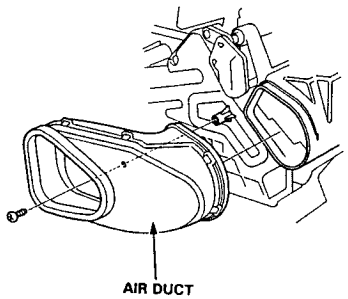

3. Remove the mounting screw, then remove the pipe cover.

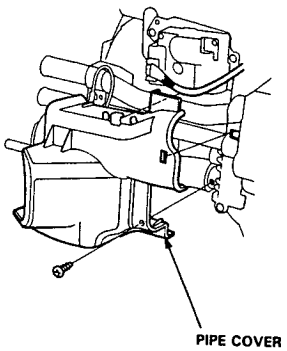

4. Remove the mounting screws, then remove the pipe clamp and pipe cover.

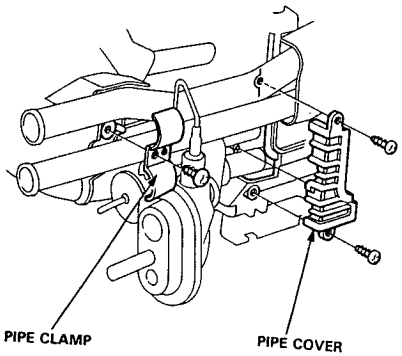

5. Unhook the clip from mode control motor rod, then remove its mounting screws and mode control motor.

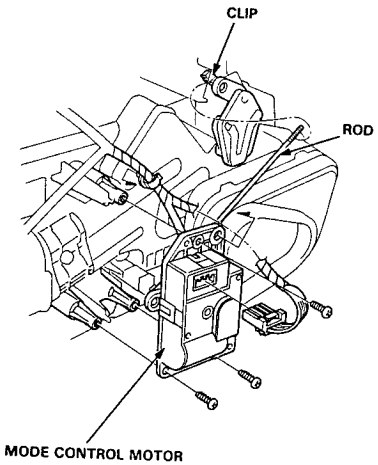

6. Remove the mounting screw, then remove the evaporator sensor.

7. Remove the mode door arms, then remove its mounting screws and left side cover.

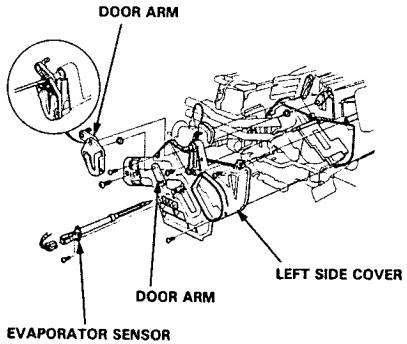

8. Remove the heater core cover, then pull out the heater core.

   NOTE: Be careful not to bend the inlet and outlet pipes during heater core removal.

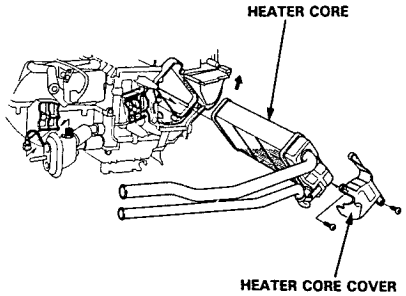

9. Install in the reverse order of removal and:
   - Loosen the bleed bolt on the engine, and refill the radiator and reservoir tank with the proper engine coolant mixture (see section 10).
   - Tighten the bleed bolt when all the trapped air has escaped and engine coolant begins to flow from it.

   NOTE: Be sure to bleed the cooling system with the heater valve fully open.

Evaporator

Replacement

1. Remove the heater-evaporator unit. (see page 22-50)
2. Remove the mounting screw, then remove the pipe cover.

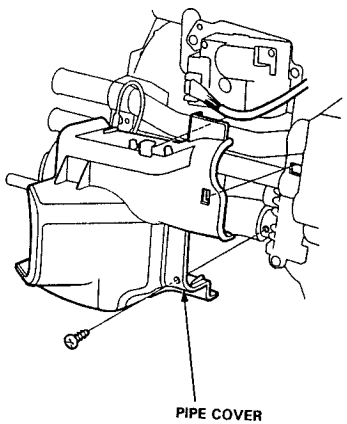

3. Remove the mounting screws, then remove the pipe clamp and pipe cover.

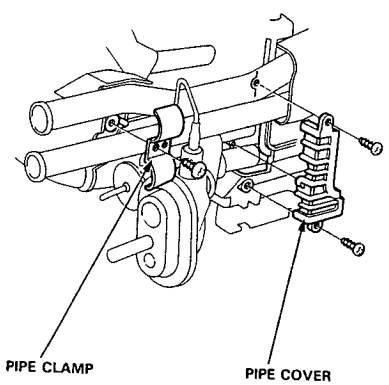

4. Remove the mounting screw, then remove the left side heater duct.

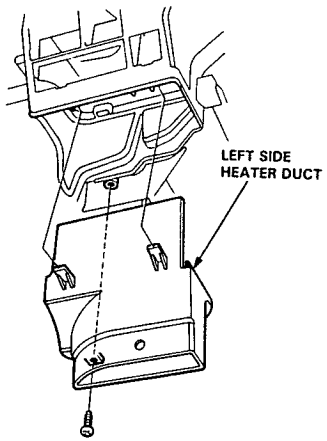

5. Remove the blower motor HIGH relay.

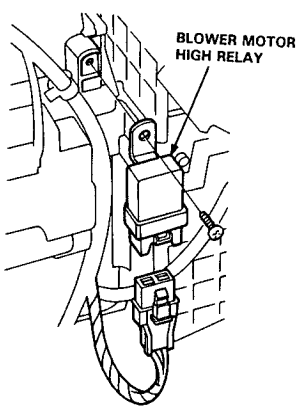

6. Remove the self-tapping screws and clips, then carefully separate the heater-evaporator housings and remove the evaporator.
7. Remove the expansion valve if necessary.
8. Assemble the heater-evaporator unit the reverse order of disassembly. Hold the expansion valve capillary tube down against the suction line, and wrap tape hold it there.

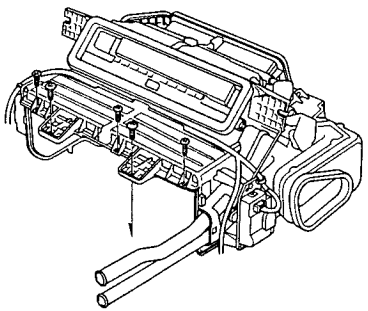

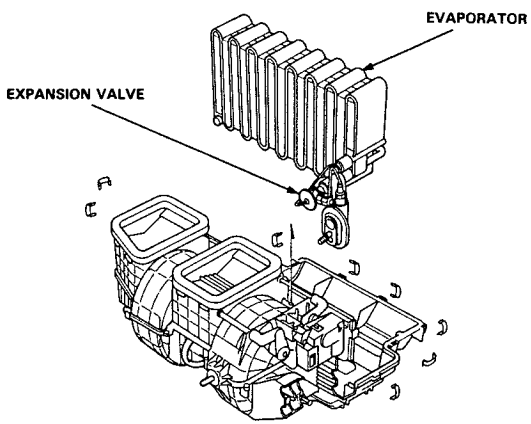

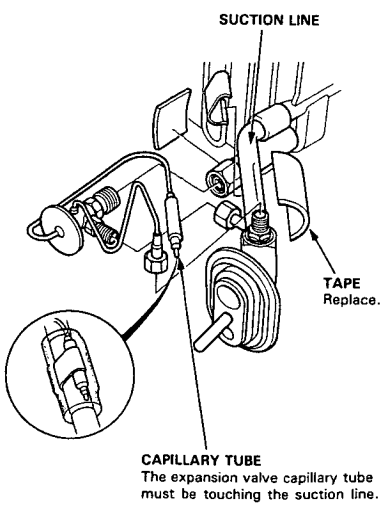

Evaporator Temperature Sensor

Removal

1. Disconnect the evaporator temperature sensor connector.
   Remove the evaporator temperature sensor by removing the screw.

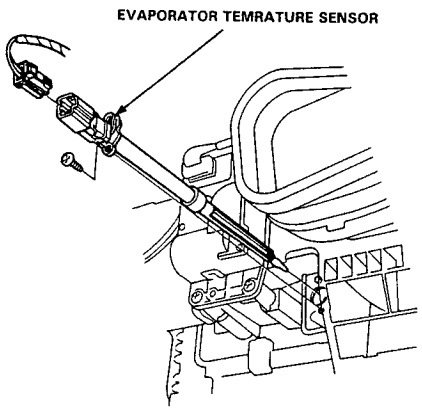

Test

Compare the resistance reading between terminals of the evaporator temperature sensor with the specification shown in the following graph: It should be within specification.

NOTE: Dip the sensor in ice water and measure the resistance, then pour hot water on the sensor and check for change in resistance.

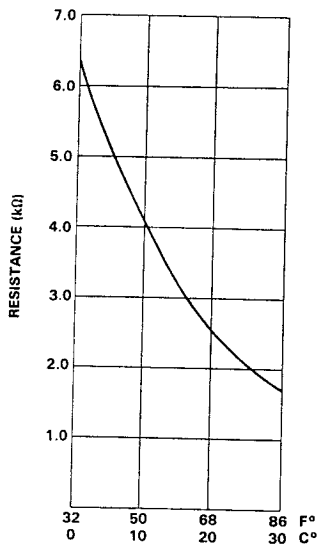

CAUTION: The sensor uses a thermistor which can be damaged if high current is applied to it during testing. Therefore, use a circuit tester that puts out a measuring current of 1 mA or less.

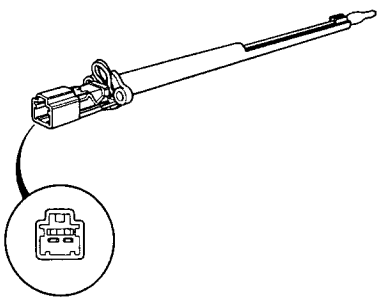

Air Mix Control Motor

Removal

1. Remove the screw and cover.

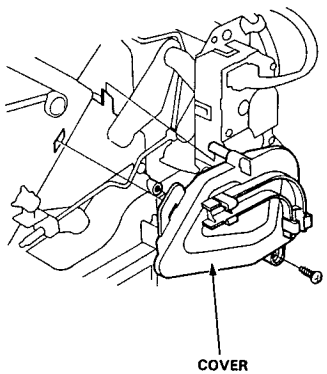

2. Disconnect the air mix control motor connector.
3. Unhook the clips from the air mix control motor rod, then remove its mounting screws and air mix control motor.

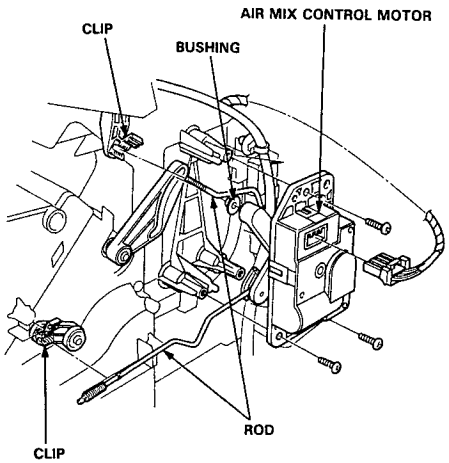

Test

1. Measure the resistance between the No. 3 and 5 terminals.
   - Resistance: approx. 10 KΩ
2. Check the air mix control motor operation by briefly connection the battery (12 V) positive to the No. 2 terminal and negative to the No. 1 terminal.

   NOTE: If the air mix control motor does not run, remove it, and check the air mix control motor links for smooth operation. If the air mix control motor links operate normally, replace the air mix control motor.
3. Reverse the wires to be sure the air mix control motor will run in both directions.

   CAUTION: Be sure to disconnect the battery from the air mix control motor as soon as the air mix control motor has started. Failure to do so will damage air mix control motor.
4. Connect a battery (12 V) to the air mix control motor (positive to No. 2 and negative to No. 1), and measure the resistance between the terminals No. 4 and No. 5.
   Resistance should be approximately approx. 8.7 KΩ at COOL an approx. 1.0 KΩ at HOT. Also check the resistances with the battery polarity reversed.

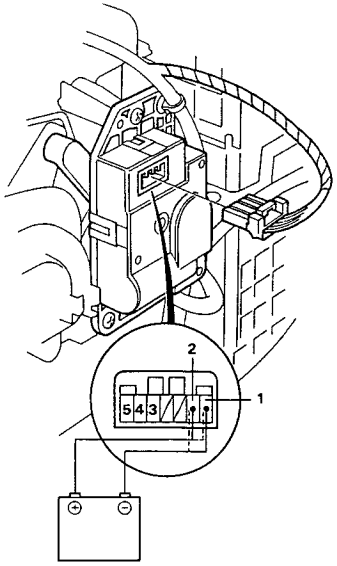

Mode Control Motor

Removal

1. Disconnect the mode control motor connecter.
2. Unhook the clip from the mode control motor rod, then remove its mounting screws and mode control motor.

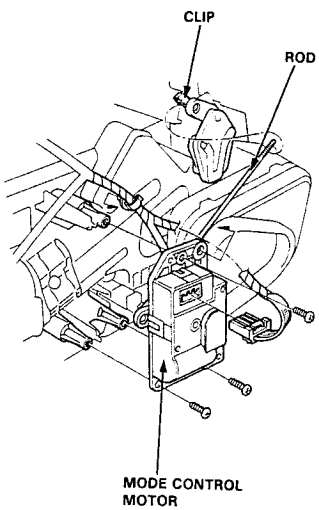

Test

1. Disconnect the mode control motor connector, turn the ignition switch ON and move the blower switch to the middle setting.
2. Connect battery power to the No. 1 terminal of the mode control motor, and connect ground to the No. 2 terminal. The mode control motor should run, and stop at VENT.
   If it doesn't, reverse the connections; the mode control motor should run, and stop at DEF.

   NOTE: If the mode control motor does not run, remove it, and check the mode control linkage and doors for smooth movement. If the mode control linkage and doors move smoothly, replace the mode control motor.

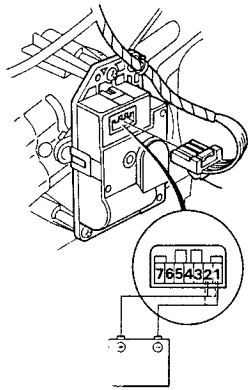

3. Plug the connector back into the motor. Operate the mode switch on the heater control panel to each mode. Verify that the mode control motor has moved to the selected position by checking the air flow for the mode selected.

   NOTE: If the motor did not move, turn the ignition switch OFF and disconnect the mode control motor connector. Turn the ignition switch ON and connect battery power to No. 1 and No. 2 terminals as shown in step 2. Power the mode control motor to move the doors to the mode selected.
4. Disconnect the mode control motor connector at each mode selected and check for continuity between the motor terminals according to the table below.
5. Replace the mode control motor if there is no continuity for any one mode selected.

Terminal / LED symbol	3	4	5	6	7
	○	○	○	○	
	○	○			
	○			○	
	○		○		
	○				○

Recirculation Control Motor

Removal

1. Remove the mounting scew, then remove the pipe cover.

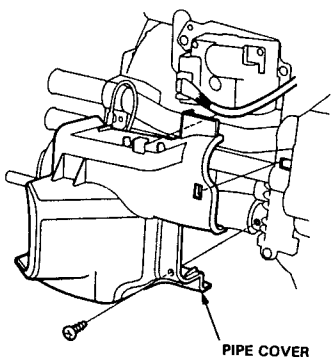

2. Disconnect the recirculation control motor connector.

3. Remove its mounting screws and the recirculation control motor.

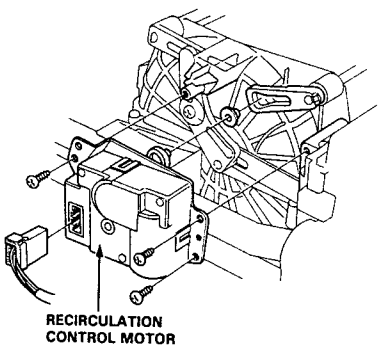

Test

1. Connect battery power to No. 1 terminal of the recirculation control motor, and connect the No. 2 terminal to ground.
The motor should run. If it doesn't, reverse the connections; the motor should then run.

NOTE: If the recirculation control motor does not run remove it, and check the recirclation control motor links for smooth operation. If the recirculation control motor links operate normally, replace the recirclation control motor.

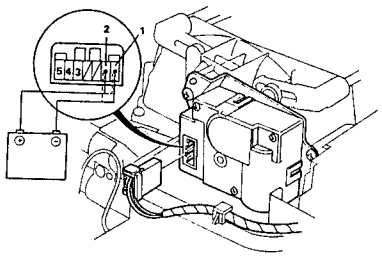

2. Check for continuity between the terminals of the recirculation control motor according to this table.

Position \ Terminal	3	4	5
	○	○	
	○		○

Heater-Evaporator Door Adjustments

Mode Door

1. To adjust the mode control motor rod, locate the door guide plate with pin, then secure the rod with a clip as shown.

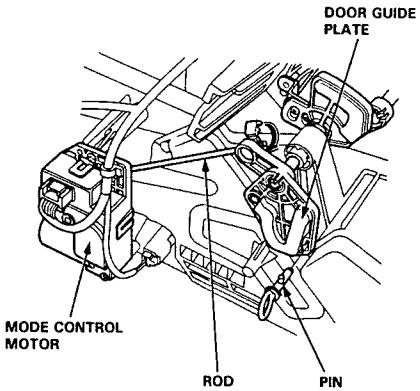

2. After adjusting the rod, adjust the defroster door as shown.

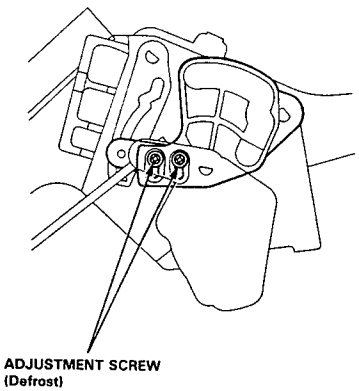

Air Mix Door

Adjust the air-mix control motor rod so the linkage looks like this in the cold position.

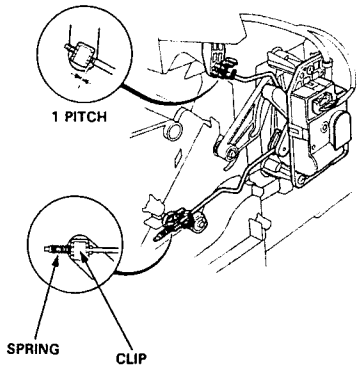

Relay

Test

There should be continuity between the A and B terminals when the battery is connected to the C and D terminals.
There should be no continuity when the battery is disconnected.

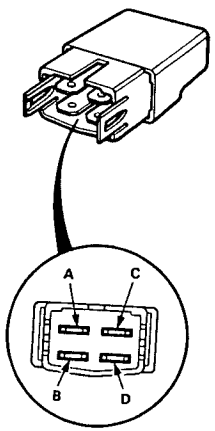

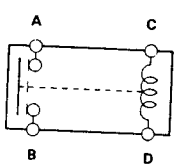

Heater Valve

Test

1. Check for continuity between No. ① and No. ② terminals at the heater valve solenoid 4P connector.

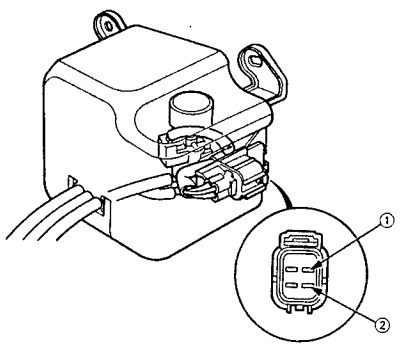

2. After assembling the heater valve solenoid and heater valve, perform the following to check that they are assembled properly:

   (1) Connect the heater valve solenoid to the heater valve with a tube.
   (2) Connect the positive cable of a battery to No. ② terminal of the heater valve solenoid valve, and the negative cable to No. ① terminal.
   (3) Check that the rod of the heater valve is pulled toward the diaphragm when negative pressure is applied to the heater valve solenoid with a vacuum pump.
   (4) Check that the rod is returned to the original position when the battery cables are disconnected from the terminals.

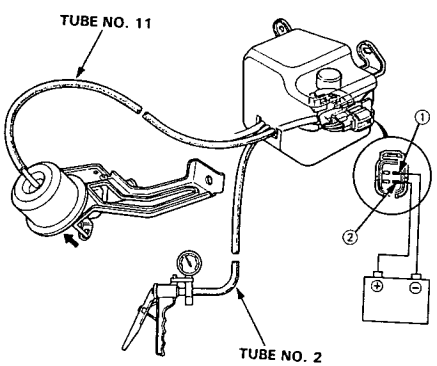

A/C Service Trips and Precautions

⚠WARNING

When handling refrigerant (R-12):

- **Always wear eye protection.**
- **Do not let refrigerant get on your skin or in your eyes. If it does:**
  - **Do not rub your eyes or skin.**
  - **Splash large quantities of cool water in your eyes or on your skin.**
  - **Rush to a physician or hospital for immediate treatment. Do not attempt to treat it yourself.**
- **Keep refrigerant containers stored below 104°F (40°C).**
- **Do not handle or discharge refrigerant in an enclosed area near an open flame; it may ignite and produce a poisonous gas.**
- **Chlorine from chemicals called chlorofluorocarbons (CFCs) destroy the ozone in the stratosphere. Automotive air conditioning systems currently use chlorofluorocarbons as the refrigerant. Auto air conditioning service equipment has been developed to minimize the release of CFCs to the atmosphere. All service procedures should be performed using this equipment and the manufacturer's instructions.**

1. Always disconnect the negative cable from the battery whenever replacing air conditioning parts.
2. Keep moisture and dust out of the system. When disconnecting any lines, plug or cap the fittings immediately; don't remove the caps or plugs until just before you reconnect each line.
3. Before connecting any hose or line, apply a few drops of refrigerant oil (ND OIL 6) to the O-ring.
4. When tightening or loosening a fitting, use a second wrench to support the matching fitting.
5. When discharging the system, use a Refrigerant Recovery/Recycling System; don't release refrigerant into the atmosphere.
6. Add refrigerant oil (ND OIL 6) after replacing the following parts:
   Condenser ..... 15 cc (2/3 fl oz)
   Evaporator ..... 30 cc (1/2 fl oz)
   Line or hose ..... 10 cc (1/3 fl oz)
   Receiver/dryer ..... 10 cc (1/3 fl oz)
   Compressor ..... On compressor replacement, subtract the volume of oil drained from the removed compressor from 140 cc (4-2/3 fl oz), and drain the calculated volume of oil from the new compressor: 140 cc (4-2/3 fl oz)—Volume of oil from removed compressor = Volume to drain from new compressor.

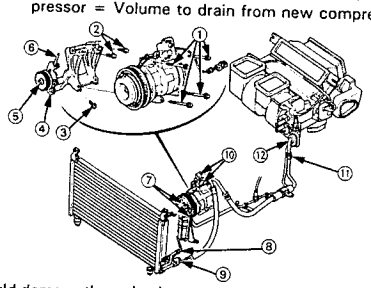

Don't overtighten fittings; you could damage them. Leaks are caused by faulty O-rings; overtightening won't stop them.

① Compressor mounting bolts ..... 25 N·m (2.5 kg-m, 18 lb-ft)
② Compressor bracket mounting bolts (10 x 30) ..... 48 N·m (4.8 kg-m, 35 lb-ft)
③ Compressor bracket mounting bolt (10 x 60) ..... 48 N·m (4.8 kg-m, 35 lb-ft)
④ Idler pulley bracket bolts (8 x 16) ..... 35 N·m (3.5 kg-m, 25 lb-ft)
⑤ Idler pulley center nut ..... 48 N·m (4.8 kg-m, 35 lb-ft)
⑥ Adjusting bolts (8 x 115) ..... 8 N·m (0.8 kg-m, 5.8 lb-ft)
⑦ Receiver/dryer ..... 14 N·m (1.4 kg-m, 10 lb-ft)
⑧ Condenser pipe to condenser ..... 14 N·m (1.4 kg-m, 10 lb-ft)
⑨ Discharge hose to condenser ..... 22 N·m (2.2 kg-m, 16 lb-ft)
⑩ Compressor hose mounting bolt ..... 22 N·m (2.2 kg-m, 16 lb-ft)
⑪ Suction hose line ..... 33 N·m (3.3 kg-m, 24 lb-ft)

A/C System Service

Recovery

⚠WARNING

- **Keep away from open flames. The refrigerant, although nonflammable, will produce a poisonous gas if burned.**
- **Work in a well-ventilanted area. Refrigerant evaporates quickly, and can force all the air out of a small enclosed area.**

1. Connect a Refrigerant Recovery/Recycling System to the A/C system.

2. Operate the Refrigerant Recovery/Recycling System according to the manufacturer's instructions.

   IMPORTANT: Do not vent refrigerant to the atmosphere. The chlorofluorocarbons (CFCs) used in conventional refrigerant (R-12) may damage the earth's ozone layer.
   Always use UL-listed, refrigerant recovery/recycling equipment to extract the refrigerant before you open an A/C system to make repairs. Follow the equipment manufacturer's instructions.

REFRIGERANT RECOVERY RECYCLING SYSTEM

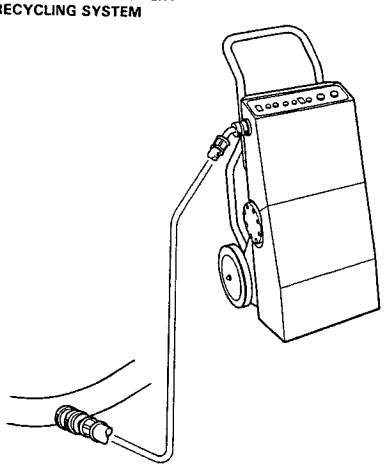

Performance Test

The performance test will help determine if the air conditioning system is operating within specifications.

1. Connect the hoses as shown.

2. Insert a thermometer in the center vent outlet. Determine the relative humidity and air temperature by calling the local weather information line.

3. Test conditions:
   - Avoid direct sunlight.
   - Open hood.
   - Open front doors.
   - Set the temperature control lever to MAX COOL and push the VENT and FRESH air buttons.
   - Turn the fan control lever to MAX.
   - Run the engine at 1,500 RPM.
   - No driver or passengers in vehicle.

4. After running the air conditioning for 10 minutes under the above conditions, read the delivery temperature from the thermometer in the dash vent and the high and low system pressure from the Air Conditioning Service Station.

5. To complete the charts:
   - Mark the delivery temperature along the vertical line.
   - Mark the intake temperature (air temperature) along the bottom line.
   - Draw a line straight up from the air temperature to the humidity.
   - Mark a point one line above and one line below the humidity level. (10% above and 10% below the humidity level)
   - From each point, draw a horizontal line across to the delivery temperature.
   - The delivery temperature should fall between the two lines.
   - Complete the low side pressure test and high side pressure test in the same way.

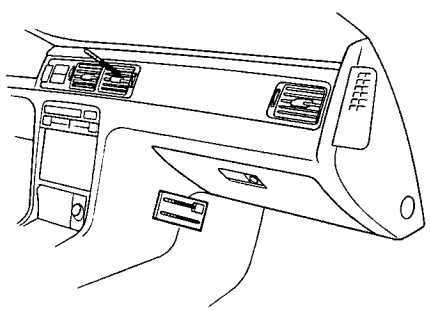

AIR CONDITIONING SERVICE STATION

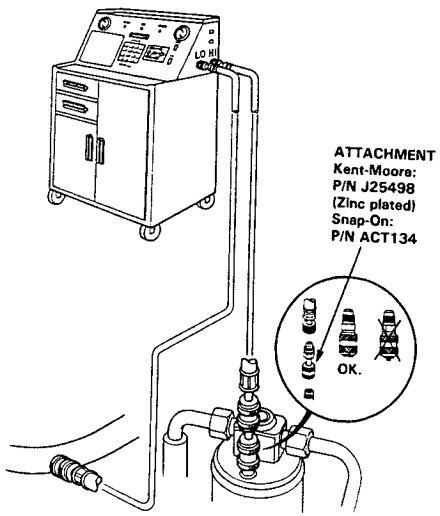

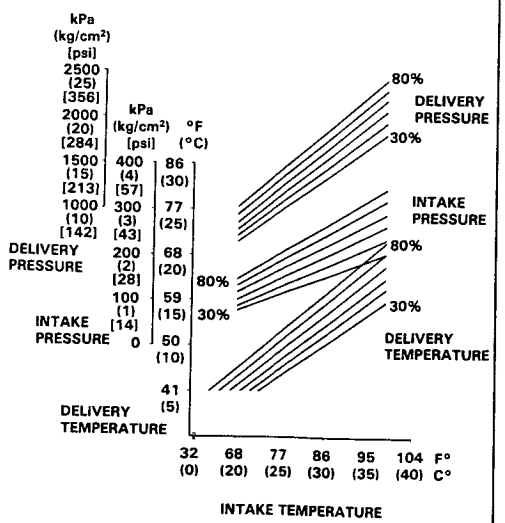

A/C System Service

Pressure Test Chart

TEST RESULTS	RELATED SYMPTOMS	PROBABLE CAUSE	REMEDY
Discharge (high) pressure abnormally high	After stopping compressor, pressure drops to about 200 kPa (2.0 kg/cm², 28 psi) quickly, and then falls gradually	Air in system	Evacuate system: then recharge Evacuation: page 22-78 Recharging: page 22-79
	No bubbles in sight glass when condenser is cooled by water	Excessive refrigerant in system	Recover, evacuate and recharge with specified amount.
	Reduced or no air flow through condenser	• Clogged condenser or radiator fins • Condenser or radiator fan not working properly	• Clean • Check voltage and fan rpm
	Line to condenser is excessively hot	Restricted flow of refrigerant in system	• Expansion valve • Restricted lines
Discharge pressure abnormally low	Excessive bubbles in sight glass; condenser is not hot	Insufficient refrigerant in system	• Check for leak • Charge system
	High and low pressures are balanced soon after stopping compressor	• Faulty compressor discharge or inlet valve • Faulty compressor seal	Replace
	Outlet of expansion valve is not frosted, low pressure gauge indicates vacuum	• Faulty expansion valve • Moisture in system	• Replace • Flush and evacuate
Suction (low) pressure abnormally low	Excessive bubbles in sight glass: condenser is not hot	Insufficient refrigerant	Check for leaks. Charge as required.
	Expansion valve is not frosted and low pressure line is not cold. Low pressure gauge indicates vacuum	• Frozen expansion valve • Faulty expansion valve	Replace expansion valve
	Discharge temperature is low and the air flow from vents is restricted	Frozen evaporator	Run the fan with compressor off then check capillary tube.
	Expansion valve frosted	Clogged expansion valve	Clean or Replace
	Receiver dryer is cool (should be warm during operation)	Clogged receiver dryer	Replace
Suction pressure abnormally high	Low pressure hose and check joint are cooler than around evaporator	• Expansion valve open too long • Loose expansion valve	Repair or Replace.
	Suction pressure is lowered when condenser is cooled by water	Excessive refrigerant is system	Recover, evacuate and recharge with specified amount.
	High and low pressure are equalized as soon as the compressor is stopped and both gauges fluctuate while running	• Faulty gasket • Faulty high pressure valve • Foreign particle stuck in high pressure valve	Replace compressor
Suction and discharge pressures abnormally high	Reduced air flow through condenser	• Clogged condenser or radiator fins • Condenser or radiator fan not working properly	• Clean condenser and radiator • Check voltage and fan rpm
	No bubbles in sight glass when condenser is cooled by water	Excessive refrigerant in system	Recover, evacuate and recharge with specified amount.
Suction and discharge pressure abnormally low	Low pressure hose and metal end areas are cooler than evaporator	Clogged or kinked low pressure hose parts	Repair or Replace
	Temperature around expansion valve is too low compared with that around receiver dryer	Clogged high pressure line	Repair or Replace
Refrigerant leaks	Compressor clutch is dirty	Compressor shaft seal leaking	Replace compressor
	Compressor bolt(s) are dirty	Leaking around bolt(s)	Tighten bolt(s) or replace compressor
	Compressor gasket is wet with oil	Gasket leaking	Replace compressor

Compressor

Description

This compressor is a Nippondenso piston type. A revolving inclined disc drives the surrounding 10 reciprocating pistons. As the inclined disc revolved, it pushes the pistons, protected by a ceramic shoe, thus compressing the refrigerant.

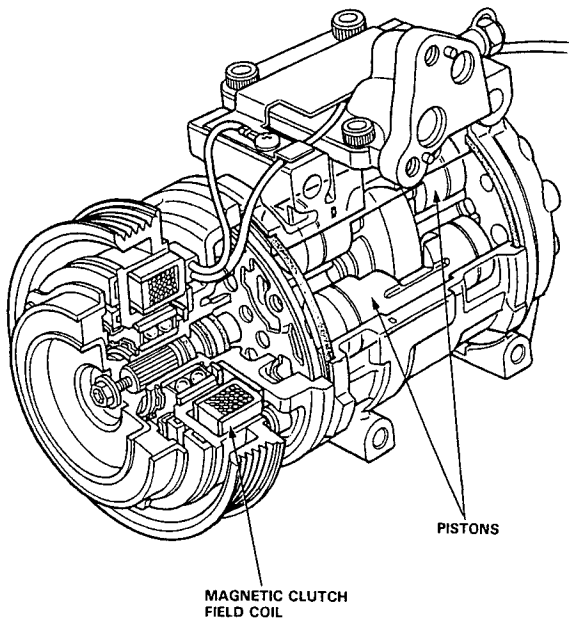

Compressor

Illustrated Index

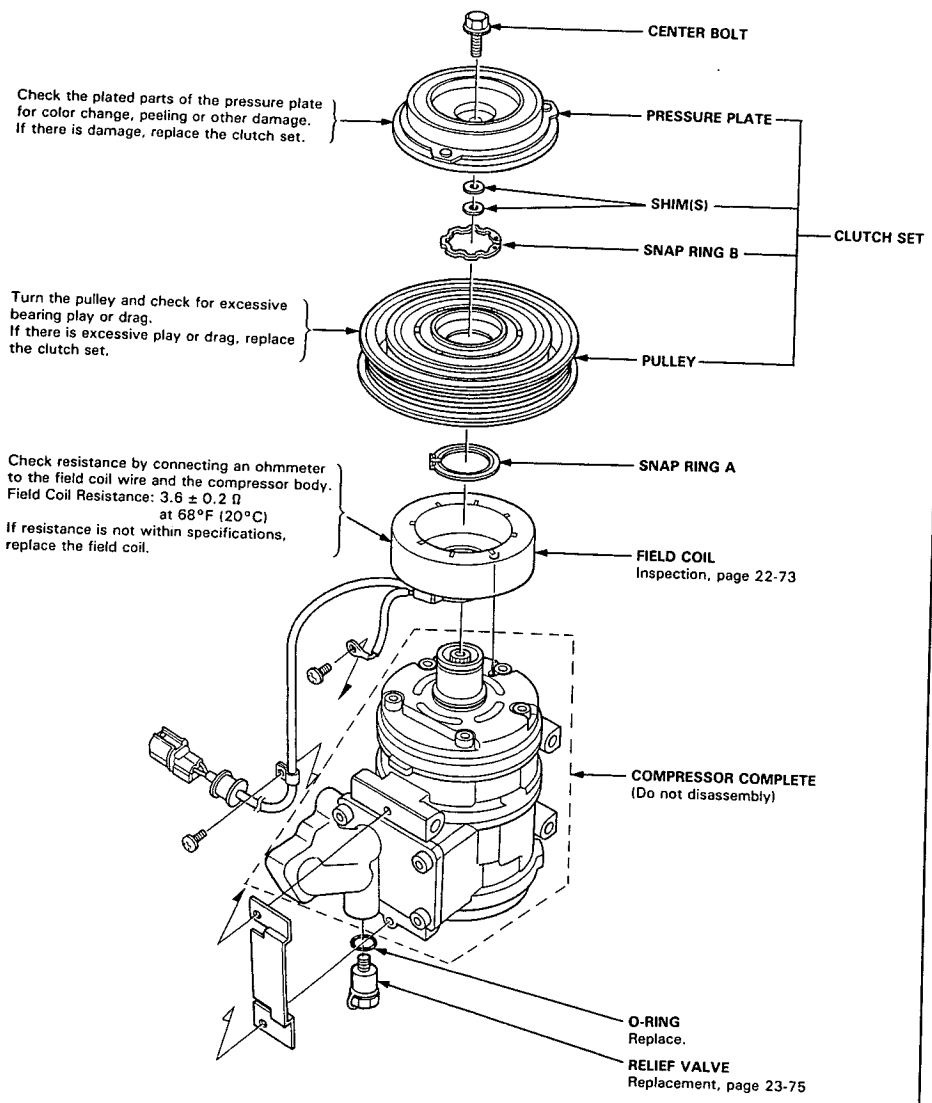

Replacement

1. If the compressor still works, run the engine at idle for a few minutes with the A/C on, then shut the engine off and disconnect the negative cable from the battery.
2. Use a Refrigerant Recovery/Recycling System to recover the refrigerant from the system (see page 22-66).
3. Disconnect the compressor connector.

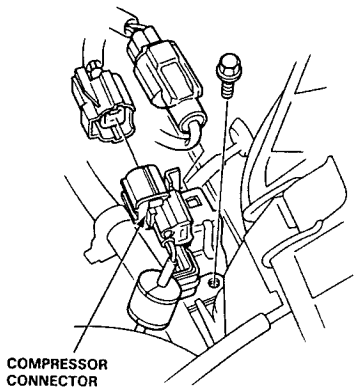

4. Disconnect the suction and discharge hoses from the compressor. Cap the open fittings immediately to keep moisture and dirt out of the system.

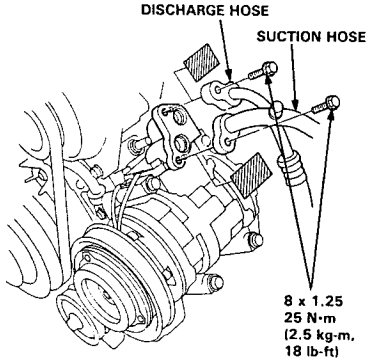

5. Loosen the idle pulley center nut and adjusting bolt, and remove the power steering oil pump belt (see section 17).
6. Loosen the idler pulley center nut and adjusting bolt, then remove the belt from compressor.

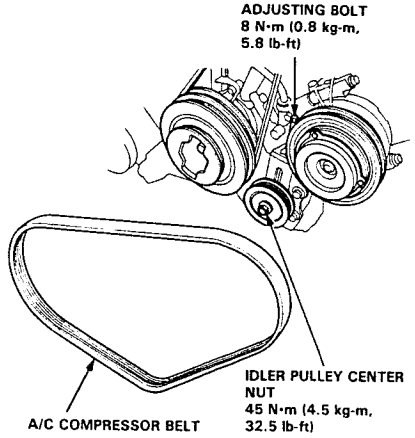

7. Remove the four compressor mounting bolts and compressor.

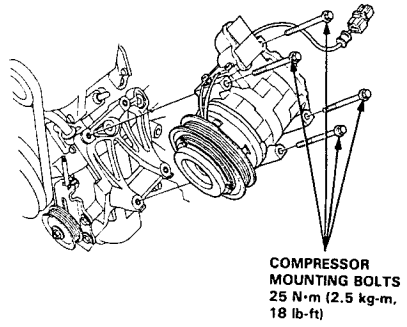

(cont'd)

Compressor

Replacement (cont'd)

8. If necessary, remove the three compressor bracket mounting bolts.

   NOTE: Before assembling, tighten the compressor bracket mounting bolts in the order of ① thru ③ and in two steps; first tighten temporarily, then torque to the specified tension after making sure that there is no clearance between the bracket and its mounting face.

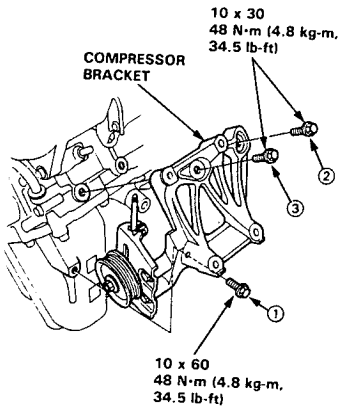

9. If necessary remove the idler pulley.

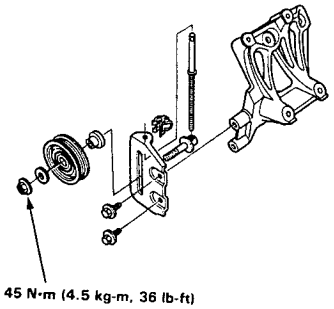

- Check the idler pulley bearing for play and drag. Replace it with a new one if it's noisy or has excessive play or drag.

10. Install in the reverse order of removal.
    If you're installing a new compressor, drain all the refrigerant oil out of the old compressor and measure its volume. Subtract the volume of old oil from 140 cc (4-2/3 oz); the result is the amount of oil you should drain from the new compressor (through the suction fitting).

11. Adjust the compressor belt (see page 22-76).
    After adjusting the belt, tighten the pulley center nut.
    Then tighten the adjusting bolt securely.

12. Charge the system (see page 22-79).

13. Test system performance (see page 22-67).

Clutch Inspection

1. Check pulley bearing play and drag by rotating the pulley by hand. Replace the clutch set with a new one if it is noisy or has excessive play/drag.

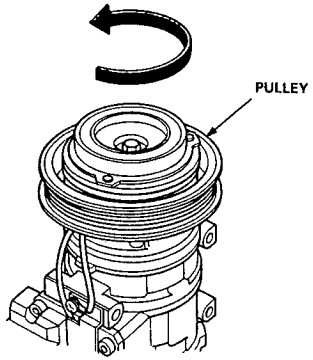

2. Check resistance of the field coil:

   Field Coil Resistance: 3.6 ± 0.2 ohm at 68°F (20°C)

   If resistance is not within specifications, replace the field coil.

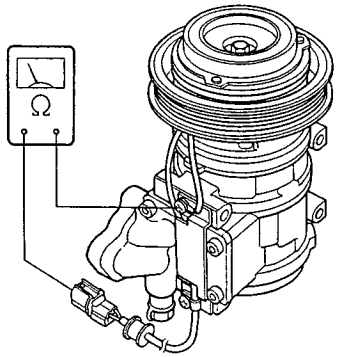

3. Measure the clearance between the pulley and pressure plate all the way around. If the clearance is not within specified limits, the pressure plate must be removed and shims added or removed as required, following the procedure on the next page.

   CLEARANCE: 0.5 ± 0.15 mm (0.020 ± 0.006 in)

   NOTE: The shims are available in three sizes: 0.1 mm, 0.3 mm and 0.5 mm of thickness.

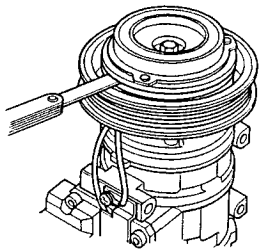

Compressor

Clutch Overhaul

1. Remove the center bolt.

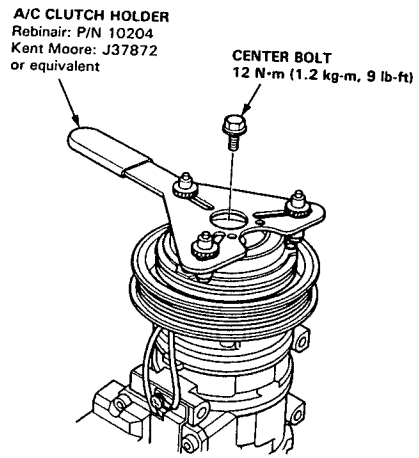

2. Remove the pressure plate and shim(s) taking care not to lose the shims.

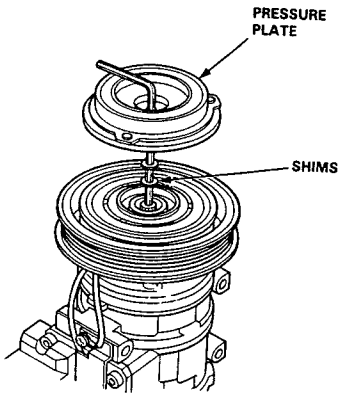

3. Use snap ring pliers to remove snap ring B, then remove the pulley.

NOTE:
- Be careful not to damage the pulley and compressor during removal/installation.
- Once the snap ring B is removed, replace it with a new one.

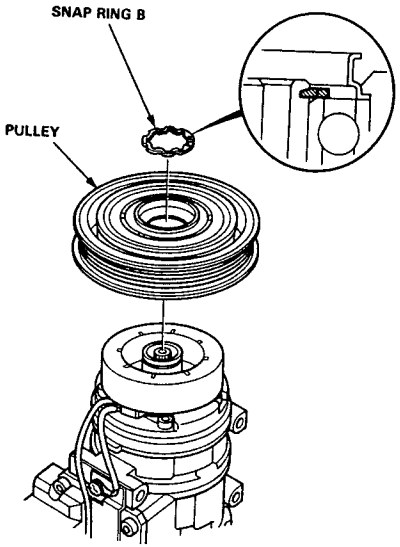

4. Remove snap ring A and the field coil.

NOTE:
- Be careful not to damage the field coil and compressor during removal/installation.
- Once the snap ring A is removed, replace it with a new one.

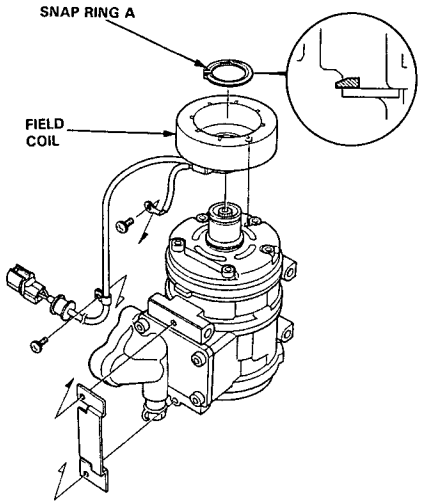

5. Install parts in the reverse order of removal, and:
   - Install the field coil with the wire side facing up (see above).
   - Clean the pulley and compressor sliding surfaces with non-petroleum solvent.
   - Check the pulley bearings for excessive play.
   - Make sure the snap rings are in the groove properly.
   - Apply locking agent to the threads on the center bolt.
   - Make sure that the pulley turns smoothly, after it's reassembled.

Relief Valve Replacement

1. Remove the relief valve and O-ring.

NOTE: Avoid letting any compressor oil run out.

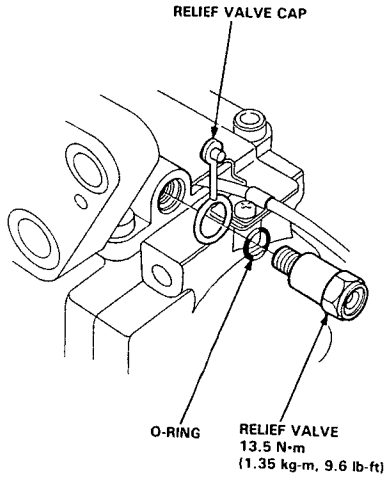

2. Clean off the mating surface.
3. Replace the relif valve O-ring with new one, and apply refrigerant oil to it.
4. Install and tighten the relief valve.
5. Charge the system and check for leaks, then push the cap into the valve.

Belt Adjustment

Compressor Belt

- "New belt" refers to a belt which has been used less than five minutes on a running engine.
- "Used belt" refers to a belt which has been used on a running engine for five minutes or more.

NOTE: Check for belt damage. If necessary, replace the belt.

Belt movement under 100 N (10 kg, 22 lbs) force	
New belt	Used belt
0.14–0.22 in (3.5–5.5 mm)	0.24–0.35 in (6.0–9.0 mm)

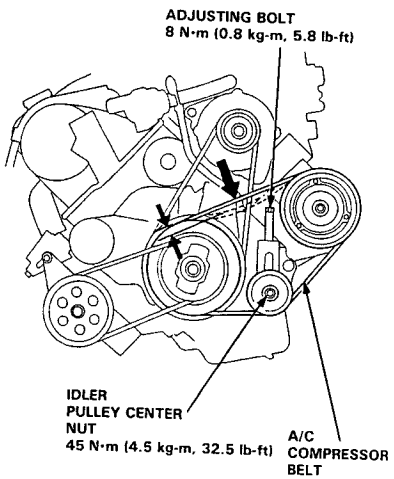

Power Steering Belt

- "New belt" refers to a belt which has been used less than five minutes on a running engine.
- "Used belt" refers to a belt which has been used on a running engine for five minutes or more.

NOTE: Check for belt damage. If necessary, replace the belt.

Belt movement under 100 N (10 kg, 22 lbs) force	
New belt	Used belt
0.18–0.26 in (4.5–6.5 mm)	0.26–0.35 in (6.0–9.0 mm)

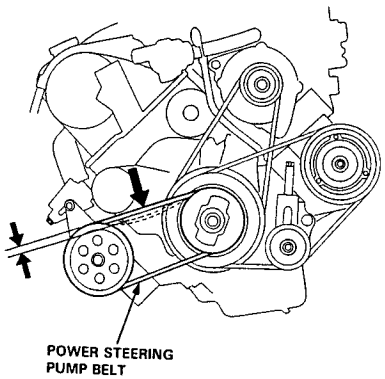

Condenser

Replacement

1. Use a Refrigerant Recovery/Recycling System to recover the refrigerant (see page 22-66).
2. Disconnect the connector from the radiator fan motor, remove the four mounting bolts and remove the radiator fan shroud.

   CAUTION: Do not damage the radiator fins when removing the fan shroud.

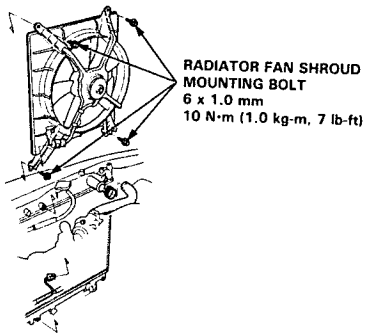

3. Disconnect the connector from the condenser fan motor, remove the four mounting bolts and remove the condenser fan shroud.

   CAUTION: Do not damage the radiator fins when removing the fan shroud.

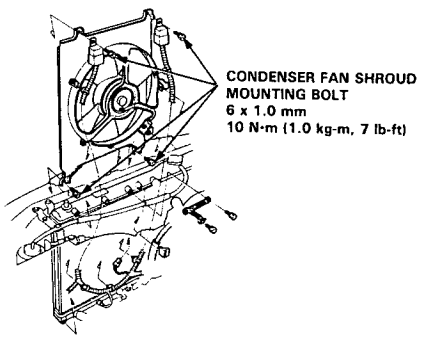

4. Remove the radiator upper mount brackets.

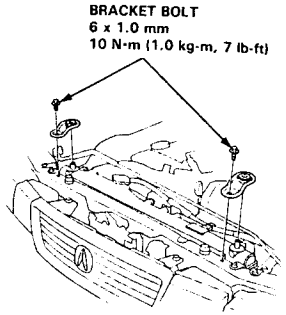

5. Disconnect the receiver dryer line and remove the three mounting bolts, then remove the receiver dryer.
6. Disconnect the discharge line from the condenser.

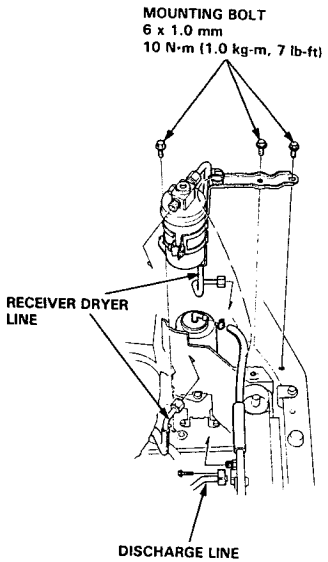

(cont'd)

Condenser

Replacement (cont'd)

7. Remove the two condenser mounting bolts, then lift out the condenser as shown.

   CAUTION: Do not damage the radiator and condenser fins when removing the condenser.

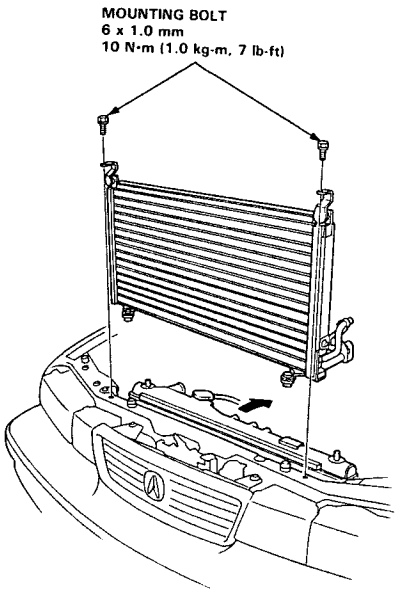

8. Install the condenser in reverse order of removal, and:
   - Replace all O-rings with new ones at the pipe joints, and apply refrigerant oil to them.
   - Charge the system (see page 22-79) and test its performance (see page 22-67).

A/C System Service

Evacuation

1. When an A/C System has been opened to the atmosphere, such as during installation or repair, it must be evacuated using a vacuum pump. (If the system has been open for several days, the receiver/dryer should be replaced).

2. Connect the Air Conditioning Service Station as shown. Follow the equipment manufacturer's instructions.

   NOTE:
   - Connect the high-side adapter to the high pressure hose first, then connect the hoses to the car as shown. When testing is completed, disconnect the high-side adapter from the highside fitting; do not disconnect the hose from the adapter, or refrigerant may escape from the system.
   - If low pressure does not reach more than 700 mmHg (27 in-Hg) in 15 minutes, there is probably a leak in the system. Partially charge the system and check for leaks (see Leak Test).

AIR CONDITIONING SERVICE STATION

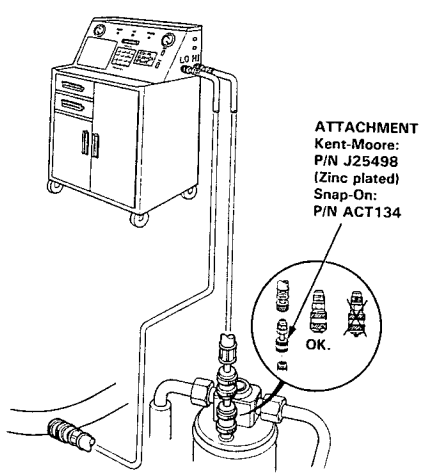

Charging

Refrigerant capacity: 800–850 g (28–30 oz)

WARNING Always wear eye protection when charging the system.

CAUTION: Do not overcharge the system; the compressor will be damaged.

Connect the Air Conditioning Service Station as shown. Follow the equipment manufacturer's instructions.

NOTE: Connect the high-side adapter to the high pressure hose first, then connect the hoses to the car as shown. When testing is completed, disconnect the high-side adapter from the high-side fitting; do not disconnect the hose from the adapter, or refrigerant may escape from the system.

AIR CONDITIONING SERVICE STATION

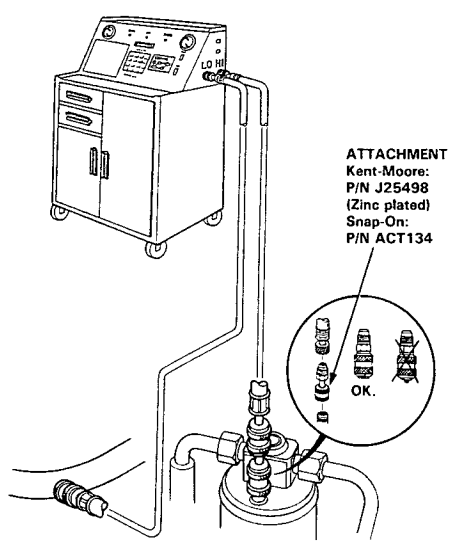

A/C System Service

Leak Test

⚠WARNING When handling refrigerant (R-12):

- Always wear eye protection.
- Do not let refrigerant get on your skin or in your eyes. If it does:
  - Do not rub your eyes or skin.
  - Splash large quantities of cool water in your eyes or on your skin.
  - Rush to a physician or hospital for immediate treatment. Do not attempt to treat it yourself.
- Keep away from open flame. Refrigerant, although non-flammable, will produce poisonous gas if burned.
- Work in well-ventiated area. Refrigerant evaporates quickly, and can force all the air out of a small, enclosed area.

IMPORTANT: Do not vent refrigerant to the atmosphere. The chlorofluorocarbons (CFCs) used in conventional refrigerant (R-12) may damge the earth's ozone layer. Always use UL-listed, refrigerant recovery/recycling equipment to extract the refrigerant before you open an A/C system to make repairs.
Follow the equipment manufacturer's instructions.

1. Connect the Air Conditioning Service Station as shown.

   NOTE: Connect the high-side adapter to the high pressure hose first, then connect the hoses to the car as shown. When testing is completed, disconnect the high-side adapter from the high-side fitting; do not disconnect the hose from the adapter, or refrigerant may escape from the system.

2. Open high pressure valve to charge the system to about 100 kPa (1 kg/cm², 14 psi), then close the supply valve.

3. Check the system for leaks using an electronic leak detector.
   Follow the manufacturer's instructions.

4. If you find leaks that require the system to be opened (to repair or replace hoses, fitting, etc.), recover the system according to the Recovery Procedure on page 22-66.

5. After checking and repairing leaks, the system must be evacuated (see System Evacuation on page 22-78).

AIR CONDITIONING SERVICE STATION

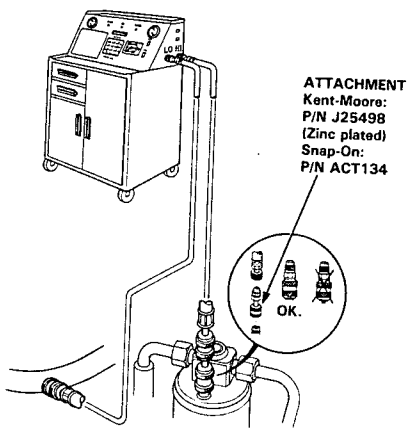

Read this before you do any electrical work on the car.

The VIGOR SRS includes a driver's side airbag, located in the steering wheel hub. In addition, the GS model has a front passenger's airbag located in the dashboard above the glove box. Information necessary to safely service the SRS is included in this Service Manual. Items marked with an asterisk (*) on the contents page include, or are located near, SRS components. Servicing, disassembling or replacing these items will require special precautions and tools, and should therefore be done by an authorized Acura dealer.

⚠WARNING

- **To avoid rendering the SRS inoperative, which could lead to personal injury or death in the event of a severe frontal collision, all maintenance must be performed by an authorized Acura dealer.**
- **Improper maintenance, including incorrect removal and installation of the SRS, could lead to personal injury caused by unintentional activation of the airbag (s).**
- **All SRS electrical wiring harnesses are covered with yellow outer insulation. Related components are located in the steering column, center console, dash, and dashboard lower panel, and in the dashboard above the glove box. Do not use electrical test equipment on these circuits.**

NOTE: The radio may have a coded theft protection circuit. Be sure to get the customer's code number before
– Disconnecting the battery.
– Removing the No. 39 (10 A) fuse in the under-hood fuse/relay box.
– Removing the radio.
After service, reconnect power to the radio and turn it on. When the word "CODE" is displayed, enter the customer's 5-digit code to restore radio operation.

Electrical

Special Tools 23-2
Troubleshooting
Tips and Precautions 23-3
Five-step Troubleshooting 23-5
How to Use This Section
Schematic Symbols 23-6
Wire Color Codes 23-6
Relay and Control Unit Locations
Engine Compartment 23-7
Dashboard 23-10
Seat 23-15
Trunk 23-16

Index to Circuits and Systems
Air Conditioning ..... Section 21
Anti-lock Brake System (ABS) ..... Section 19
Automatic Transmission System ..... Section 14
Battery 23-68
Blower Controls ..... Section 21
Charging System 23-110
*Cigarette Lighter 23-232
Clock 23-230
Connector Identification and Wire Harness Routing 23-17
*Cruise Control 23-290
Fuel Pump ..... Section 11
*Fuses 23-46
PGM-FI Control System ..... Section 11
*Gauges
Circuit Diagram 23-130
Engine Coolant Temperature (ECT) Gauge 23-141
Fuel Gauge 23-139
Speedometer 23-129
Tachometer 23-129
Grounds
Distribution 23-60
*Heater Controls ..... Section 21
*Horn 23-224
*Ignition Switch 23-73
Ignition System 23-98

*A/T Gear Position Indicator 23-174
*Safety Indicator 23-151
*Integrated Control Unit 23-164
*Interlock System 23-144
Lights, Exterior
Back-up Lights 23-200
Brake Lights 23-202
Daytime Running Lights (Canada) 23-176
Front Fog Light 23-175
Front Side Marker/Parking Lights 23-189
Headlights 23-198
License Plate Lights 23-191
Taillights 23-190
Lights, Interior
Ceiling Light 23-193
Courtesy Light 23-193
*Dash lights Brightness Controller 23-218
Rear Reading Light 23-193
Trunk Light 23-207
*Lighting System 23-172
Power Distribution 23-52
Power Door Locks 23-262
Power Mirrors 23-245
Power Relays 23-70
Power Seats 23-272
Power Windows 23-252
Moonroof 23-240
Radiator and Condenser Fan Controls 23-123
*Rear Window Defogger 23-235
Seat Heaters 23-276
*Side Marker/Turn Signal/Hazard Flasher System 23-208
Starting System 23-77
*Stereo Sound System 23-212
*Supplemental Restraint System (SRS) 23-323
*Under-dash Fuse/Relay Box 23-66
Vehicle Speed Sensor (VSS) 23-138
*Wiper/Washers 23-281
Wiring Diagrams 23-368

*Read SRS precautions on page 23-330, then install the short connector (s) on the airbag (s) before working in these areas.

Sect. 23 – Electrical

Special Tools

Ref. No.	Tool Number	Description	Qty.	Page Reference
①	KS-AHM-32-003	Digital Multimeter	1	23-329
②	07NAC-SR20100	Fuel Sender Wrench	1	23-140
③	07GAA-001000C	Antenna Nut Wrench	1	23-220
④*	07HAZ-SG00400	Deployment Tool	1	23-358
⑤**	07MAZ-SL00500	Test Harness A	1	23-339
⑥**	07MAZ-SP00500	Test Harness B	1	23-342
⑦*	07LAZ-SL40300	Test Harness C	1	23-343
⑧*	07LAZ-SL40400	Test Harness D	1	23-345

*: Included in SRS Tool Set 07MAZ-SM5000A
**: Included in SRS Tool Set 07MAZ-SL0010A

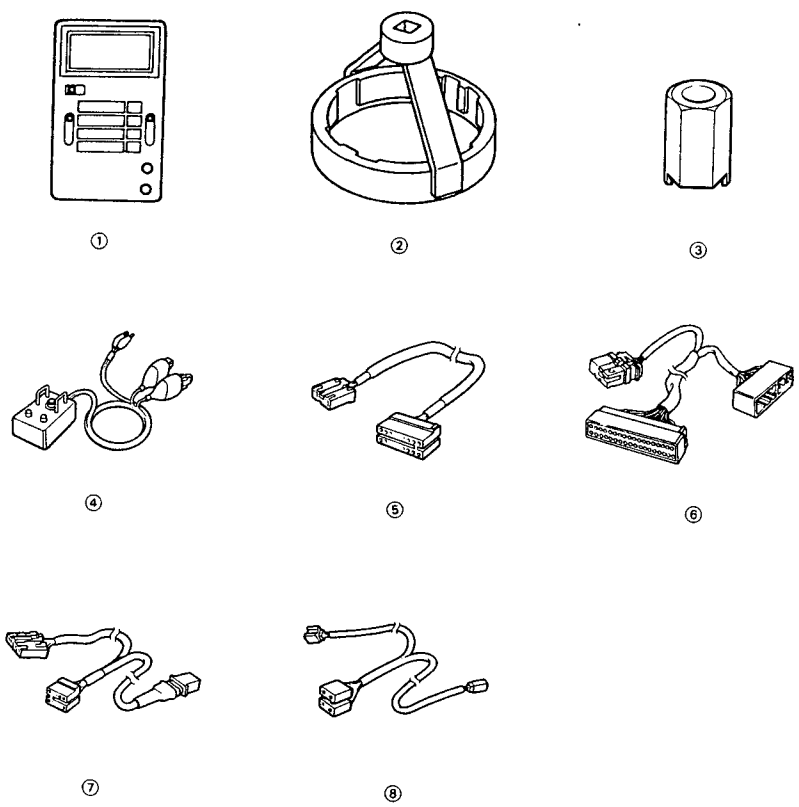

Troubleshooting

Tips and Precautions

Before Troubleshooting
- Check applicable fuses in the appropriate fuse/relay box.
- Check the battery for damage, state of charge, and clean and tight connections.
- Check the alternator belt tension.

CAUTION:
- **Do not quick-charge a battery unless the battery ground cable has been disconnected. Otherwise you will damage the alternator diodes.**
- **Do not attempt to crank the engine with the battery ground cable loosely connected or you will severely damage the wiring.**

Handling Connectors
- Make sure the connectors are clean and have no loose wire terminals.
- Make sure multiple cavity connectors are packed with grease (except watertight connectors).
- All connectors have push-down release type locks.

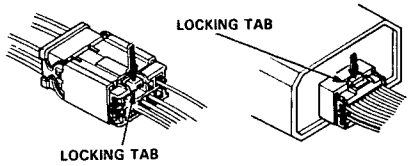

- Some connectors have a clip on their side used to attach them to a mount bracket on the body or on another component. This clip has a pull type lock.
- Some mounted connectors cannot be disconnected unless you first release the lock and remove the connector from its mount bracket.

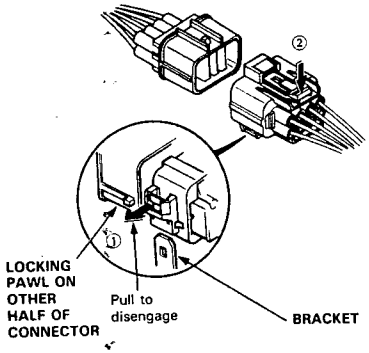

- Never try to disconnect connectors by pulling on their wires; pull on the connector halves instead.
- Always reinstall plastic covers.

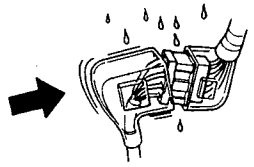

- Before connecting connectors, make sure the terminals are in place and not bent.

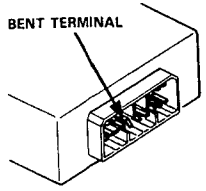

- Check for loose retainer and rubber seals.

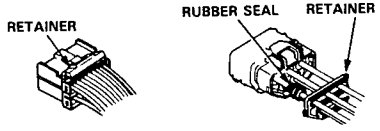

- The backs of some connectors are packed with grease. Add grease if necessary. If the grease is contaminated, replace it.

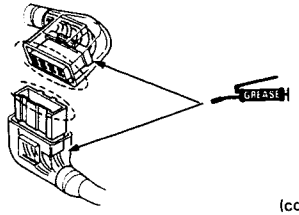

(cont'd)

Tips and Precautions (cont'd)

- Insert the connector all the way and make sure it is securely locked.
- Position wires so that the open end of the cover faces down.

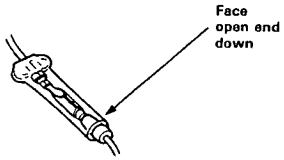

Handling Wires and Harnesses

- Secure wires and wire harnesses to the frame with their respective wire ties at the designated locations.
- Remove clips carefully; don't damage their locks.

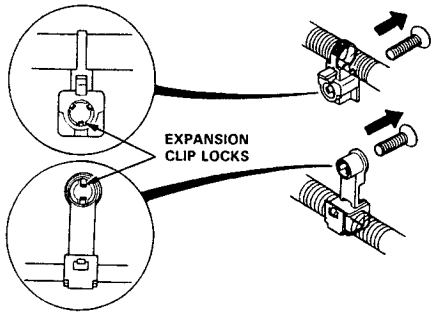

Slip pliers under the clip base and through the hole at an angle, then squeeze the expansion tabs to release the clip.

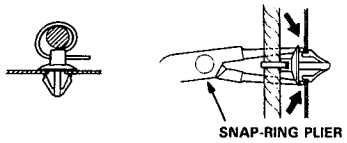

- After installing harness clips, make sure the harness doesn't interfere with any moving parts.
- Keep wire harnesses away from exhaust pipes and other hot parts, from sharp edges of brackets and holes, and from exposed screws and bolts.

- Seat grommets in their grooves properly.

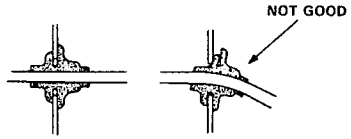

Testing and Repairs

- Do not use wires or harnesses with broken insulation. Replace them or repair them by wrapping the break with electrical tape.
- After installing parts, make sure that no wires are pinched under them.
- When using electrical test equipment, follow the manufacturer's instructions and those described in this manual.
- If possible, insert the probe of the tester from the wire side (except waterproof connector).

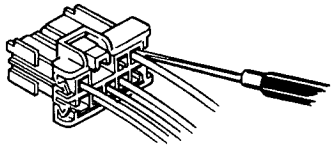

- Use a probe with a tapered tip.

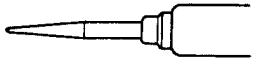

- Refer to the instructions in the Honda Terminal Pin Repair Kit for identification and replacement of connector terminals.

Five-step Troubleshooting

1. Verify The Complaint
   Turn on all the components in the problem circuit to verify the customer complaint. Note the symptoms. Do not begin disassembly or testing until you have narrowed down the problem area.

2. Analyze The Schematic
   Look up the schematic for the problem circuit. Determine how the circuit is supposed to work by tracing the current paths from the power feed through the circuit components to ground. If several circuits fail at the same time, the fuse or ground is a likely cause.

   Based on the symptoms and your understanding of the circuit operation, identify one or more possible causes of the problem.

3. Isolate The Problem By Testing The Circuit
   Make circuit tests to check the diagnosis you made in step 2. Keep in mind that a logical, simple procedure is the key to efficient troubleshooting. Test for the most likely cause of failure first. Try to make tests at points that are easily accessible.

4. Fix The Problem
   Once the specific problem is identified, make the repair. Be sure to use proper tools and safe procedures.

5. Make Sure The Circuit Works
   Turn on all components in the repaired circuit in all modes to make sure you've fixed the entire problem. If the problem was a blown fuse, be sure to test all of the circuits on the fuse. Make sure no new problems turn up and the original problem does not recur.

How to Use This Section

Schematic Symbols

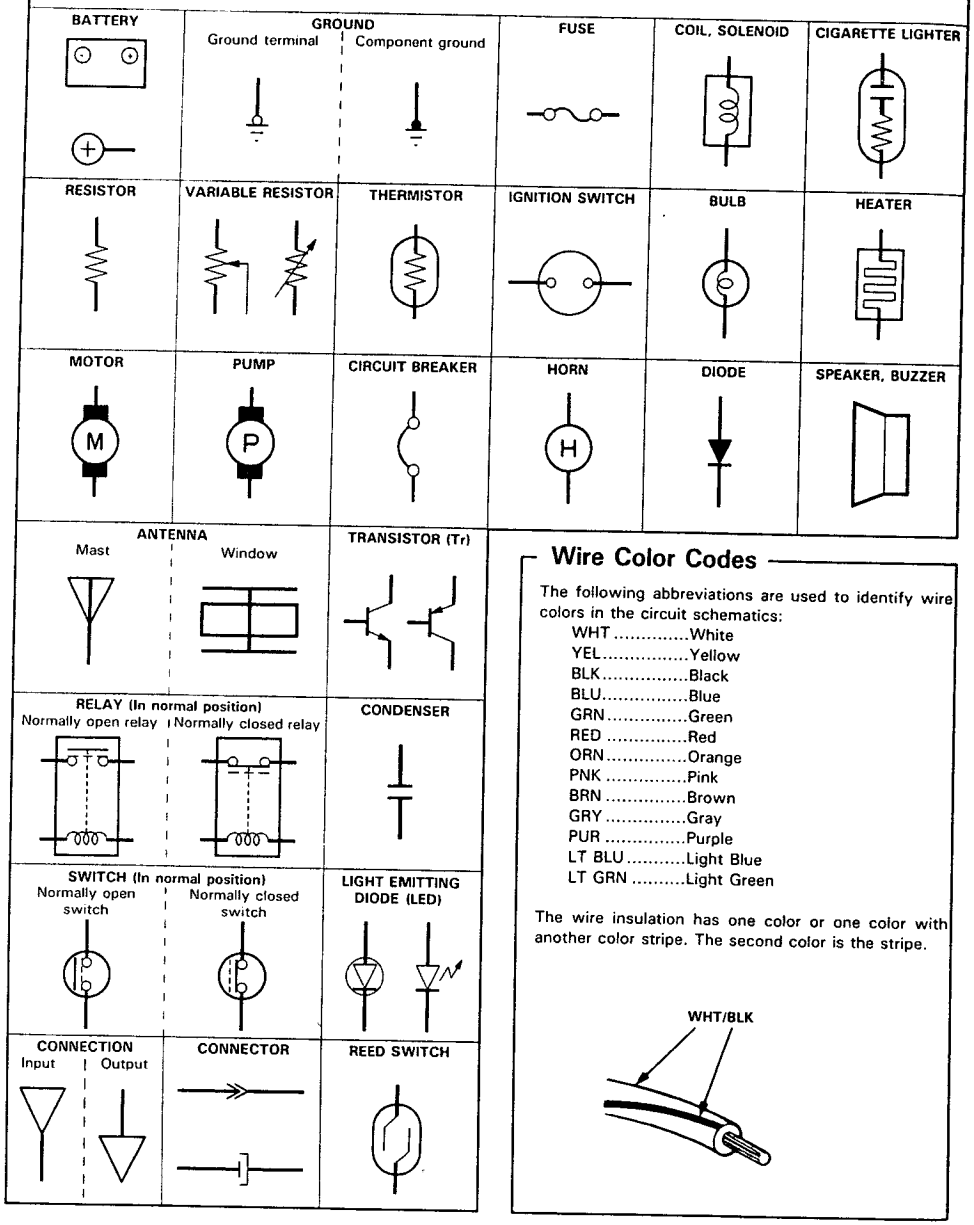

Wire Color Codes

The following abbreviations are used to identify wire colors in the circuit schematics:

WHT .....White
YEL.....Yellow
BLK.....Black
BLU.....Blue
GRN.....Green
RED .....Red
ORN.....Orange
PNK .....Pink
BRN .....Brown
GRY .....Gray
PUR .....Purple
LT BLU.....Light Blue
LT GRN .....Light Green

The wire insulation has one color or one color with another color stripe. The second color is the stripe.

Relay and Control Unit Locations

Engine Compartment

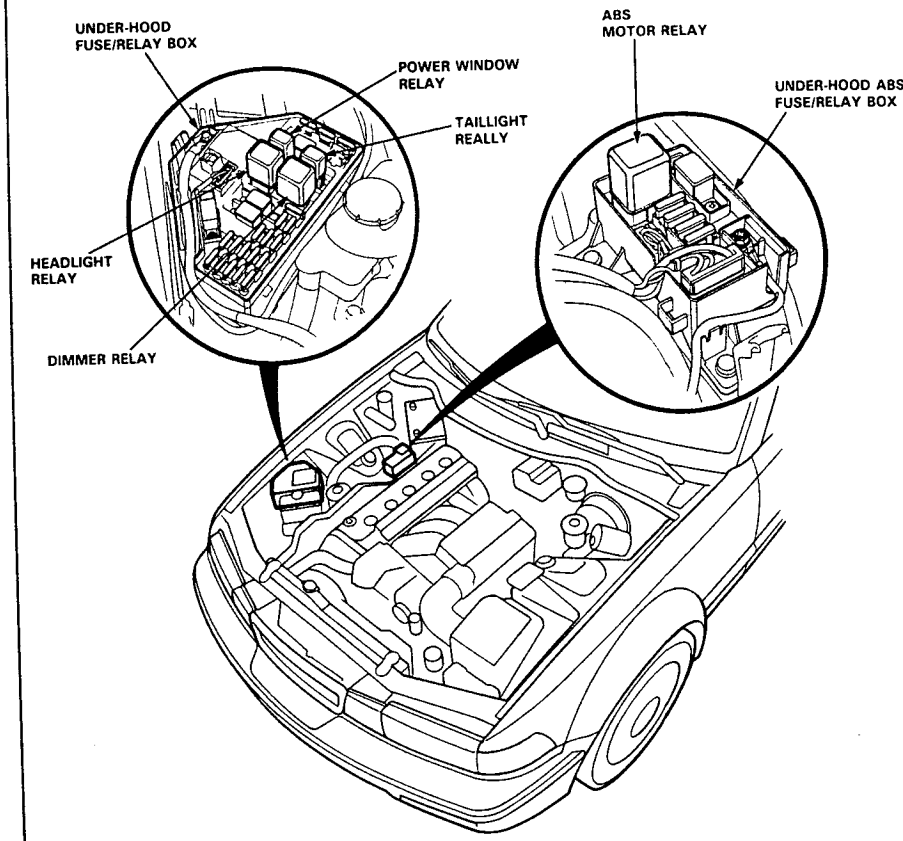

(co

Relay and Control Unit Locations

Engine Compartment (cont'd)

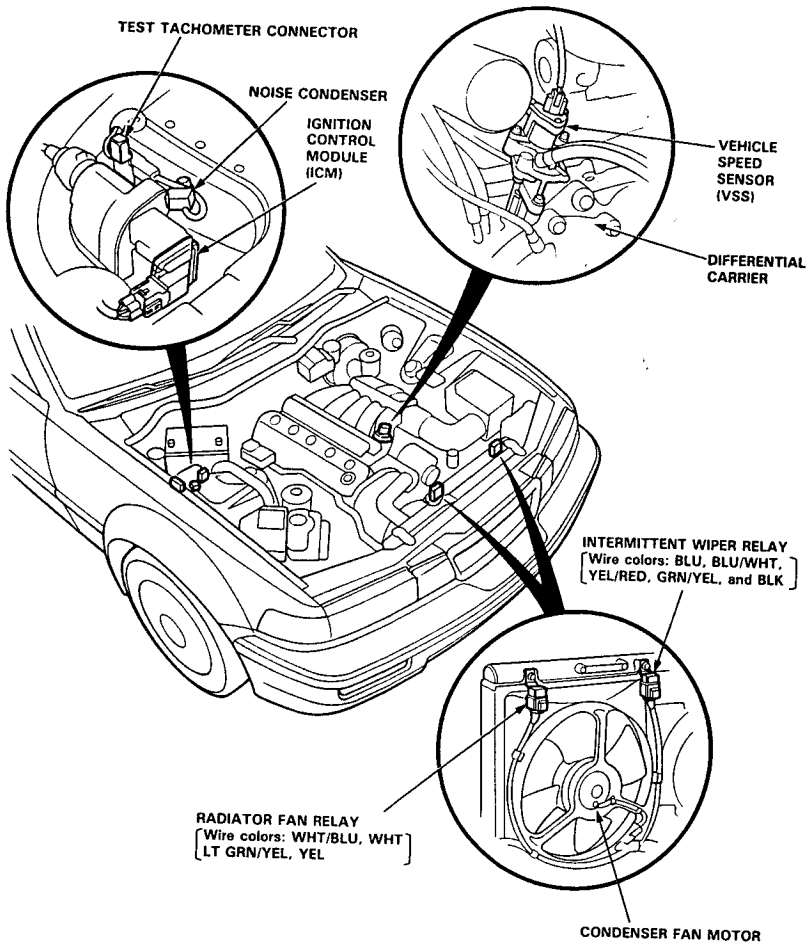

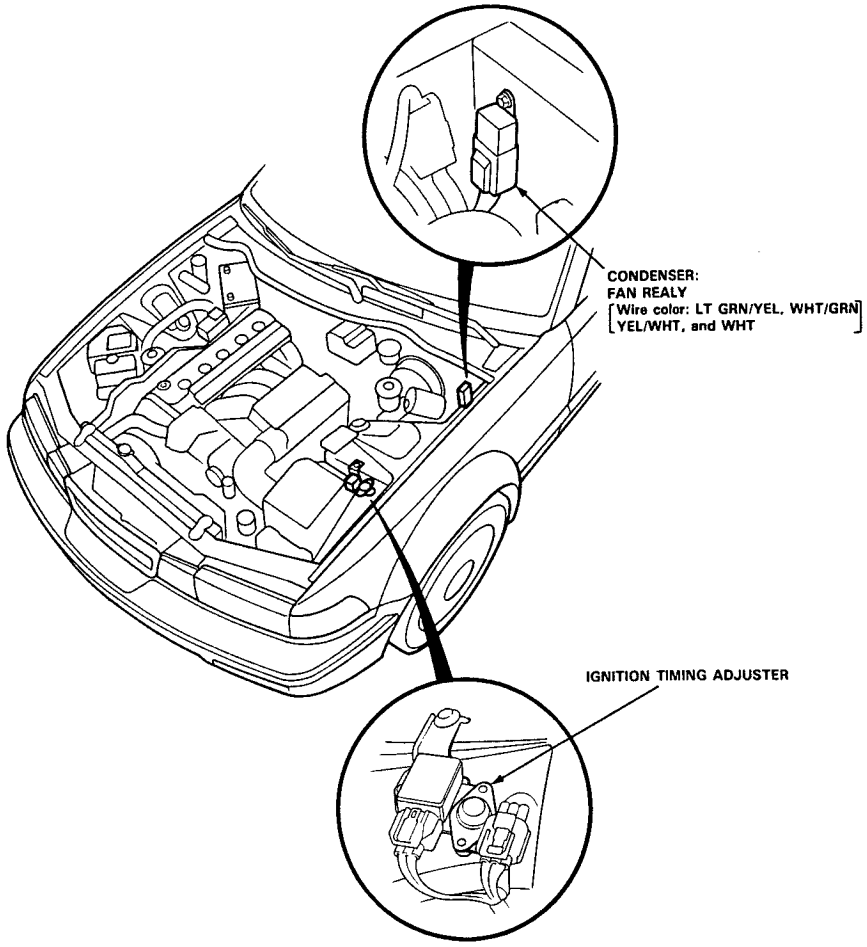

Relay and Control Unit Locations

Dashboard

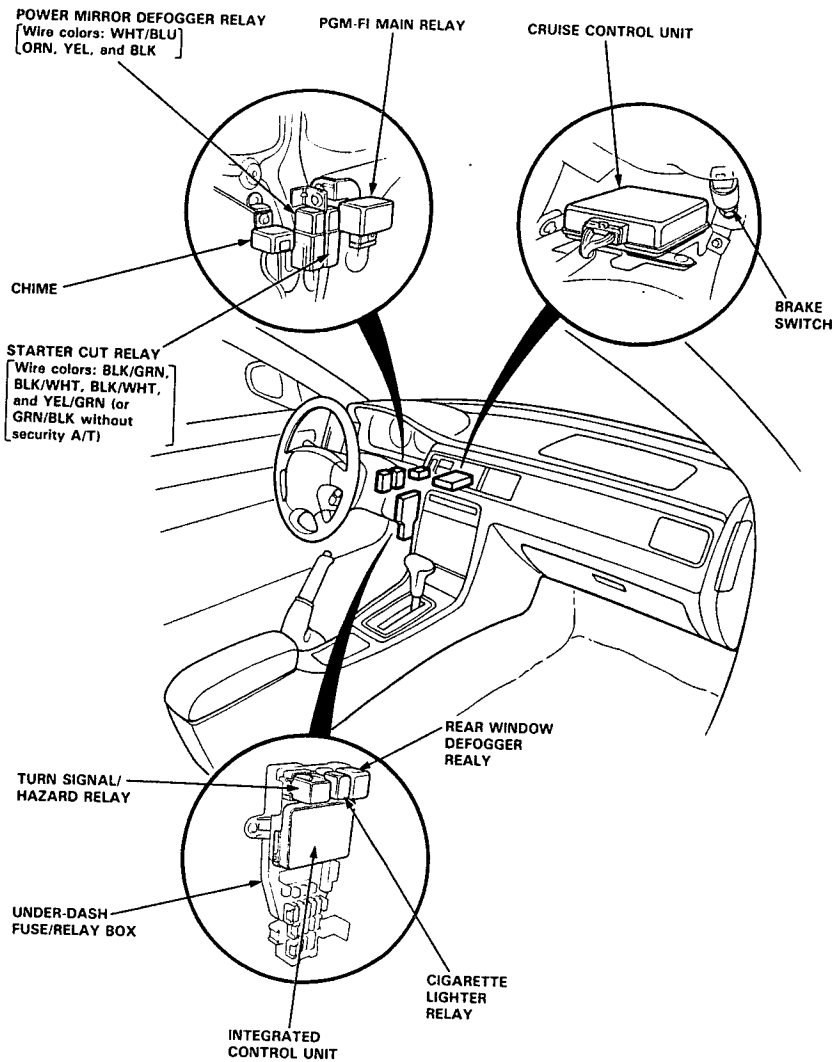

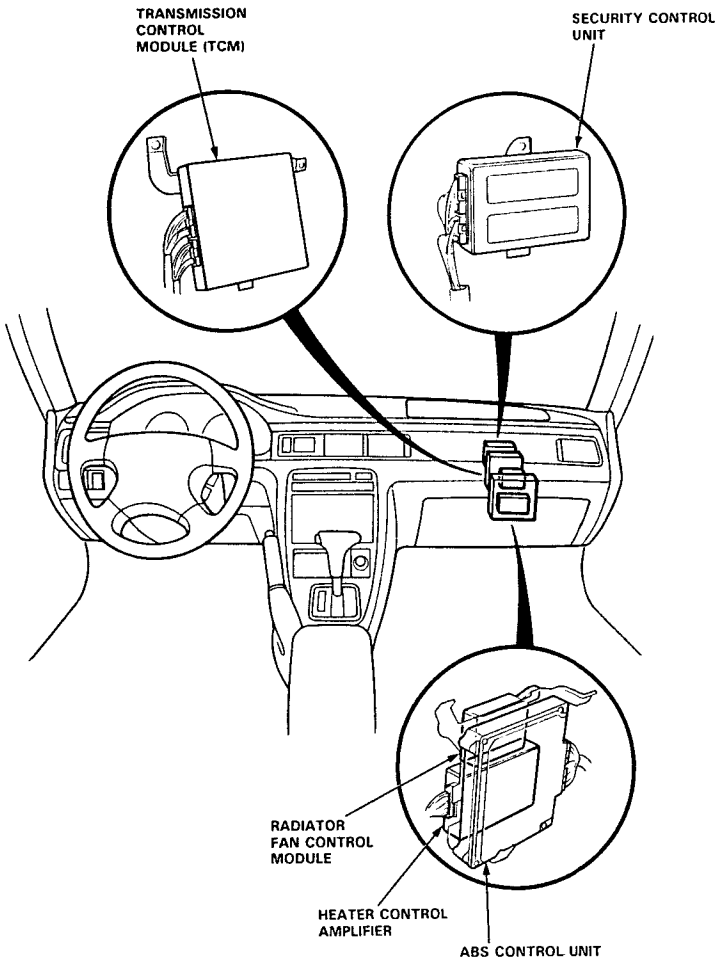

(cont'd)

Relay and Control Unit Locations

Dashboard (cont'd)

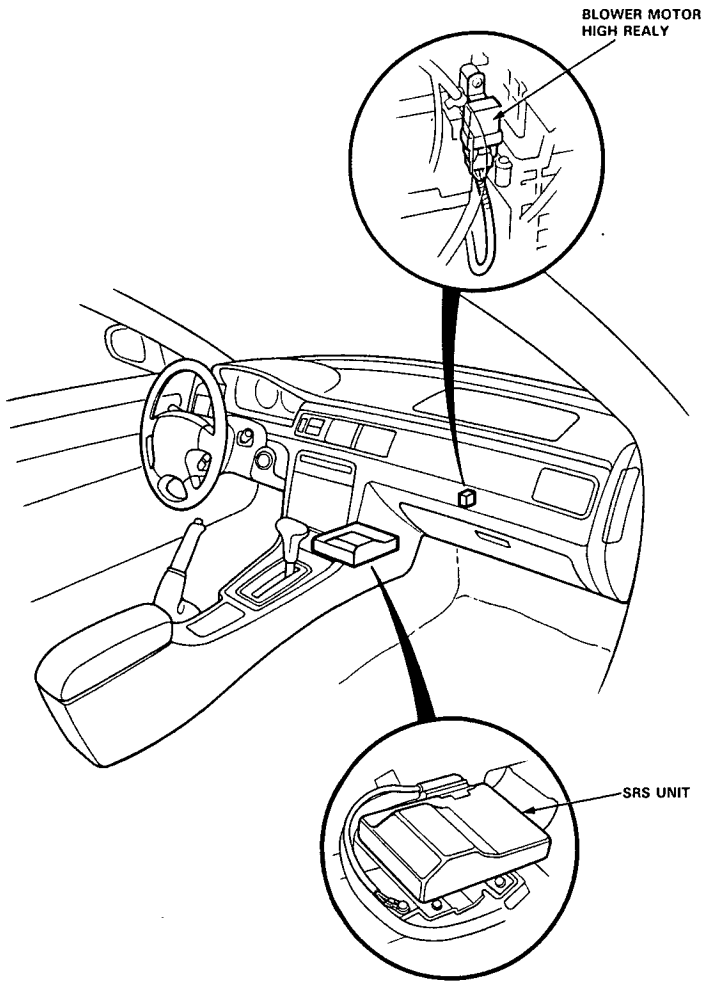

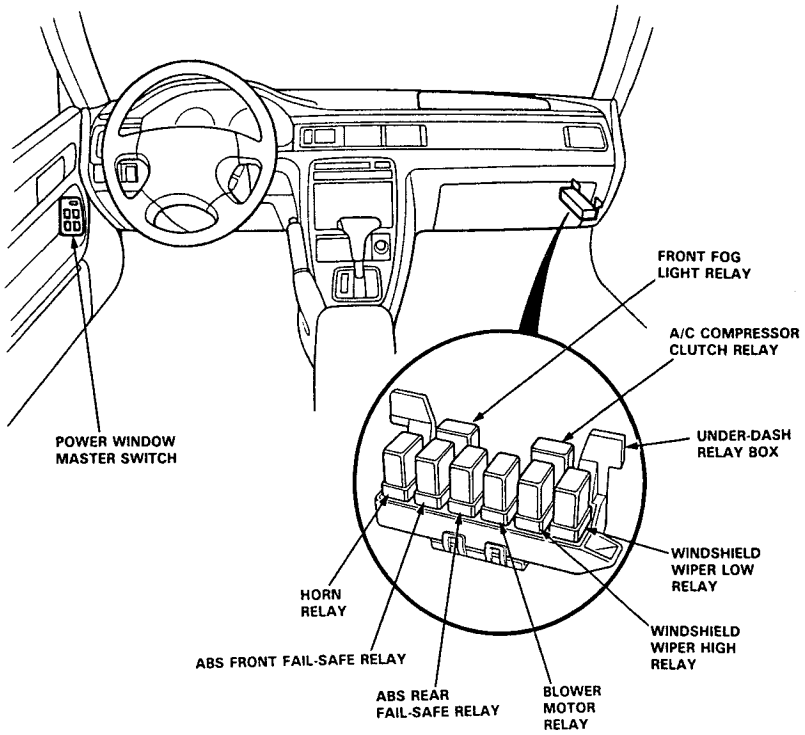

(cont'd)

Relay and Control Unit Locations

Dashboard (cont'd)

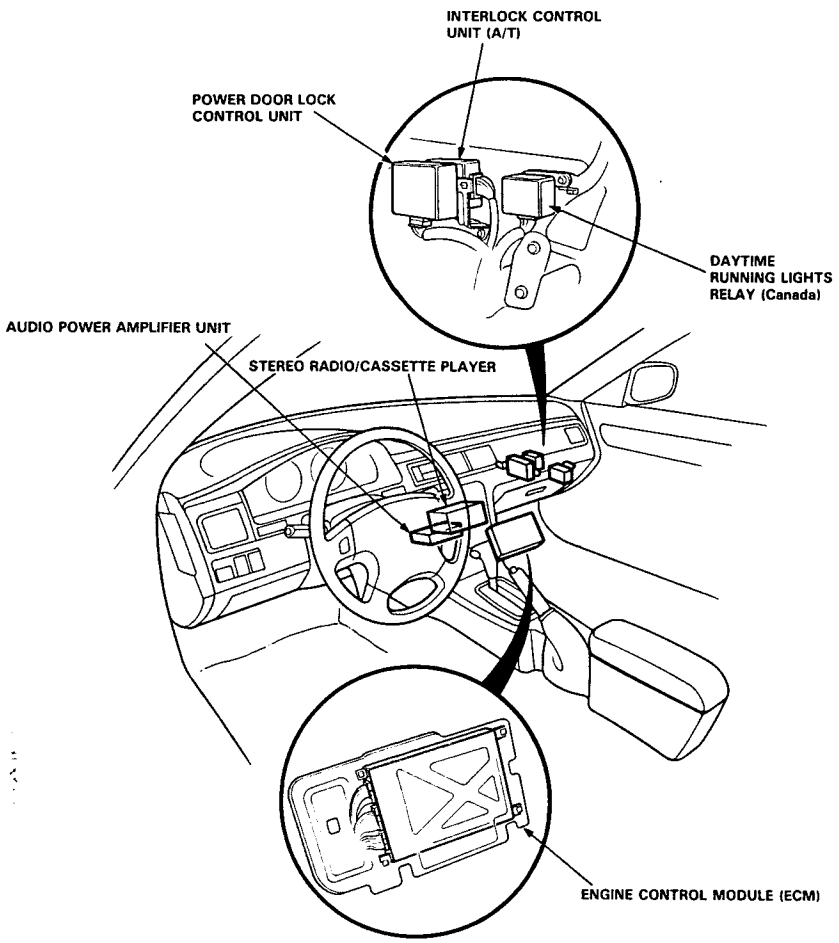

Seat

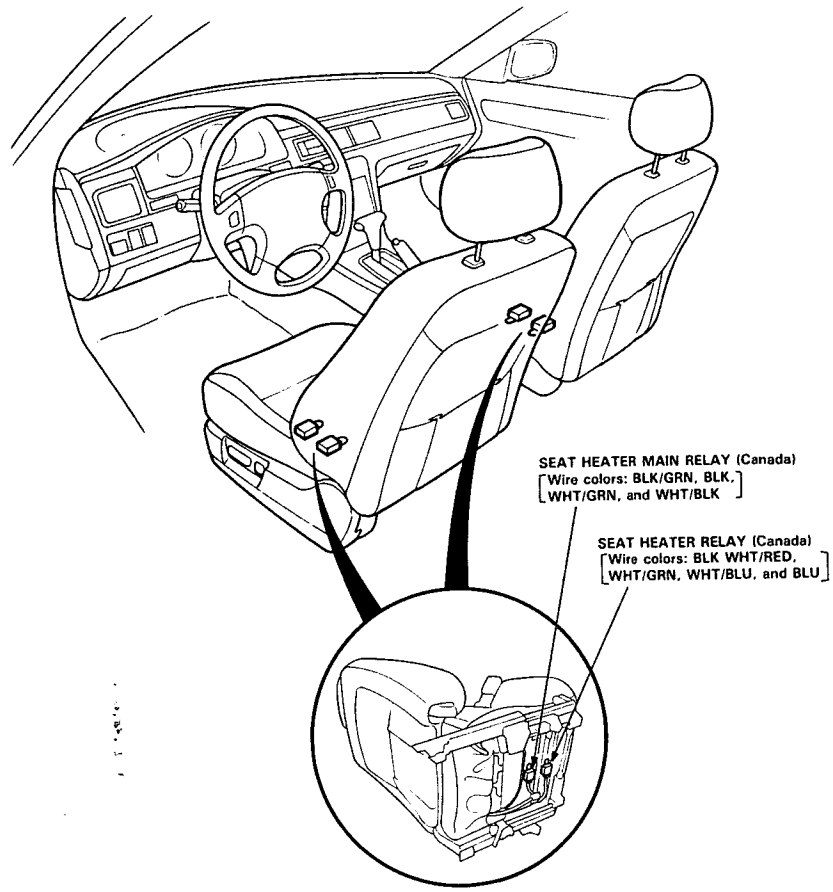

Relay and Control Unit Locations

Trunk

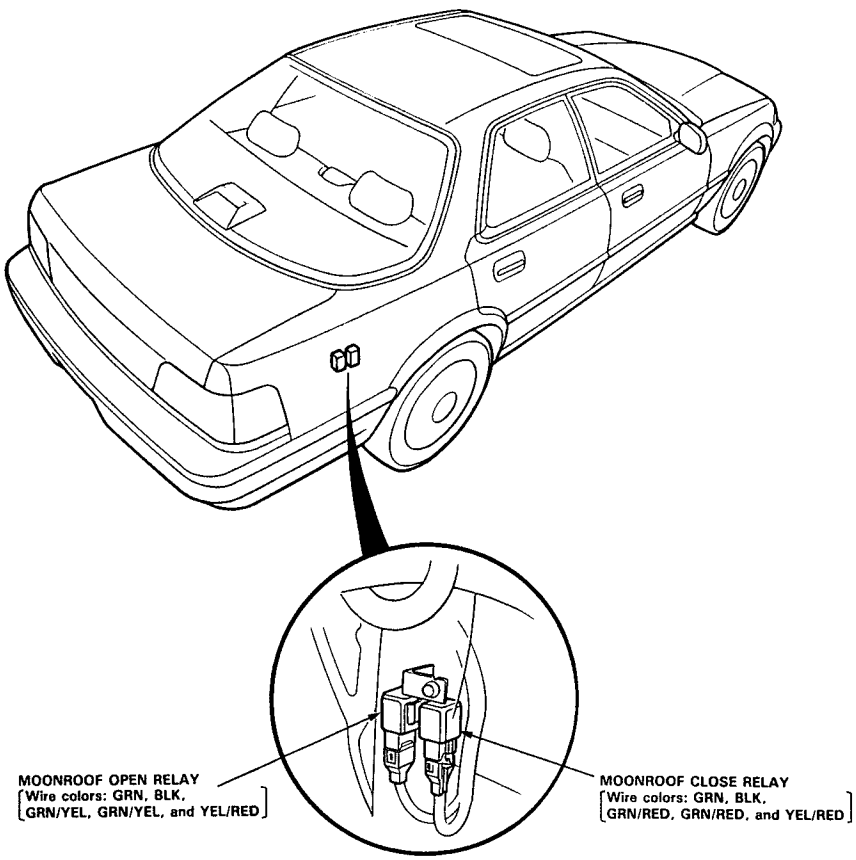

Connector Identification and Wire Harness Routing

How to Identify Connectors:
Identification numbers have been assigned to all connectors. The number is preceded by the letter "C" for connectors, "G" for ground terminals or "T" for non-ground terminals.

Harness \ Location	Engine compartment	Dashboard	Others (Floor, Door, Trunk, Roof)
Starter cables	T1, T2, T3, and ⊕		
Battery ground cables	T4 G1 and ⊖		
Engine ground wires	T5 and T6 G2, G3, and G4		
Engine wire harness	C101 through C129 T101 and T102 G101		
A/T sub-harness	C151 through C156		
A/T gear position switch sub-harness	C161 through C162		
Back-up light sub-harness (M/T)	C171 through C172		
Main wire harness	C201 through C226 C301 through C329 G201, G301, and G302	C401 through C466 G401 and G402	C414 through C417
Rear wire harness			C501 through C532 G501 and G502
Dashboard wire harness		C601 through C626 G601	
Heater sub-harness		C651 through C659	
Driver's door wire harness			C701 through C713
Front passenger's door wire harness			C721 through C731
Left rear door wire harness			C716 through C719
Right rear door wire harness			C736 through C739
Driver's power seat wire harness			C741 through C749
Roof wire harness			C751 through C760
Fuel unit sub-harness			C761 through C763
Rear window defogger ground wire			C771 G771
SRS main harness			C801 through C807 G801

Starter Cables

Connector or Terminal	Number of Cavities	Location	Connects to	Notes
T1 T2 T3		Right side of engine compartment Right side of engine compartment Left side of engine compartment	Under-hood fuse/relay box Under-hood ABS fuse/relay box Starter motor	
⊕		Battery	Battery positive terminal	

Battery Ground Cables

Connector or Terminal	Number of Cavities	Location	Connects to	Notes
T4		Clutch housing	Body ground, via battery ground cables	
G1		Right side of front bulkhead	Body ground, via battery ground cables	
⊖		Battery	Battery negative terminal	

Engine Ground Cables

Connector or Terminal	Number of Cavities	Location	Connects to	Notes
T5 T6		Right side of engine Right side of engine	Valve cover Valve cover	
G2 G3 G4		Right shock tower Right shock tower Right shook tower	Body ground, via engine ground cables Body ground, via engine ground cables Body ground, via engine ground cables	

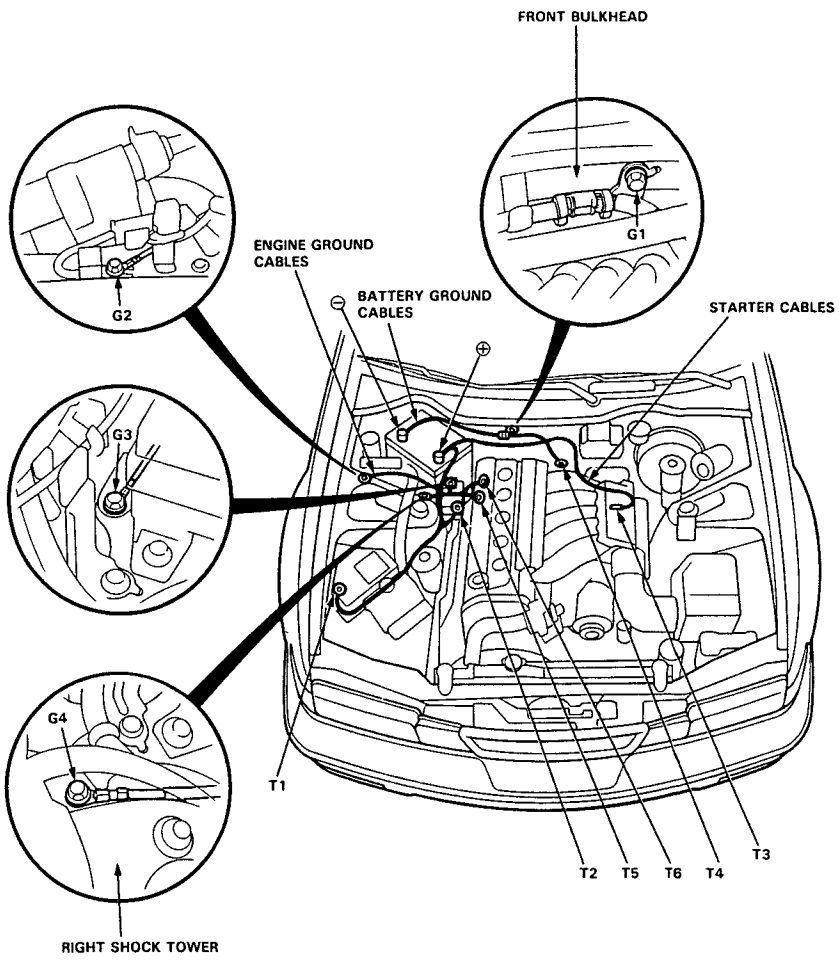

Engine Wire Harness

Connector or Terminal	Number of Cavities	Location	Connects to	Notes
C101	14	Left side of engine compartment	Main wire harness (C307)	
C102	14	Left side of engine compartment	Main wire harness (C306)	
C103	10	Left side of engine compartment	Main wire harness (C308)	A/T
C104	6	Left side of engine compartment	Fuel injector resistor	
C105	1	Left side of engine compartment	Main wire harness (C309)	
C106	2	Middle of engine	Intake air bypass (IAB) control solenoid valve	
C107	1	Left side of engine compartment	Starter solenoid	
C108	2	Engine compartment	Back-up light sub-harness (C171)	M/T
C109	14	Engine compartment	A/T sub-harness (C151)	A/T
C110	3	Middle of engine compartment	EGR valve lift sensor	
C111	2	Middle of engine	No. 5 fuel injector	
C112	2	Middle of engine	No. 4 fuel injector	
C113	2	Middle of engine	No. 3 fuel injector	
C114	2	Middle of engine	No. 2 fuel injector	
C115	2	Middle of engine	No. 1 fuel injector	
C116	2	Middle of engine	Engine coolant temperature (ECT) switch B	
C117	6	Middle of engine	TDC/CKP/CYP sensor	
C118	1	Left side of engine compartment	Engine oil pressure switch	
C119	2	Left side of engine	Rear knock sensor (KS)	
C120	3	Left side of engine	Vehicle speed sensor (VSS)	
C121	2	Left side of engine compartment	EVAP purge control solenoid valve	
C122	2	Left side of engine compartment	Idle air control (IAC) valve	
C123	2	Left side of engine	Front knock sensor (KS)	
C124	2	Middle of engine	Throttle position (TP) sensor	
C125	2	Middle of engine	Intake air temperature (IAT) sensor	
C126	4	Middle of engine compartment	Alternator	
C127	2	Middle of engine	Engine coolant temperature (ECT) sensor	
C128	1	Middle of engine	Engine coolant temperature (ECT) sending unit	
C129	14	Right side of engine compartment	Main wire harness (C219)	
T101		Right side of engine compartment	Under-hood fuse/relay box	
T102		Middle of engine compartment	Alternator	
G101		Left side of engine	Engine ground, via engine wire harness	

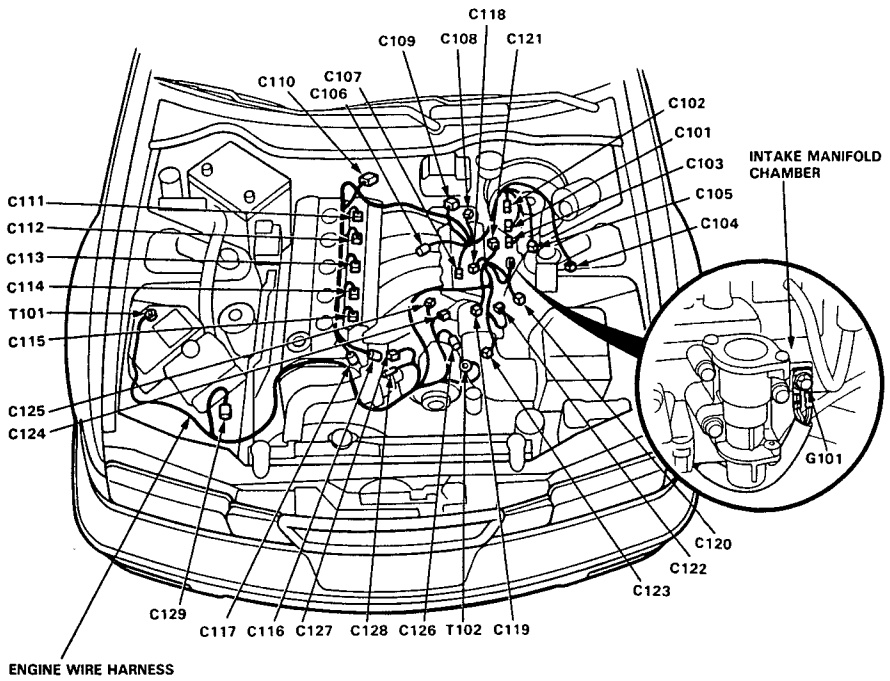

Connector Identification and Wire Harness Routing

A/T Sub-harness

Connector or Terminal	Number of Cavities	Location	Connects to	Notes
C151	14	Engine compartment	Engine wire harness (C109)	
C152	2	Automatic transmission	Lock-up control solenoid valve	
C153	2	Automatic transmission	Linear solenoid valve	
C154	2	Automatic transmission	Mainshaft speed sensor	
C155	2	Automatic transmission	Countershaft speed sensor	
C156	2	Automatic transmission	Shift control solenoid valve	

A/T Gear Position Switch Sub-harness

Connector or Terminal	Number of Cavities	Location	Connects to	Notes
C161	12	Middle floor	Main wire harness (C411)	
C162	14	Automatic transmission	A/T gear position switch	

Back-up Light Sub-harness (M/T)

Connector or Terminal	Number of Cavities	Location	Connects to	Notes
C171	2	Transmission housing	Engine wire harness (C108)	
C172	2	Transmission housing	Back-up light switch	

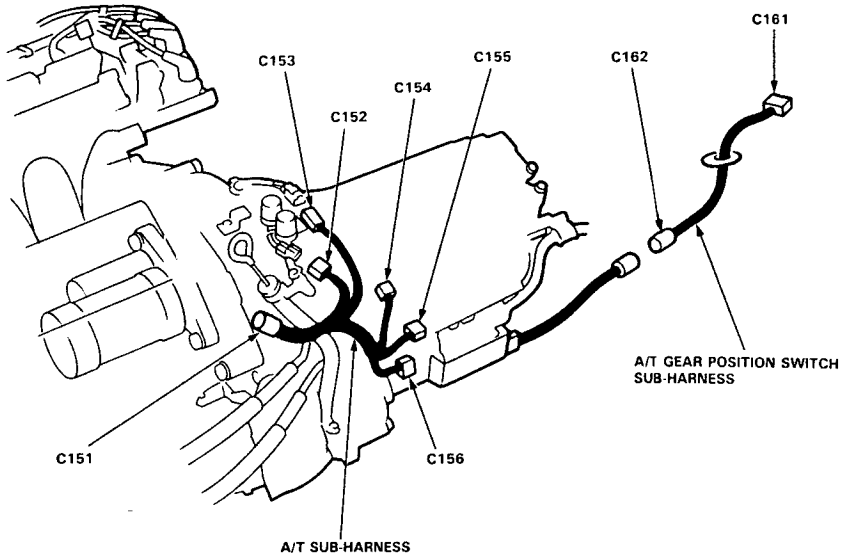

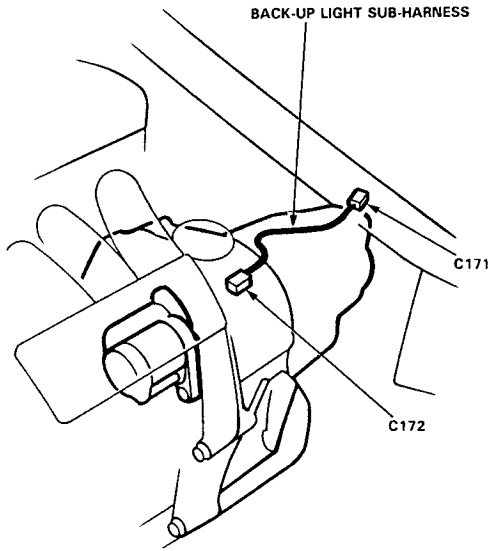

Main Wire Harness (Right side of engine compartment branch)

Connector or Terminal	Number of Cavities	Location	Connects to	Notes
C201	2	Behind right front wheelhouse	Windshield washer motor	
C202	4	Behind right front wheelhouse	Heated oxygen sensor (HO2S)	
C203	4	Right side of engine compartment	Ignition control module (ICM)	
C204	4	Right side of engine compartment	Ignition coil	
C205	2	Right side of engine compartment	Test tachometer connector	
C206	1	Right side of engine compartment	Noise condenser	
C207	4	Right side of engine compartment	Under-hood ABS fuse/relay box (C937)	
C208	3	Right side of engine compartment	Under-hood ABS fuse/relay box (C936)	
C209	2	Right side of engine compartment	Right front wheel speed sensor	ABS
C210	16	Right side of engine compartment	Under-hood fuse/relay box (C930)	
C211	10	Right side of engine compartment	Under-hood fuse/relay box (C928)	
C212	8	Right side of engine compartment	Under-hood fuse/relay box (C927)	
C213	7	Right side of engine compartment	Under-hood fuse/relay box (C929)	
C214	2	Right side of engine compartment	Under-hood fuse/relay box (C926)	
C215	10	Right side of engine compartment	ABS solenoids	
C216	2	Right side of engine compartment	ABS motor	
C217	2	Right side of engine compartment	ABS pressure switch	
C218	3	Right side of engine compartment	Under-hood fuse/relay box (C921)	
C219	14	Right side of engine compartment	Engine wire harness (C129)	
C220	4	Right side of engine compartment	Cruise control actuator	
C221	2	Behind right headlight	Right headlight (Low beam)	
C222	2	Behind right fog light	Right front fog light	
C223	2	Behind right headlight	Right headlight (High beam)	
C224	2	Behind right front side marker/ parking light	Right front side marker light	
C225	2	Behind right front side marker/ parking light	Right front parking light	
C226	2	Behind front bumper	Right front turn signal light	
C319	2	Middle of engine compartment	Low horn	
C320	2	Middle of engine compartment	Security hood switch	
C321	2	Behind front bumper	Left front turn signal light	
C322	2	Behind left fog light	Left front fog light	
C323	2	Behind left head light	Left headlight (High beam)	
C324	2	Left front corner of engine compartment	Left front side marker light	
C325	2	Left front corner of engine compartment	Left front parking light	
C326	2	Behind left headlight	Left headlight (Low beam)	
C327	2	Left side of engine compartment	High horn	
C328	3	Left side of engine compartment	Ignition timing adjuster	
C329	3	Left side of engine compartment	Manifold absolute pressure (MAP) sensor	
G201		Right side of engine compartment	Body ground, via main wire harness	
G301		Left side of engine compartment	Body ground, via main wire harness	

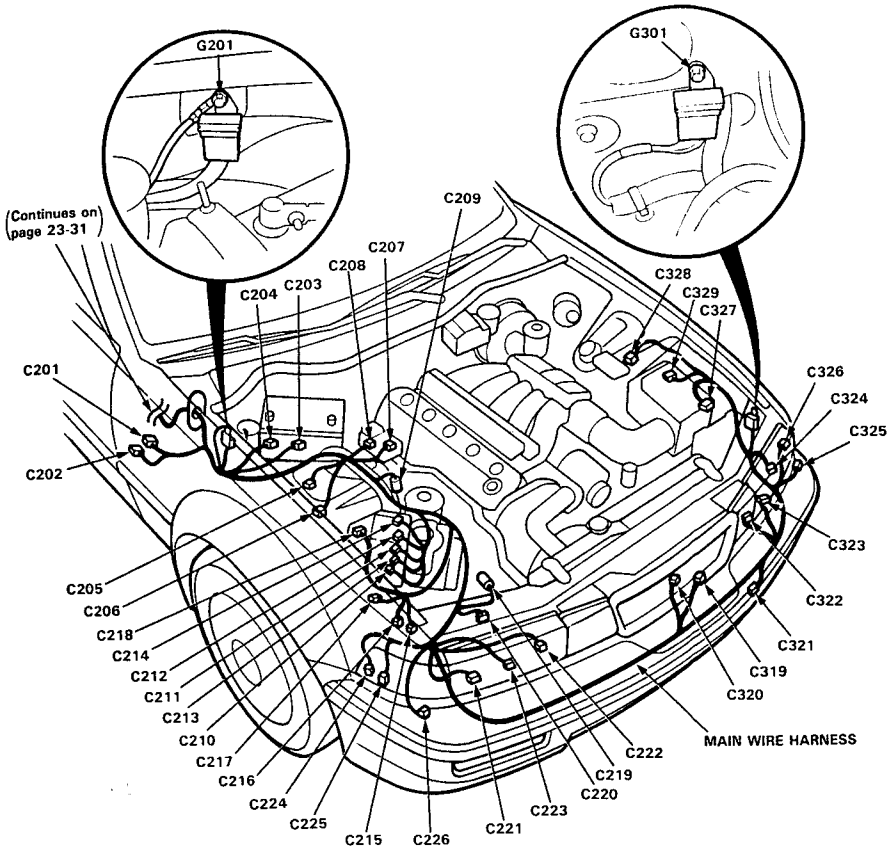

Main Wire Harness (cont'd) (Left side of engine compartment branch)
NOTE: See page 23-24 for connectors C319 through C329 and G301.

Connector or Terminal	Number of Cavities	Location	Connects to	Notes
C301	4	Left side of engine compartment	Condenser fan relay	
C302	5	Left side of engine compartment	Windshield wiper motor	
C303	1	Left side of engine compartment	Brake fluid level switch (+)	
C304	1	Left side of engine compartment	Brake fluid level switch (−)	
C305	4	Middle of engine compartment	EGR control solenoid valve and water valve solenoid	
C306	14	Left side of engine compartment	Engine wire harness (C102)	
C307	14	Left side of engine compartment	Engine wire harness (C101)	
C308	10	Left side of engine compartment	Engine wire harness (C103)	A/T
C309	1	Left side of engine compartment	Engine wire harness (C105)	
C310	2	Left side of engine compartment	A/C pressure switch	
C311	2	Left side of engine compartment	Left front wheel sensor	ABS
C312	2	Left side of engine compartment	A/C compressor clutch	
C313	4	Middle of engine compartment	Radiator fan motor	
C314	2	Middle of engine compartment	Engine coolant temperature (ECT) switch A	
C315	2	Middle of engine compartment	Condenser fan motor	
C316	2	Middle of engine compartment	Power steering pressure (PSP) switch	
C317	2	Middle of engine compartment	Radiator fan motor	
C318	6	Middle of engine compartment	Intermittent wiper relay	
C319	2	Middle of engine compartment	Low horn	
C320	2	Middle of engine compartment	Security hood switch	
C321	2	Behind front bumper	Left front turn signal light	
C322	2	Behind left fog light	Left front fog light	
C323	2	Behind left headlight	Left headlight (High beam)	
C324	2	Left front corner of engine compartment	Left front side marker light	
C325	2	Left front corner of engine compartment	Left front parking light	
C326	2	Behind left headlight	Left headlight (Low beam)	
C327	2	Left side of engine compartment	High horn	
C328	3	Left side of engine compartment	Ignition timing adjuster	
C329	3	Left side of engine compartment	Manifold absolute pressure (MAP) sensor	
G301		Left side of engine compartment	Body ground, via main wire harness	
G302		Left side of engine compartment	Body ground, via main wire harness	

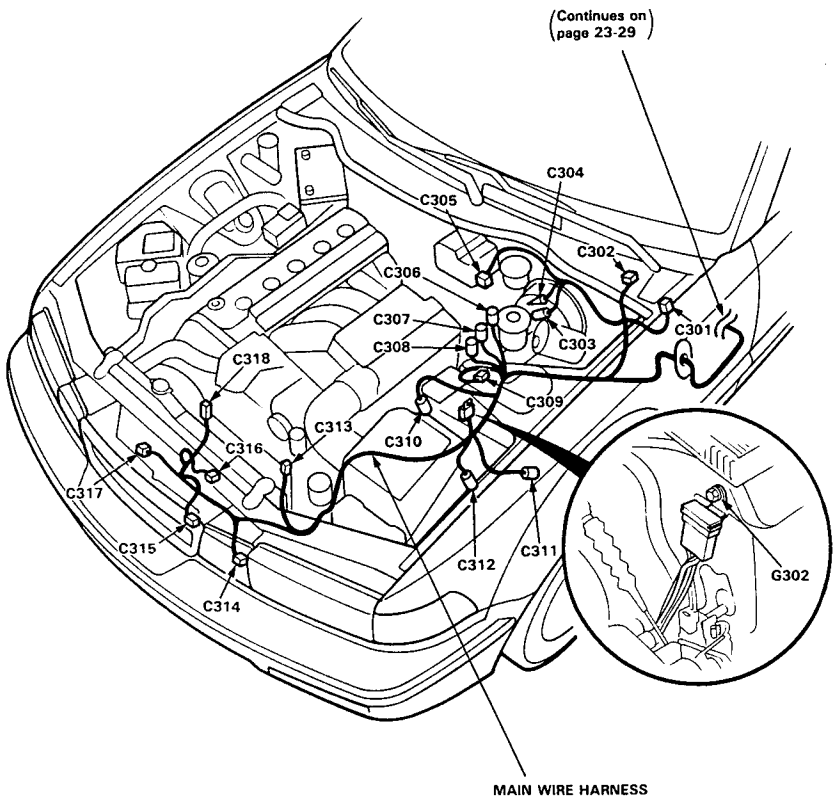

(cont'd)

Main Wire Harness (cont'd) (Left side of dash and floor branch)

Connector or Terminal	Number of Cavities	Location	Connects to	Notes
C401	16	Behind left kick panel	Integrated control unit	
C402		Behind left kick panel	No. 12 (7.5 A) auxiliary fuse holder	
C403	18	Behind left kick panel	Under-dash fuse/relay box (C914)	
C404	16	Behind left kick panel	Under-dash fuse/relay box (C913)	
C405	10	Behind left kick panel	Under-dash fuse/relay box (C910)	
C406	5	Behind left kick panel	Under-dash fuse/relay box (C912)	
C407	3	Behind left kick panel	Under-dash fuse/relay box (C911)	
C408		Under middle of dash	Junction connector	
C409	2	Under middle of dash	Service check connector	
C410	2	Under middle of dash	Dashboard wire harness (C619)	
C411	12	Under middle of dash	A/T gear position switch sub-harness (C161)	A/T
C412	2	Under middle of dash	Shift lock solenoid	A/T
C413	3	Under middle of dash	A/T gear position console light	A/T
C414	1	Middle floor	Parking brake switch	
C415	4	Left side of floor	Driver's power seat wire harness (C741)	USA
C415	8	Left side of floor	Driver's power seat wire harness (C741)	Canada
C417	2	Left side of floor	Driver's seat belt switch	
C418	18	Behind left kick panel	Rear wire harness (C504)	
C419	2	Behind left kick panel	Rear wire harness (C505)	
C420	7	Under left side of dash	PGM-FI main relay	
C421	4	Under left side of dash	Starter cut relay	
C422	2	Under left side of dash	Chime	
C423	4	Under left side of dash	Power mirror defogger relay	Canada
C424	4	Under left side of dash	SRS main harness (C802)	
C425		Under left side of dash	Junction connector	
C426	17	Driver's door area	Driver's door wire harness (C702)	
C427	15	Driver's door area	Driver's door wire harness (C701)	
C428	14	Under left side of dash	Cruise control unit	
C429	2	Under left side of dash	Clutch switch (Cruise control)	M/T
C430	4	Under left side of dash	Brake switch	
C431	2	Under left side of dash	Clutch interlock switch	M/T
C432	16	Under left side of dash	Dashboard wire harness (C603)	
C433	12	Under left side of dash	Combination light/turn signal switch	
C434	10	Under left side of dash	Windshield wiper/washer switch	
C435	8	Under left side of dash	Ignition switch	
G401		Behind left kick panel	Body ground, via main wire harness	

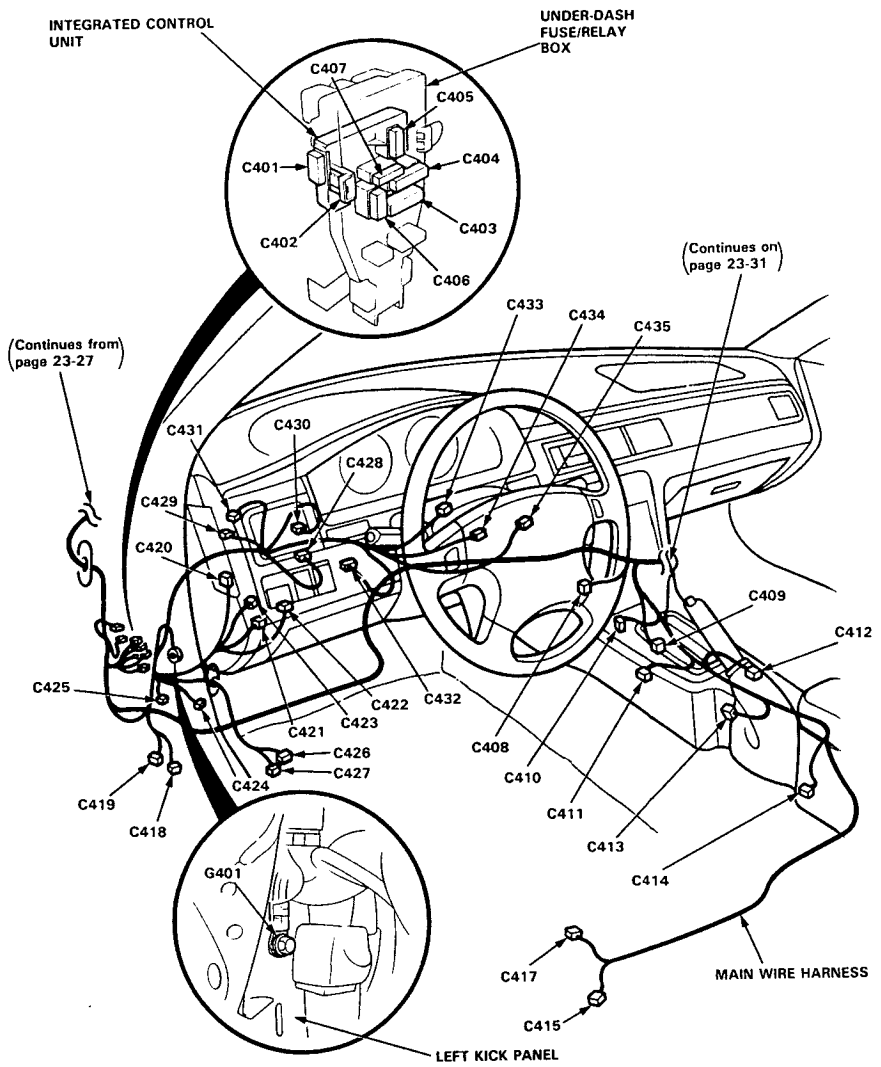

(cont

Main Wire Harness (cont'd) (Right side of dash and floor branch)

Connector or Terminal	Number of Cavities	Location	Connects to	Notes
C436	26	Under right side of dash	Engine control module (ECM)	
C437	22	Under right side of dash	Engine control module (ECM)	
C438	16	Under right side of dash	Engine control module (ECM)	
C439	12	Under right side of dash	Engine control module (ECM)	
C440	26	Under right side of dash	Transmission control module (TCM)	
C441	22	Under right side of dash	Transmission control module (TCM)	
C442	18	Under right side of dash	Security control unit	
C443	12	Under right side of dash	Security control unit	
C444	3	Under right side of dash	Heater sub-harness (C654)	
C445		Under right side of dash	Junction connector	
C446		Under right side of dash	Junction connector	
C447	18	Under right side of dash	ABS control unit	
C448	12	Under right side of dash	ABS control unit	
C449	14	Under right side of dash	Heater control amplifier	
C450	8	Under right side of dash	Radiator fan control module	
C451	16	Under right side of dash	C452 connector	
C452	16	Under right side of dash	C451 connector	
C453	4	Under-dash relay box	Front fog light relay	
C454	4	Under-dash relay box	A/C compressor clutch relay	
C455	4	Under-dash relay box	Horn relay	
C456	4	Under-dash relay box	ABS front fail-safe relay	
C457	4	Under-dash relay box	ABS rear fail-safe relay	
C458	4	Under-dash relay box	Blower motor relay	
C459	4	Under-dash relay box	Windshield wiper high relay	
C460	4	Under-dash relay box	Windshield wiper low relay	
C461		Under right side of dash	Junction connector	
C462	14	Under right side of dash	Daytime running lights control unit	Canada
C463	12	Under right side of dash	Power door lock control unit	
C464	8	Under right side of dash	Interlock control unit	A/T
C465	3	Under right side of dash	Keyless power door lock system	Optional
C466	17	Front passenger's door area	Front passenger's door wire harness (C722)	
C467	15	Front passenger's door area	Front passenger's door wire harness (C721)	
C468	20	Under right side of dash	Dashboard wire harness (C625)	
C469	18	Under right side of dash	Dashboard wire harness (C626)	A/T
C469	10	Under right side of dash	Dashboard wire harness (C626)	M/T
C470	6	Right side of floor	ABS inspection connector	
C471	3	Right side of floor	Front passenger's seat heater	Canada
C472	1	Right B-pillar area	Front passenger's door switch	
C473	8	Right rear door area	Right rear door wire harness (C736)	
G402		Behind right kick panel	Body ground, via main wire harness	

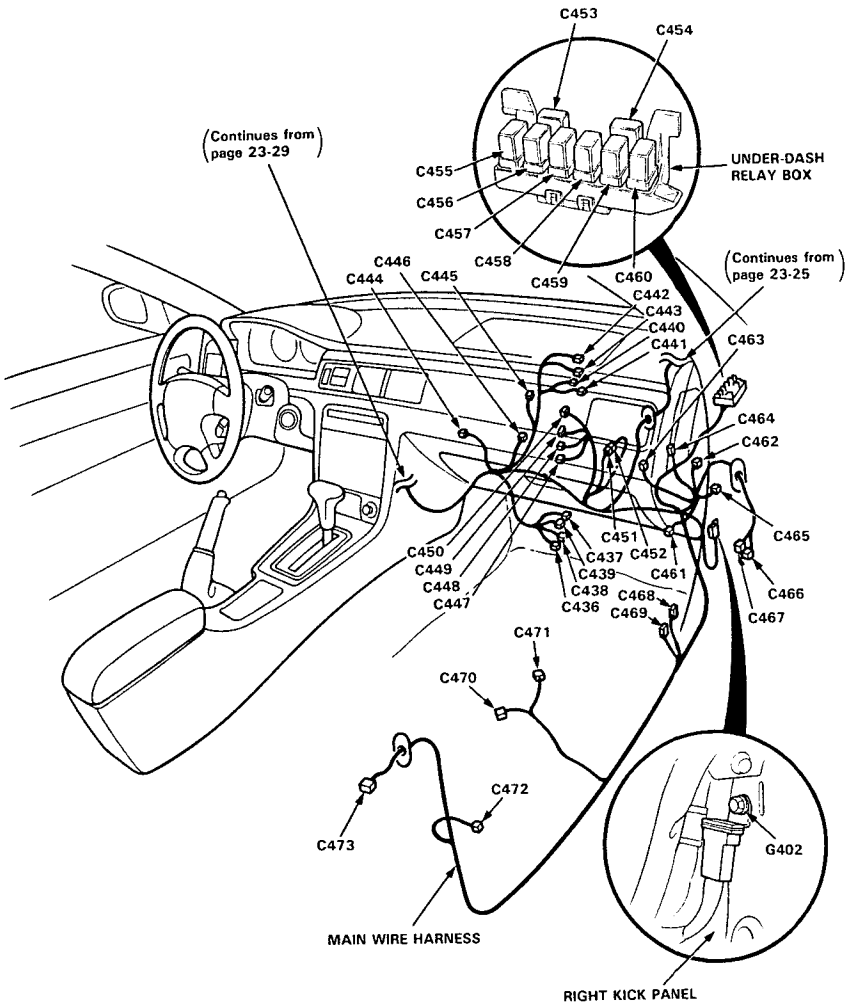

(cont'd)

Rear Wire Harness

Connector or Terminal	Number of Cavities	Location	Connects to	Notes
C501	20	Behind left kick panel	Dashboard wire harness (C601)	
C502	12	Behind left kick panel	Under-dash fuse/relay box (C916)	
C503	2	Behind left kick panel	Under-dash fuse/relay box (C915)	
C504	18	Behind left kick panel	Main wire harness (C418)	
C505	2	Behind left kick panel	Main wire harness (C419)	
C506	8	Left rear door area	Left rear door wire harness (C716)	
C507	1	Left B-pillar area	Driver's door switch	
C508	8	Left C-pillar area	Roof wire harness (C756)	
C509	1	Left quarter panel area	Left rear door switch	
C510		Left front trunk area	Junction connector	
C511	4	Left front trunk area	Cellular phone system	Optional
C512	2	Left side of rear shelf panel	Left rear speaker	
C513	2	Middle of rear shelf	Trunk light	
C514	2	Middle of rear shelf	High mount brake light	
C515	4	Middle of tank area	Fuel unit sub-harness (C761)	
C516	1	Right quarter panel area	Right rear door switch	
C517	2	Right C-pillar area	Roof wire harness (C758)	
C518	2	Right side of rear shelf	Right rear speaker	
C519	1	Right side of rear shelf	Noise condenser	
C520	1	Right C-pillar area	Rear window defogger	
C521	2	Right side of trunk area	Right rear wheel speed sensor	ABS
C522	6	Right side of trunk area	Moonroof open relay	
C523	6	Right side of trunk area	Moonroof close relay	
C524	8	Right side of trunk area	Right taillight	
C525	2	Middle of trunk area	Security trunk key cylinder switch	
C526	2	Middle of trunk area	Trunk latch switch	
C527	2	Middle of trunk area	Security trunk latch switch	
C528	8	Left side of trunk area	Trailer lighting connector	
C529	3	Left side of trunk area	Power antenna motor	
C530	2	Left side of trunk area	Left rear wheel sensor	ABS
C531	8	Left side of trunk area	Left taillight	
C532	4	Behind rear bumper	License light	
G501		Left side of rear floor	Body ground, via rear wire harness	
G502		Left side of rear floor	Body ground, via rear wire harness	

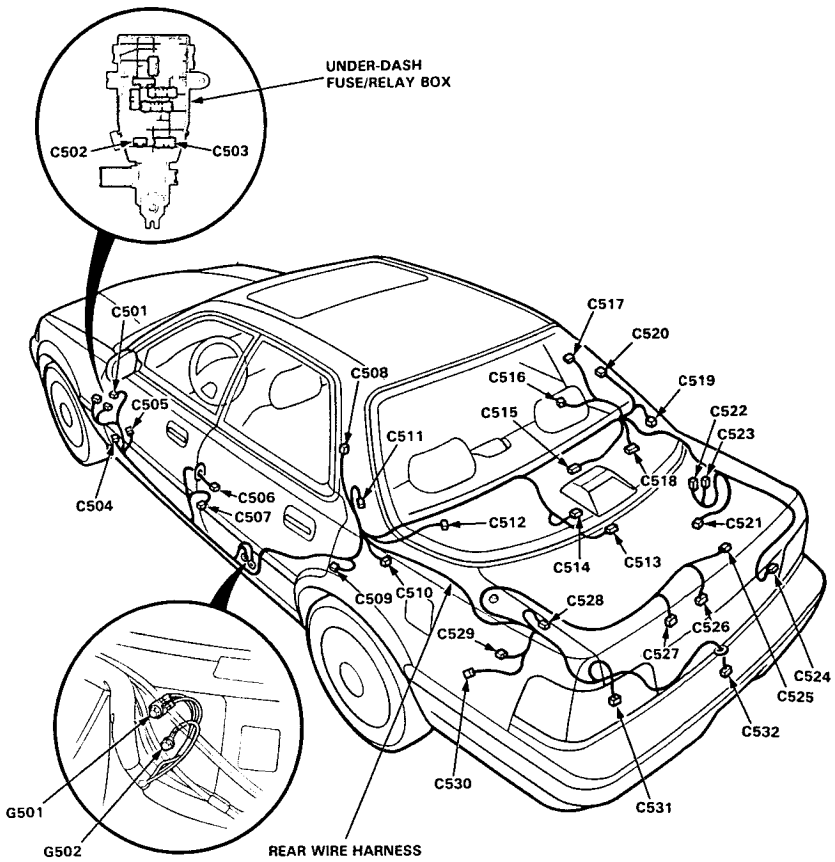

Dashboard Wire Harness

Connector or Terminal	Number of Cavities	Location	Connects to	Notes
C601	20	Under left side of dash	Rear wire harness (C501)	
C602	18	Behind left kick panel	Under-dash fuse/relay box (C905)	
C603	16	Under left side of dash	Main wire harness (C432)	
C604	10	Behind instrument panel	Power mirror switch	
C605	3	Behind instrument panel	Dash lights brightness controller	
C606	5	Behind instrument panel	Moonroof switch	
C607	10	Behind instrument panel	Front fog light and cruise control main switches	
C608	10	Behind gauges	Gauge assembly	
C609	14	Behind gauges	Gauge assembly	A/T
C610	2	Behind instrument panel	Left front tweeter	
C611	16	Behind gauges	Gauge assembly	
C612	10	Behind gauges	Gauge assembly	
C613		Behind instrument panel	Junction connector	
C614	10	Behind middle of dash	Hazard warning switch	
C615	4	Behind middle of dash	Clock	
C616	6	Behind instrument panel	Rear window defogger switch	
C617	14	Under middle of dash	Heater control panel	
C618	4	Under middle of dash	Cigarette lighter	
C619	2	Under middle of dash	Main wire harness (C410)	
C620	16	Under middle of dash	Stereo radio/cassette player	
C621	8	Under middle of dash	Audio power amplifier unit	(LS)
C622	5	Under middle of dash	Stereo radio/cassette player	(GS)
C622	2	Under middle of dash	Stereo radio/cassette player	(LS)
C623	2	Behind instrument panel	Right front tweeter	
C624	2	Behind glove box	Glove box light	
C625	20	Under right side of dash	Main wire harness (C468)	
C626	18	Under right side of dash	Main wire harness (C469)	A/T
C626	10	Under right side of dash	Main wire harness (C469)	M/T
G601		Under middle of dash	Body ground, via dashboard wire harness	

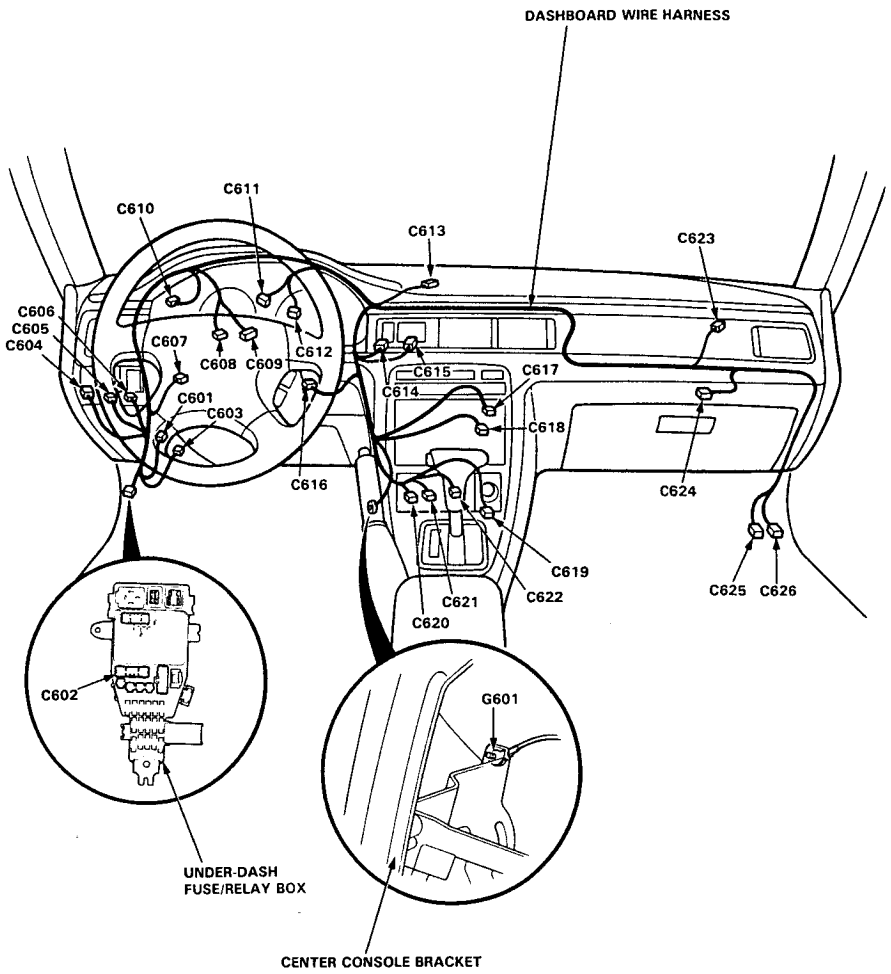

Connector Identification and Wire Harness Routing

Driver's Door Wire Harness

Connector or Terminal	Number of Cavities	Location	Connects to	Notes
C701	15	Driver's door	Main wire harness (C427)	
C702	17	Driver's door	Main wire harness (C426)	
C703	2	Driver's door	Left front door speaker	
C704	2	Driver's door	Driver's door courtesy light	
C705	2	Driver's door	Power window master switch	
C706	16	Driver's door	Power window master switch	
C707	5	Driver's door	Driver's seat heater switch	Canada
C708	3	Driver's door	Left power mirror	
C709	2	Driver's door	Left power mirror defogger	Canada
C710	3	Driver's door	Driver's door lock switch	
C711	4	Driver's door	Driver's power window motor	
C712	2	Driver's door	Security indicator	
C713	8	Driver's door	Driver's door lock actuator (LS)	Canada
C713	4	Driver's door	Driver's door lock actuator (LS)	Canada

Left Rear Door Wire Harness

Connector or Terminal	Number of Cavities	Location	Connects to	Notes
C716	8	Left rear door	Rear wire harness (C506)	
C717	2	Left rear door	Left rear power window motor	
C718	5	Left rear door	Left rear power window switch	
C719	4	Left rear door	Left rear door lock actuator	

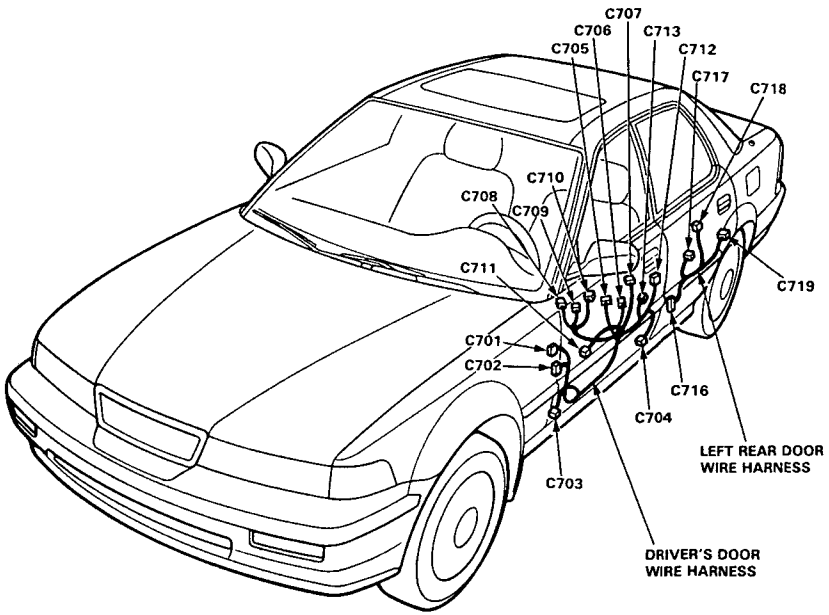

Connector Identification and Wire Harness Routing

Front Passenger's Door Wire Harness

Connector or Terminal	Number of Cavities	Location	Connects to	Notes
C721	15	Front passenger's door	Main wire harness (C467)	
C722	17	Front passenger's door	Main wire harness (C466)	
C723	2	Front passenger's door	Right front door speaker	
C724	2	Front passenger's door	Front passenger's door courtesy light	
C725	5	Front passenger's door	Front passenger's seat heater switch	Canada
C726	2	Front passenger's door	Right power mirror defogger	Canada
C727	3	Front passenger's door	Right power mirror	
C728	5	Front passenger's door	Front passenger's power window switch	
C729	3	Front passenger's door	Front passenger's door lock switch	
C730	2	Front passenger's door	Front passenger's power window motor	
C731	8	Front passenger's door	Front passenger's door lock actuator	
C731	2	Front passenger's door	Front passenger's door lock actuator (LS)	Canada

Right Rear Door Wire Harness

Connector or Terminal	Number of Cavities	Location	Connects to	Notes
C736	8	Right rear door	Main wire harness (C473)	
C737	2	Right rear door	Right rear power window motor	
C738	5	Right rear door	Right rear power window switch	
C739	4	Right rear door	Right rear door lock actuator	

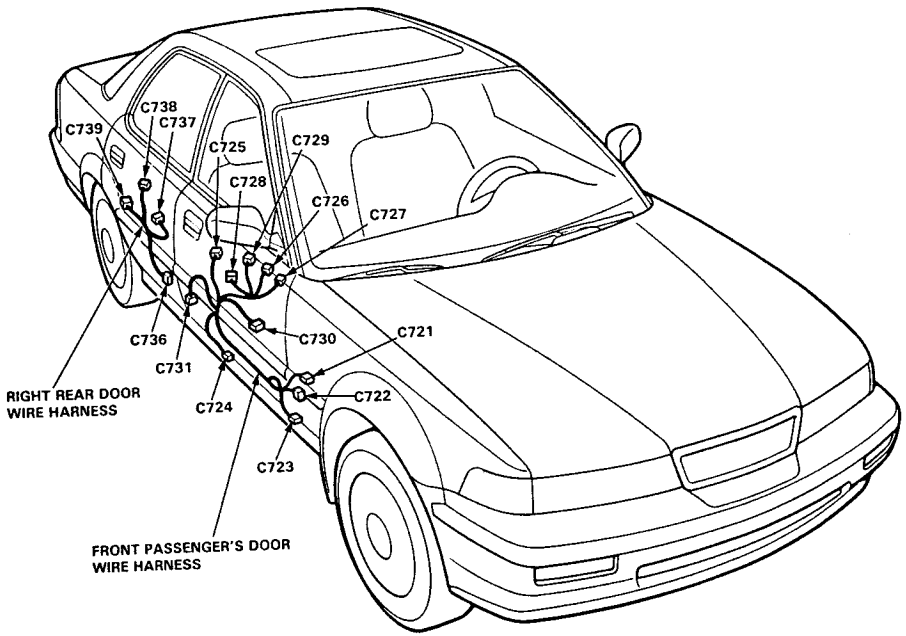

Connector Identification and Wire Harness Routing

Heater Sub-harness

Connector or Terminal	Number of Cavities	Location	Connects to	Notes
C651	22	Under right side of dash	Heater control amplifier	
C652	3	Under right side of dash	Power transistor	
C653	4	Under right side of dash	Blower motor high relay	
C654	3	Under right side of dash	Main wire harness (C444)	
C655	2	Under right side of dash	Blower motor	
C656	7	Under right side of dash	Air mixture control motor	
C657	7	Under left side of dash	Recirculation control motor	
C658	2	Under left side of dash	Evaporator temperature sensor	
C659	7	Under left side of dash	Mode control motor	

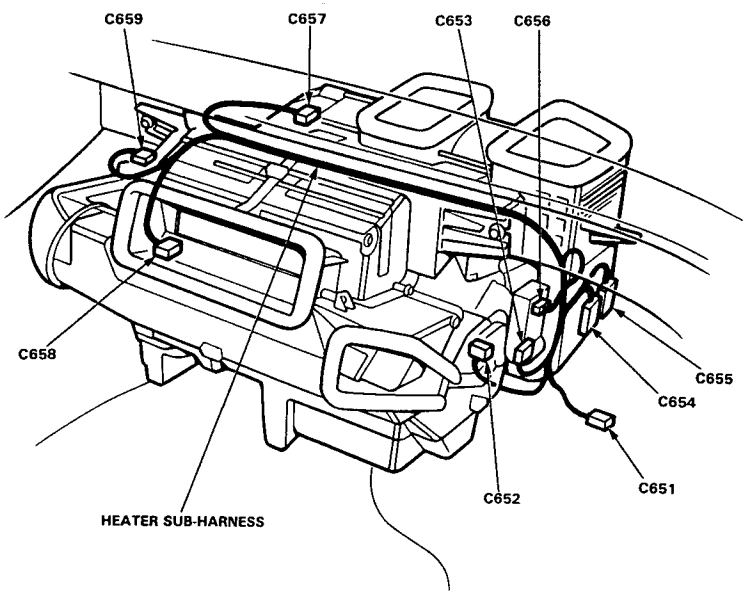

Driver's Power Seat Wire Harness

Connector or Terminal	Number of Cavities	Location	Connects to	Notes
C741	4	Left side of floor	Main wire harness (C415)	USA
C741	8	Left side of floor	Main wire harness (C415)	Canada
C742	2	Driver's seat-back	Recline motor	
C743	2	Under driver's seat	Slide motor	
C744	6	Left side of driver's seat	Driver's power seat slide switch	
C745	6	Left side of driver's seat	Driver's power seat recline switch	
C746	4	Under driver's seat	Seat heater main relay	Canada
C747	2	Under driver's seat	Seat-back heater	Canada
C748	4	Under driver's seat	Seat cushion heater	Canada
C749	6	Under driver's seat	Seat heater relay	Canada

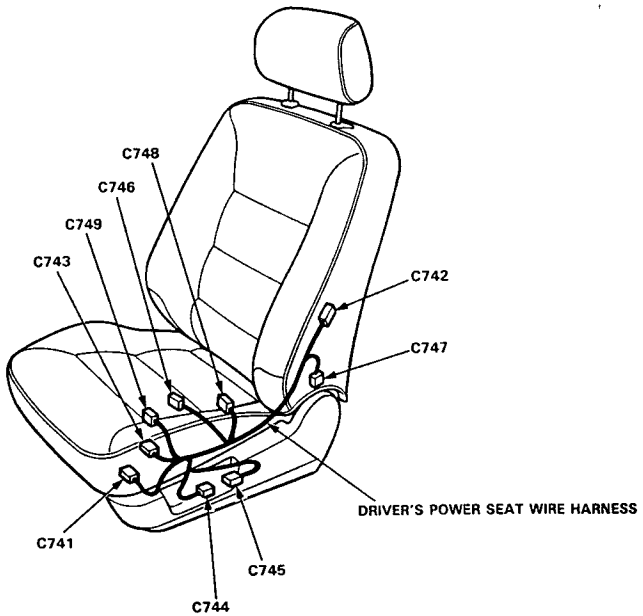

Roof Wire Harness

Connector or Terminal	Number of Cavities	Location	Connects to	Notes
C751	1	Roof area	Front passenger's vanity mirror light	
C752	2	Roof area	Right overhead speaker	
C753	4	Roof area	Ceiling light	
C754	2	Roof area	Left overhead speaker	
C755	4	Left C-pillar area	Left rear reading light	
C756	8	Left C-pillar area	Rear wire harness (C508)	
C757	2	Roof area	Moonroof motor	
C758	2	Right C-pillar area	Rear wire harness (C517)	
C759	3	Right C-pillar area	Right rear reading light	
C760	1	Roof area	Driver's vanity mirror light	

Fuel Unit Sub-harness

Connector or Terminal	Number of Cavities	Location	Connects to	Notes
C761	4	Fuel tank	Rear wire harness (C515)	
C762	3	Fuel tank	Fuel gauge sending unit	
C763	2	Fuel tank	Fuel pump (FP)	

Rear Window Defogger Ground Wire

Connector or Terminal	Number of Cavities	Location	Connects to	Notes
C771	1	Left C-pillar area	Rear window defogger	
G771		Left side of rear shelf	Body ground, via rear window defogger ground wire	

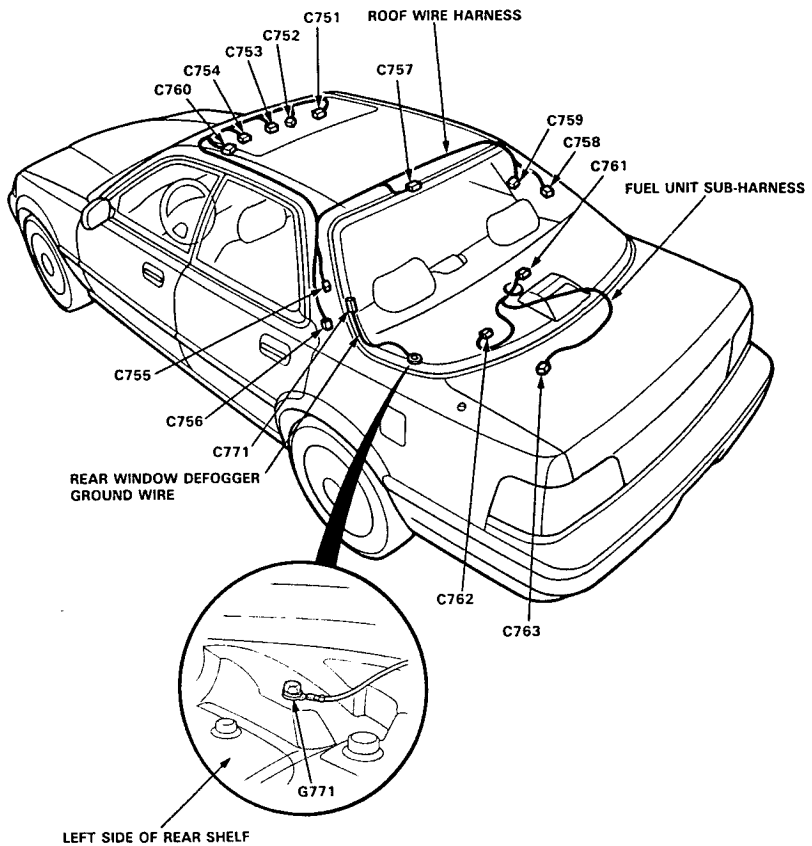

Connector Identification and Wire Harness Routing

SRS Main Harness

Connector or Terminal	Number of Cavities	Location	Connects to	Notes
C801	2	Behind left kick panel	Under-dash fuse/relay box (C906)	
C802	4	Under left side of dash	Main wire harness (C424)	
C803	2	Under left side of dash	Left dash sensor	
C804	6	Under left side of dash	Cable reel	
C805	18	Middle of floor	SRS unit	
C806	2	Under right side of dash	Right dash sensor	
C807	3	Behind glove box	Passenger's airbag assembly	
G801		Middle of floor	Body ground, via SRS wire harness	

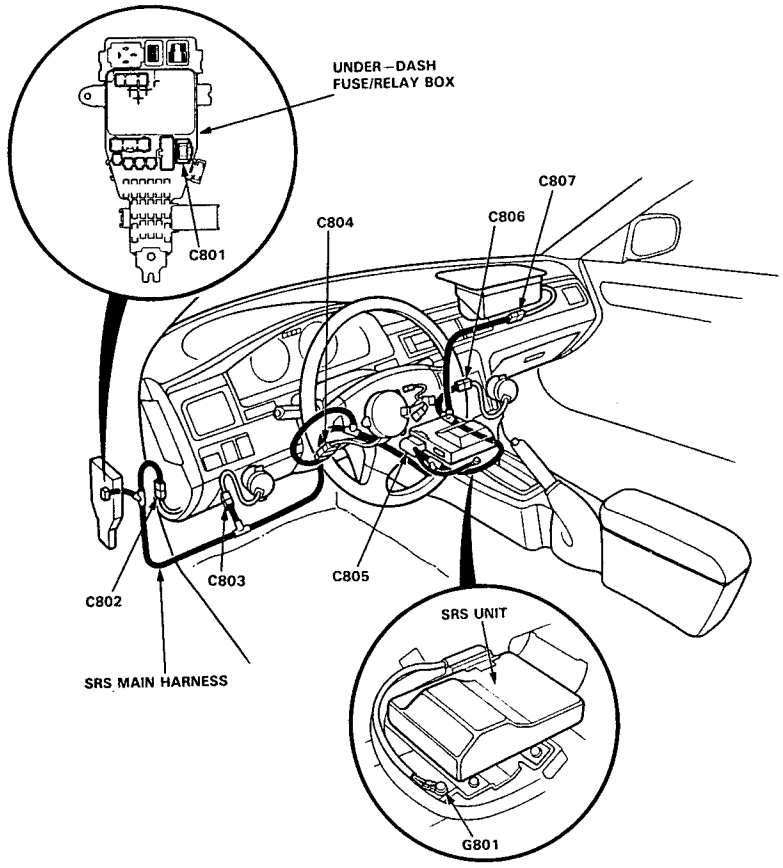

Fuses

Under-hood Fuse/Relay Box

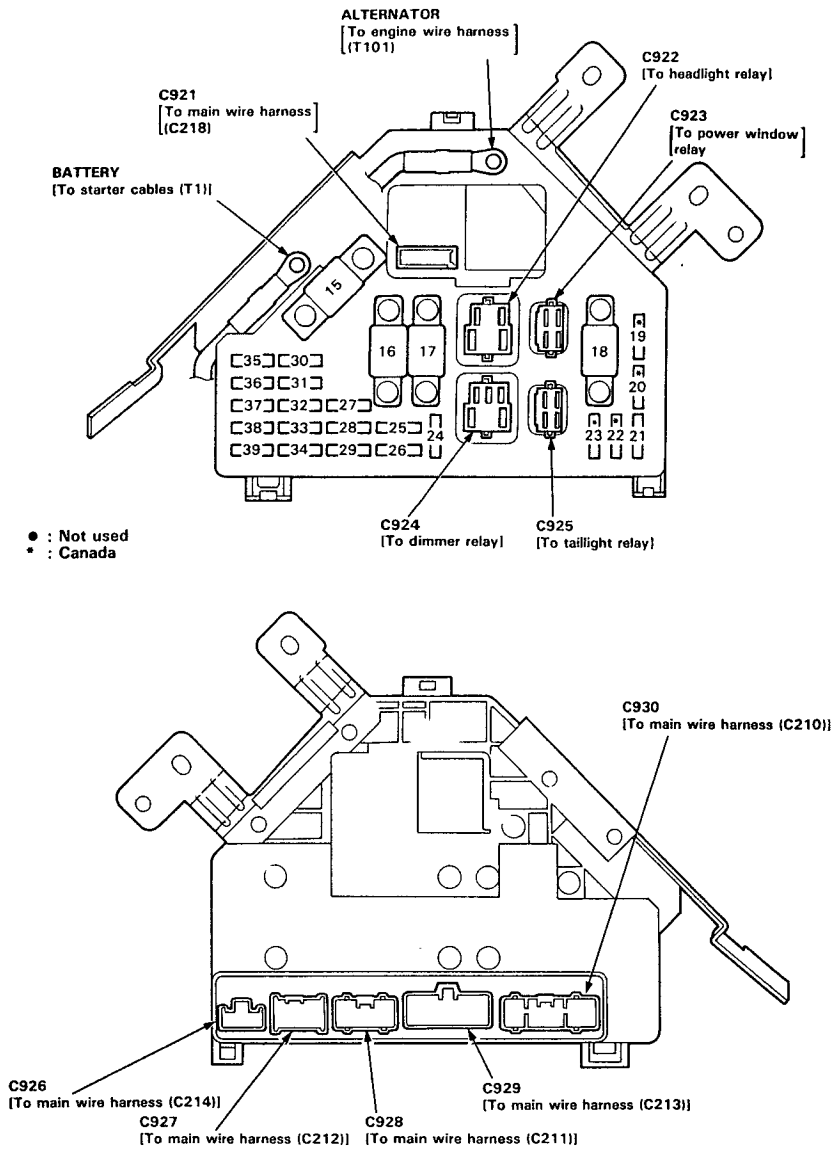

Fuse Number	Amps	Wire color	Component or circuit protected
15	100 A	–	Battery, Power distribution
16	40 A	YEL/GRN	Rear window defogger, Noise condenser
17	30 A	BLU/WHT	Blower motor
18	50 A	WHT	Ignition switch (BAT)
19	20 A	RED/YEL	Left headlight, Daytime running lights control unit (Canada)
20	20 A	RED/GRN	Right headlight, Daytime running lights control unit (Canada)
21	15 A	RED/GRN	Dash lights, Parking lights, Security control unit
22	15 A	WHT/BLK	Seat heater system (Canada)
23	–	–	Not used
24	20 A	YEL/BLK	Right rear power window motor
25	20 A	GRN/BLK	Left rear power window motor
26	20 A	BLU/BLK	Front passenger's power window motor
27	20 A	WHT/RED	Driver's power seat recline motor
28	20 A	WHT/YEL	Driver's power window motor, Power window control unit
29	30 A	GRN	Moonroof motor
30	20 A	WHT/YEL	Horns, Brake lights, Security control unit
31	20 A	WHT/GRN	Driver's power seat slide motor
32	20 A	WHT	Power door lock control unit
33	10 A	YEL/BLU	PGM-FI main relay
34	15 A	WHT	Condenser fan motor
35	10 A	WHT/GRN	Hazard warning lights, Turn signal/hazard relay
36	15 A	BLU/RED	Front fog lights
37	15 A	WHT/BLU	Ceiling light, Cigarette lighter, Power antenna motor, Power mirror defoggers, Integrated control unit
38	15 A	WHT	Radiator fan motor
39	10 A	WHT/GRN	ECM, Transmission control module (TCM), Clock, Radiator fan control module, Stereo radio/cassette player, Audio power amplifier unit

Fuses

Under-dash Fuse Box

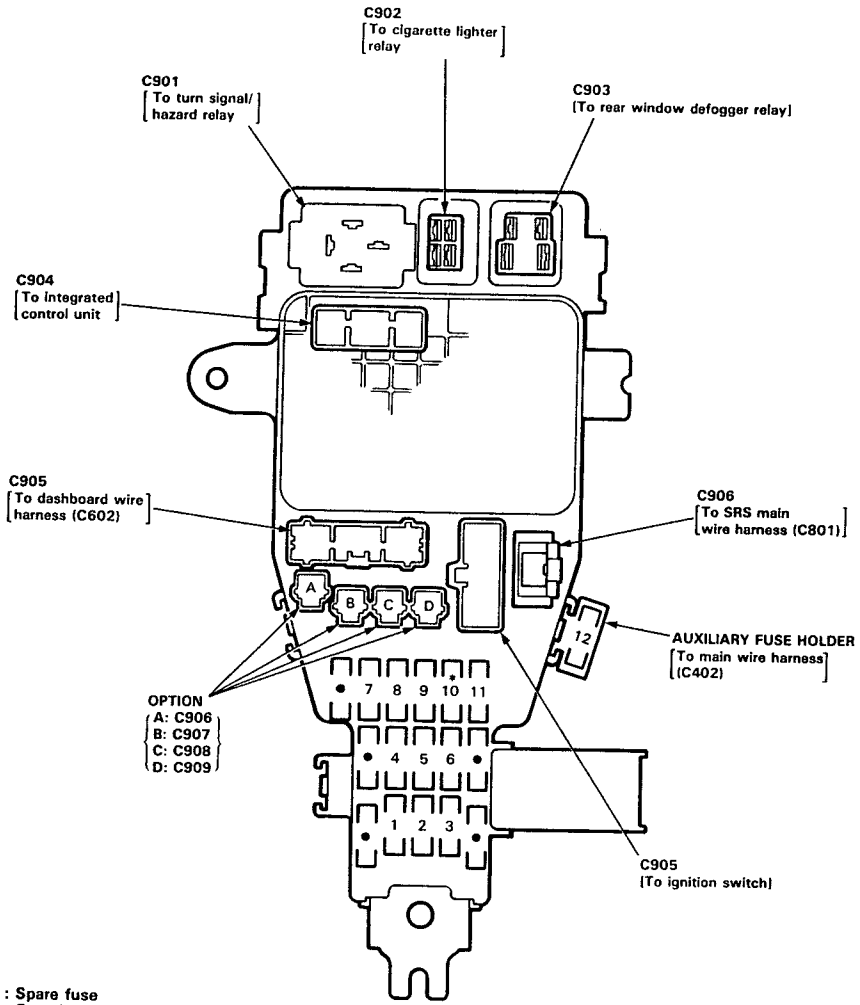

● : Spare fuse
* : Canada

Fuse Number	Amps	Wire color	Component or circuit protected
1	10 A	YEL	Back-up lights, Gauge/indicator lights, Clock, Vehicle speed sensor (VSS)
		Internal connection	Integrated control unit
2	15 A	BLK/YEL	ECM, PGM-FI main relay, ELD unit, Alternator, Radiator fan control module, EGR control solenoid valve
		RED	SRS unit (VA)
3	10 A	PNK	SRS unit (VB)
4	7.5 A	BLK/RED	Cruise control system, Transmission control module (TCM), Security control unit
5	10 A	YEL/RED	Moonroof open relay, Moonroof close relay, Windshield wiper system, Shift lock solenoid (A/T)
6	30 A	GRN/BLK	Windshield wiper motor
7	7.5 A	BLK/YEL	Heater control amplifier, Heater control panel, Blower motor relay, Blower motor high relay, ABS control unit, ABS fail-safe relays, ABS motor relay
		Internal connection	Option B (IG2) connector
8	7.5 A	YEL/BLK	Power mirror actuators, Power mirror defogger relay (Canada), A/C compressor clutch, A/C compressor clutch relay, Radiator fan control module, Driver's seat heater main relay, Front passenger's seat heater main relay
9	7.5 A	BLU/RED	ECM, Gauge (Brake check circuit)
10	7.5 A	YEL/BLK	Daytime running lights control unit (Canada)
11	10 A	YEL/RED	Stereo radio/cassette player, Audio power amplifier unit
		Internal connection	Option A (ACC)connector, Cigarette lighter relay
*12	7.5 A	BLK/YEL	Turn signal/hazard relay

*: AUXILIARY FUSE HOLDER

(cont'd)

Under-dash Fuse/Relay Box (cont'd)

NOTE: View from back side of the under-dash fuse/relay box.

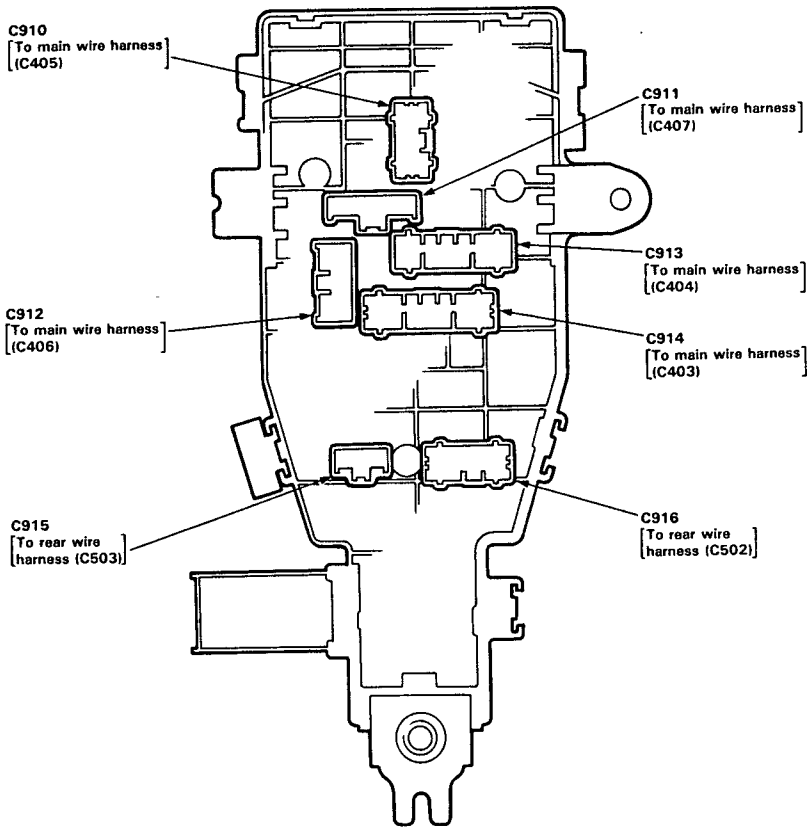

Under-hood ABS Fuse/Relay Box

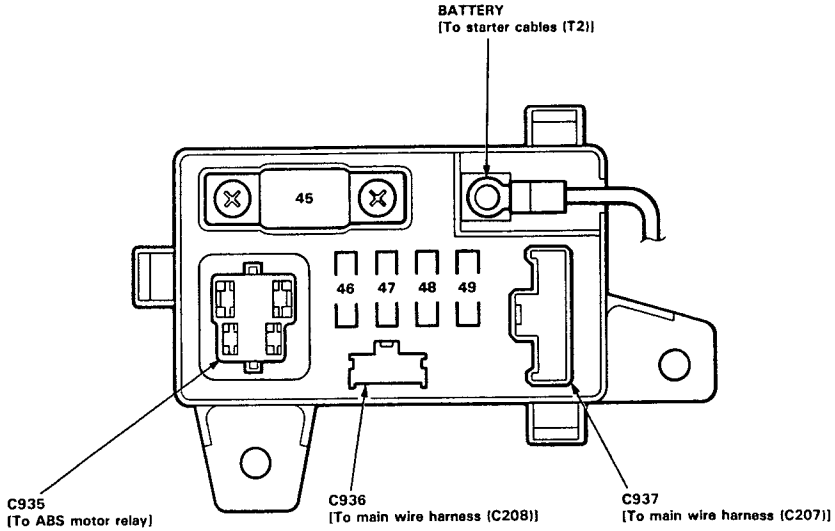

Fuse Number	Amps	Wire color	Component or circuit protected
45	5 0 A	–	ABS motor relay (contacts)
46	7.5 A	WHT/RED	ABS control unit
47	1 5 A	WHT/BLK	ABS control unit (B3)
48	1 5 A	WHT	ABS control unit (B2)
49	1 5 A	WHT/GRN	ABS control unit (B1)

Power Distribution

Circuit Identification

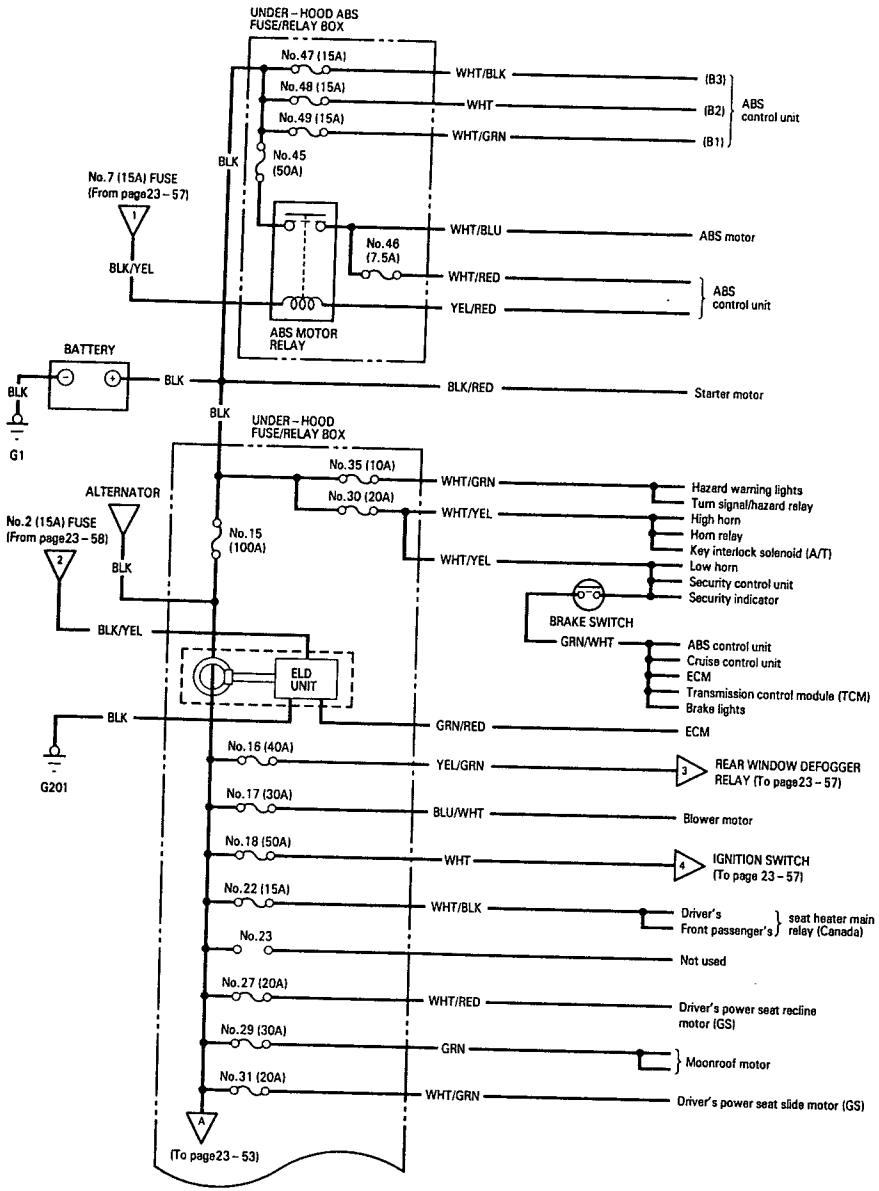

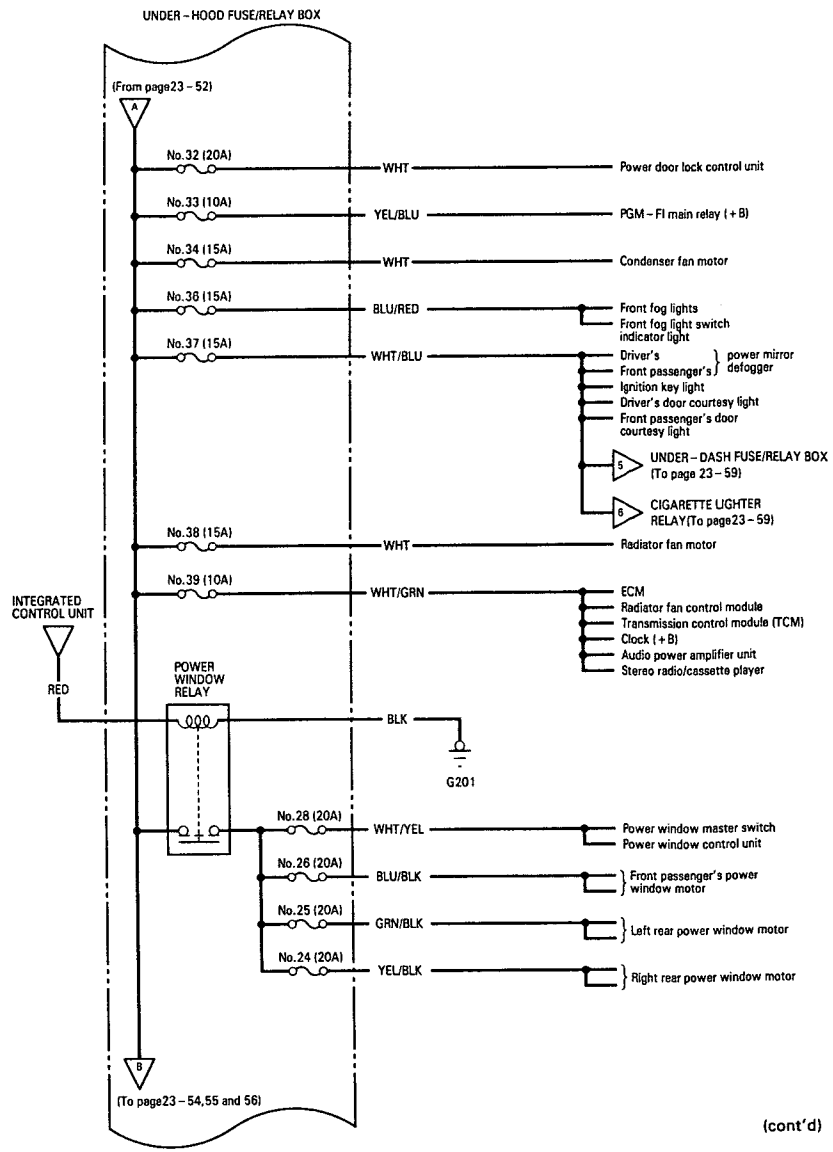

(cont'd)

Power Distribution

Circuit Identification (cont'd)

USA:

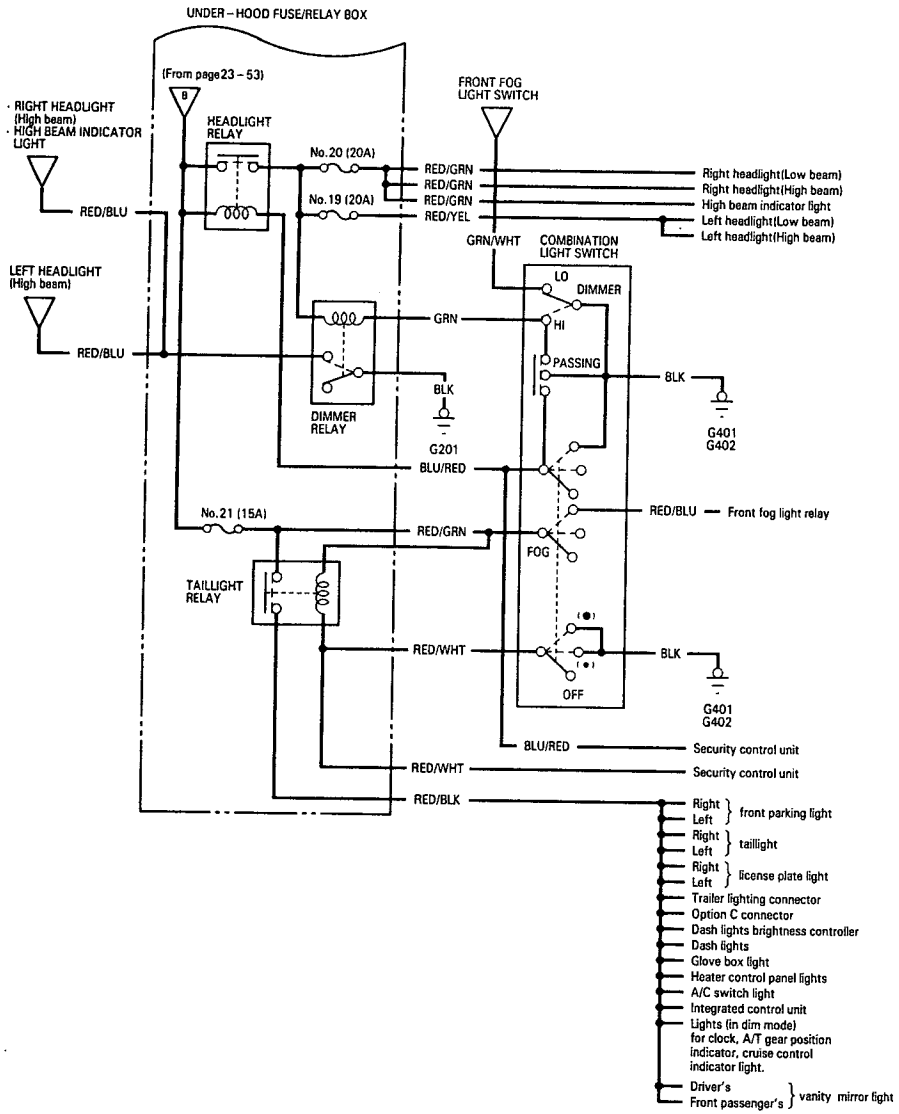

Canada (With security system):

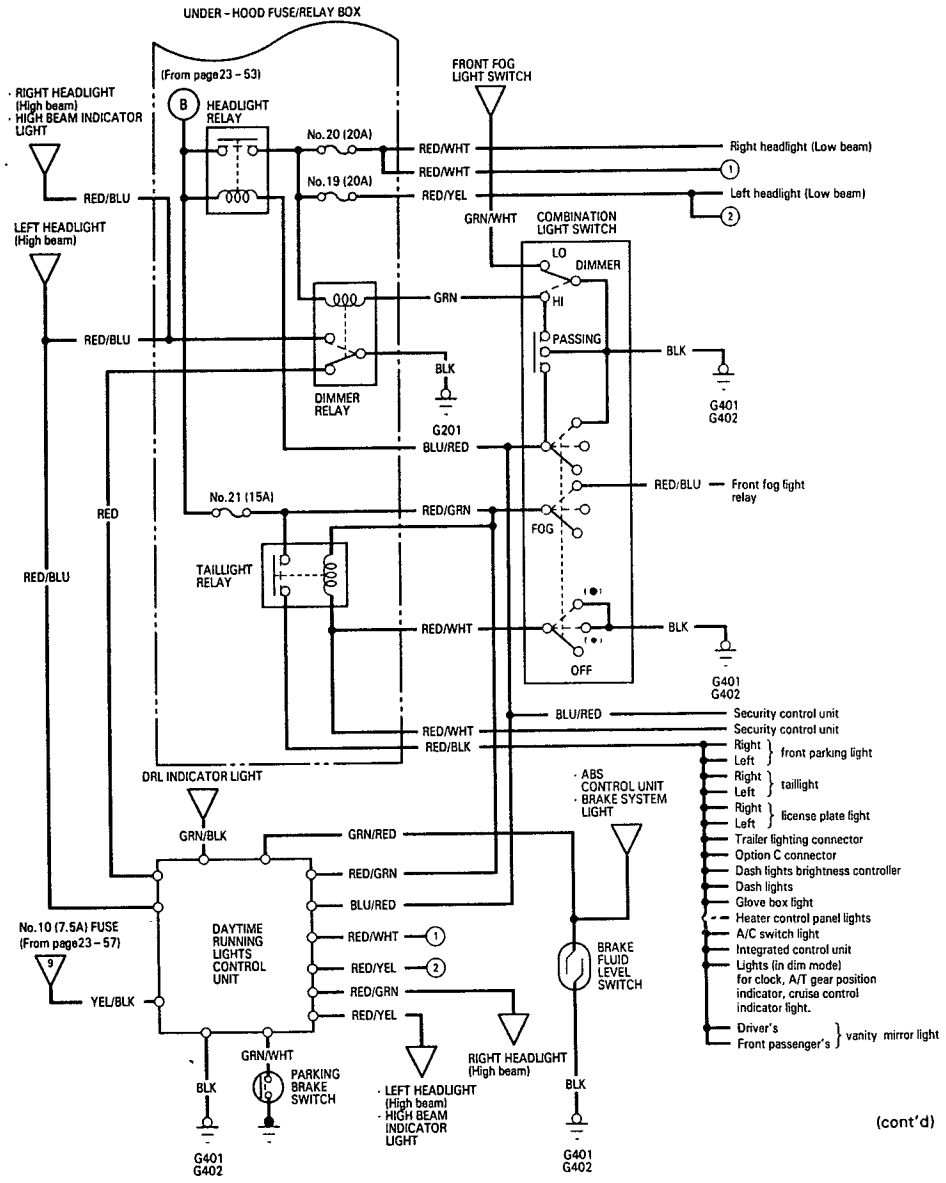

(cont'd)

Power Distribution

Circuit Identification (cont'd)

Canada (Without security system):

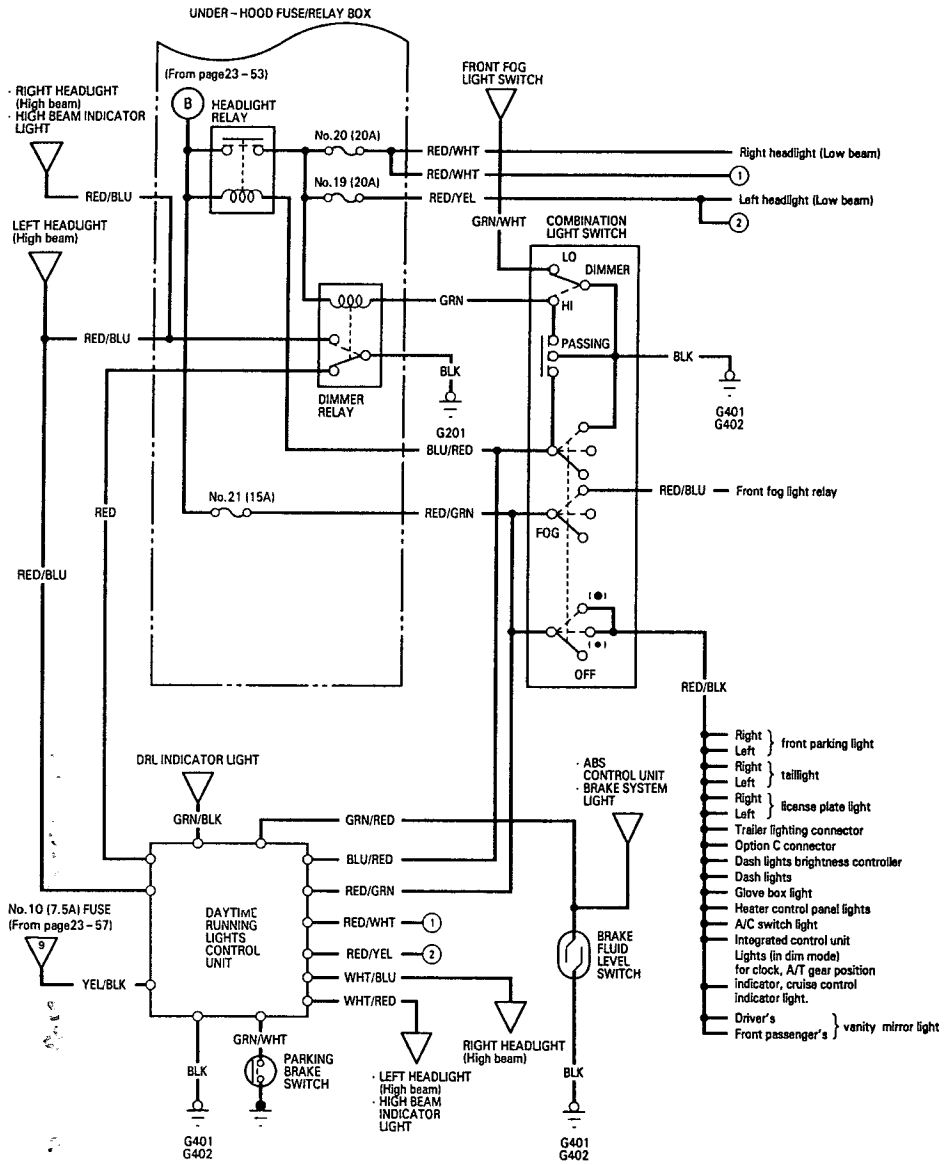

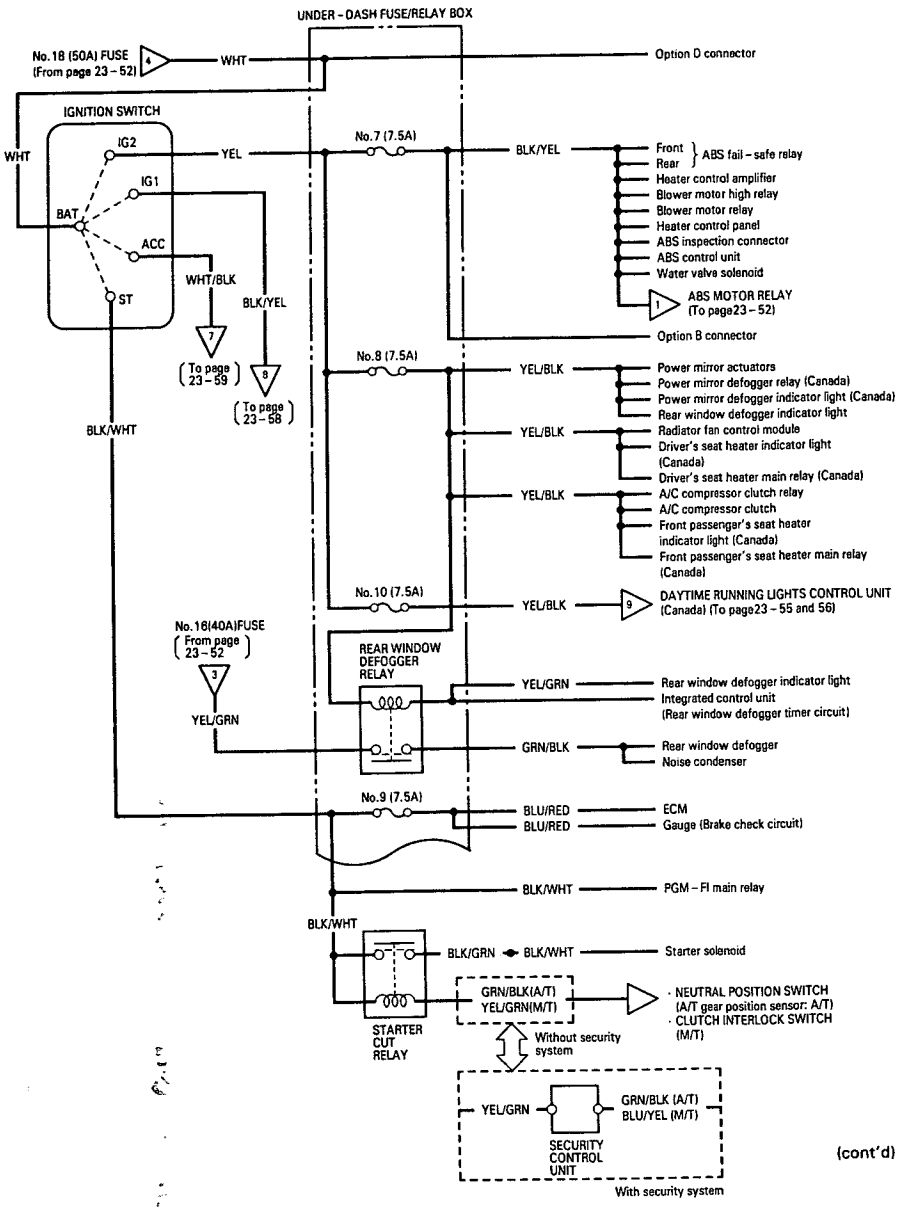

(cont'd)

Power Distribution

Circuit Identification (cont'd)

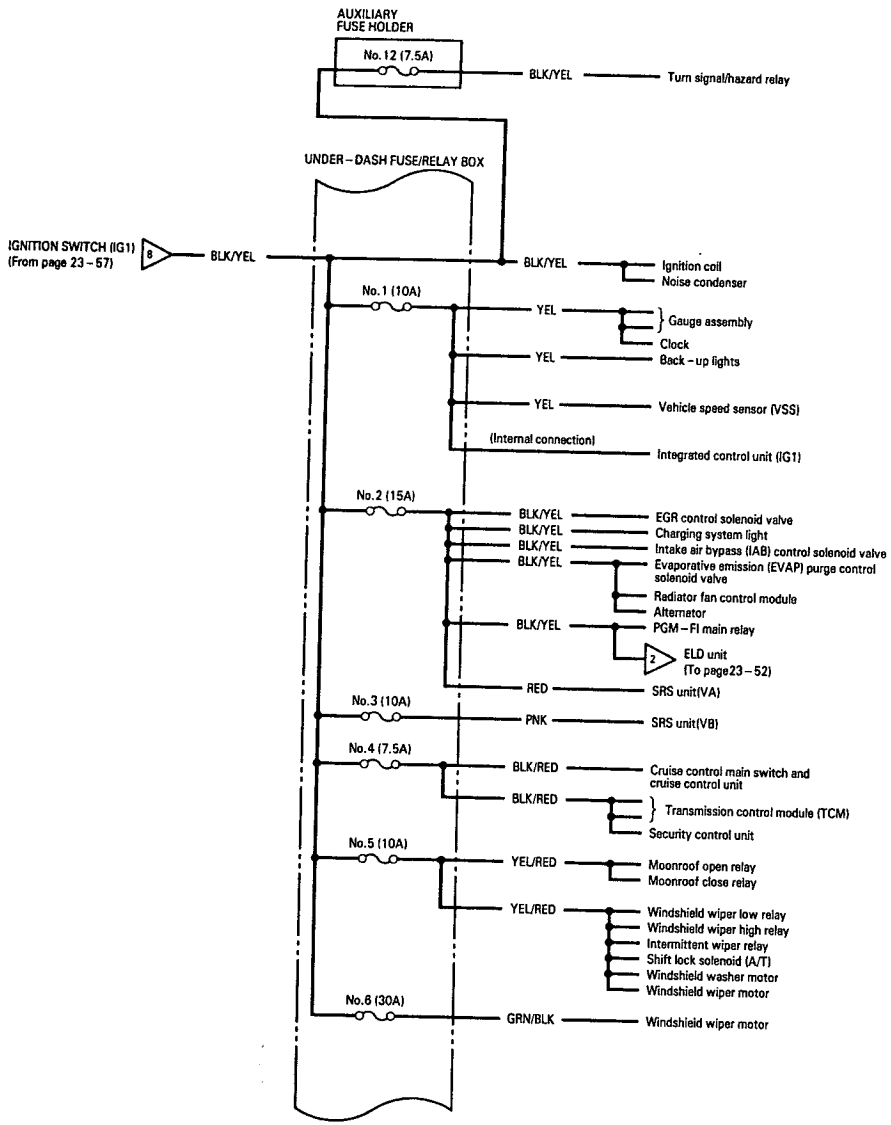

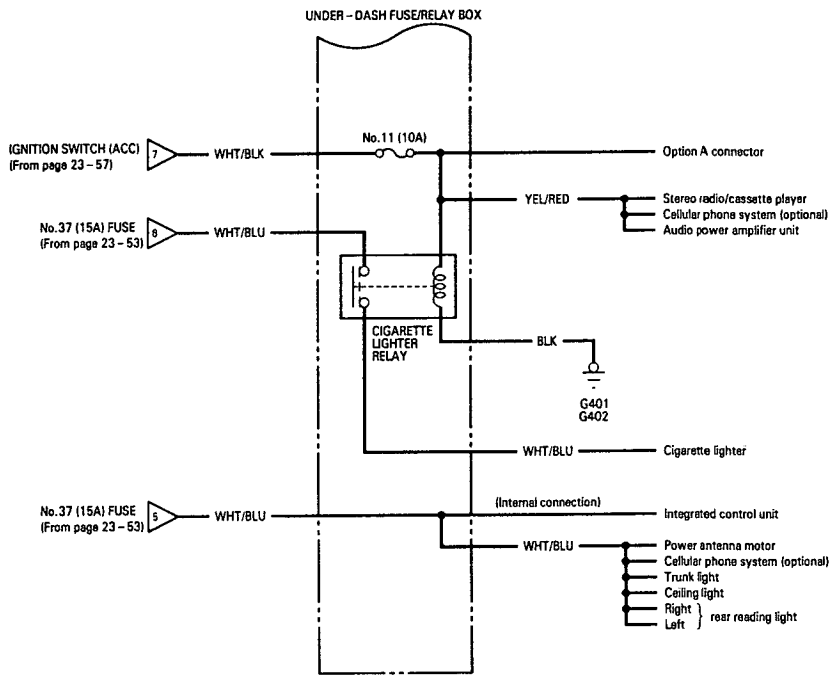

Ground Distribution

Circuit Identification

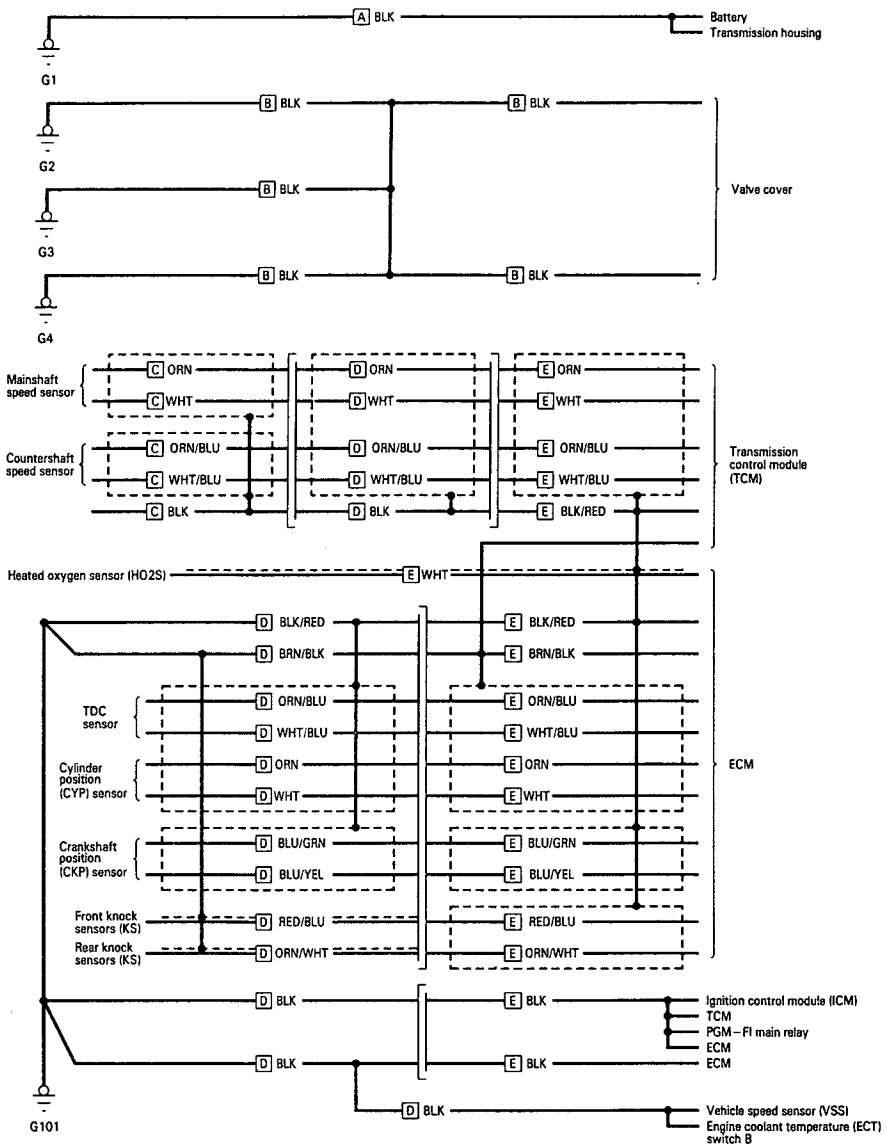

A : Battery ground cables
B : Engine ground cables
C : A/T sub-harness
D : Engine wire harness
E : Main wire harness
- - - - : Shield wire

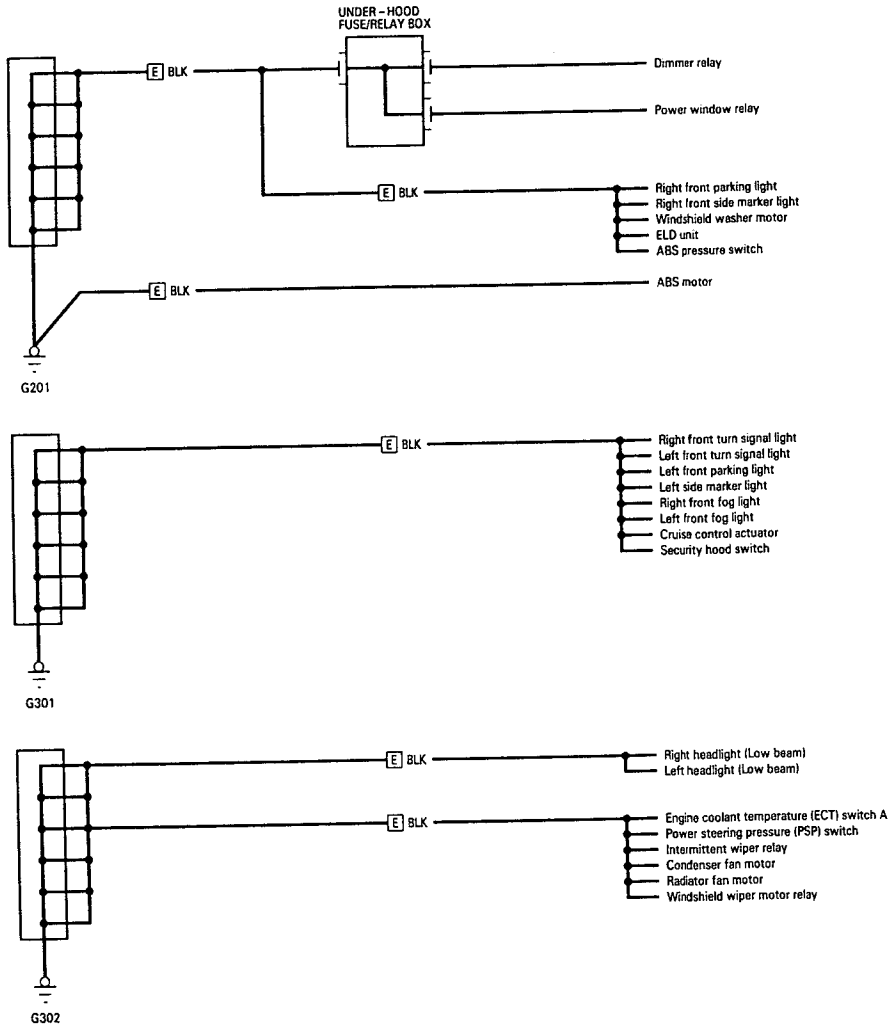

E : Main wire harness

(cont'd)

Ground Distribution

Circuit Identification (cont'd)

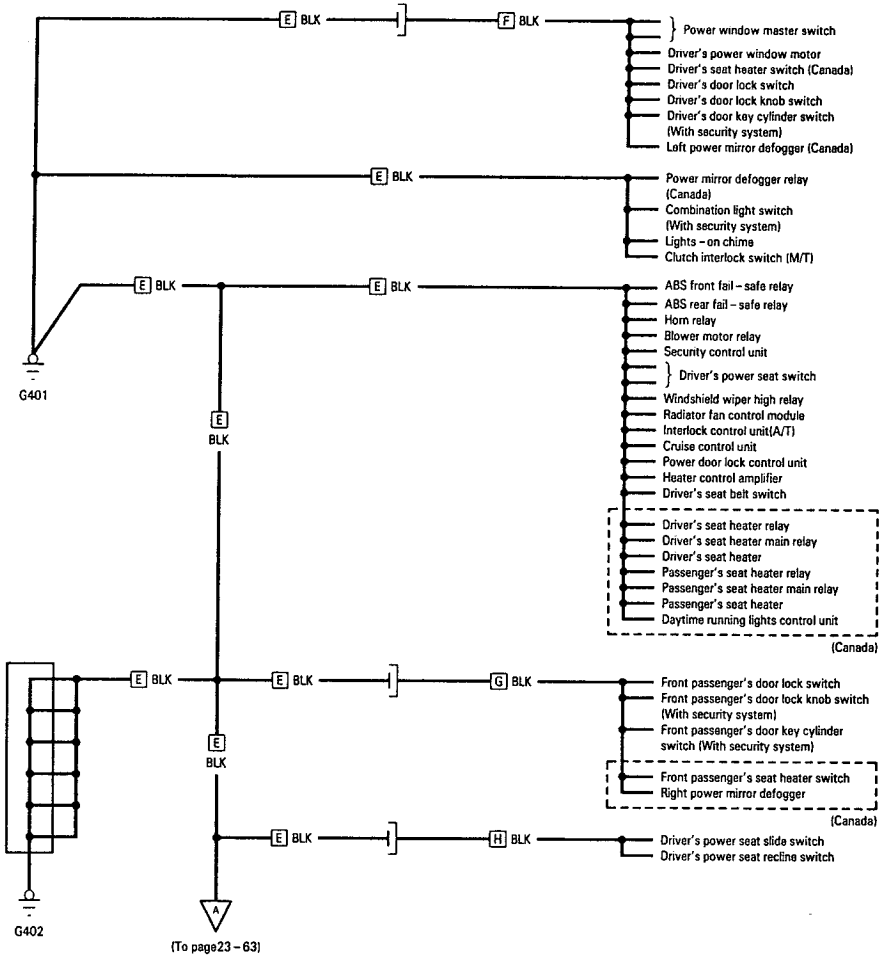

E : Main wire harness
F : Driver's door wire harness
G : Front passenger's door wire harness
H : Driver's power seat wire harness

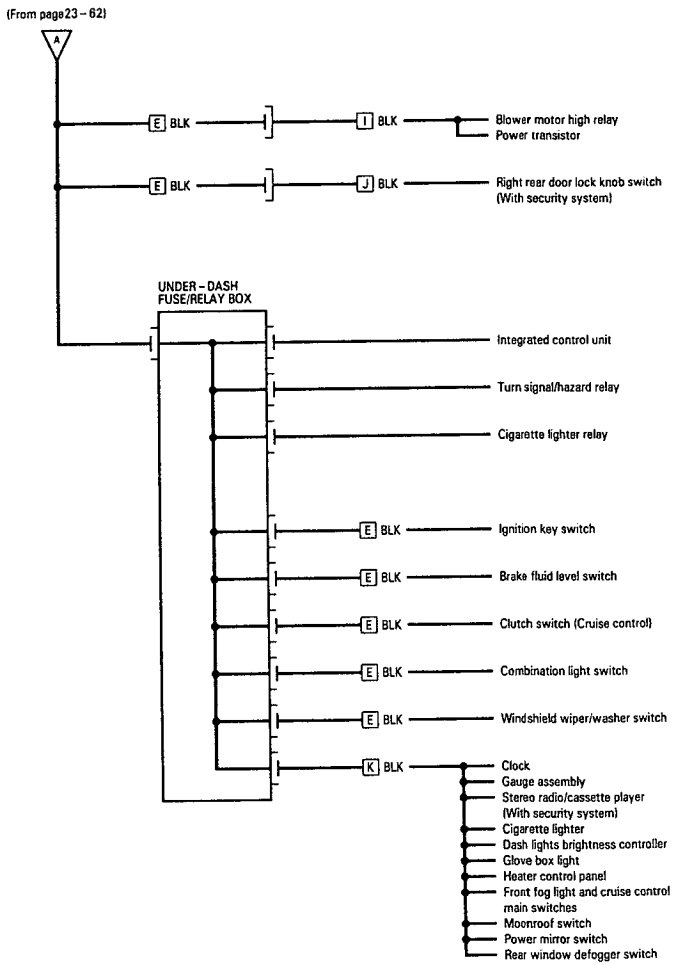

E : Main wire harness
I : Heater sub – harness
J : Right rear door wire harness
K : Dashboard wire harness

(cont'd)

Ground Distribution

Circuit Identification (cont'd)

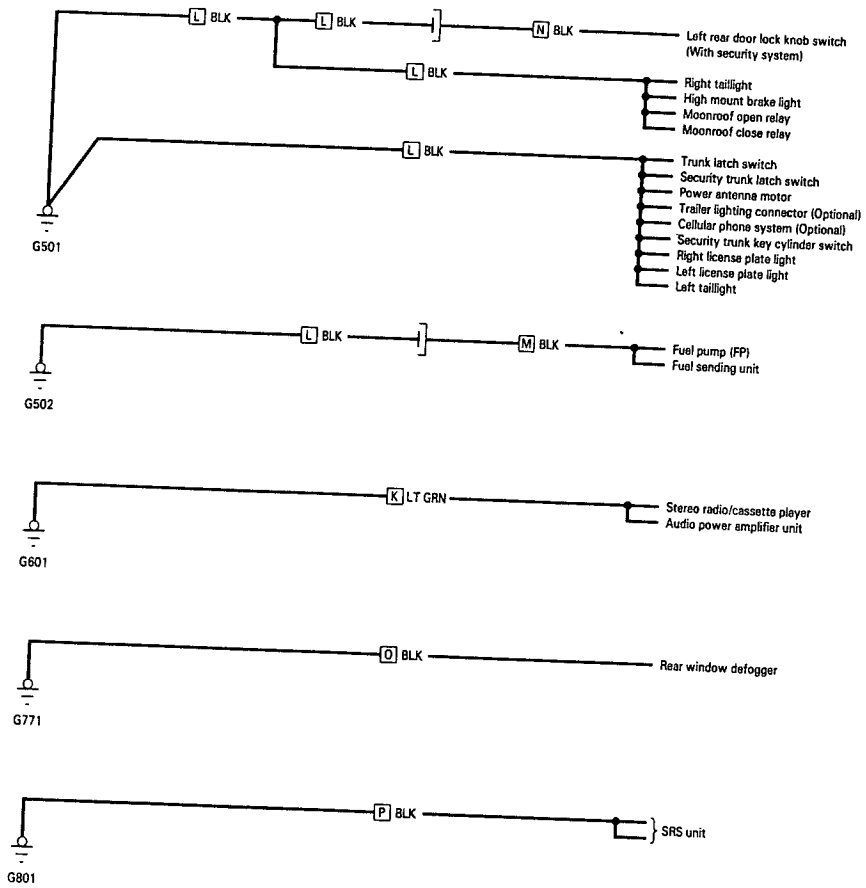

K : Dashboard wire harness
L : Rear wire harness
M : Fuel unit sub-harness
N : Left rear door wire harness
O : Rear window defogger ground wire
P : SRS wire harness

Under-dash Fuse/Relay Box

Removal/Installation

CAUTION:
- **All SRS electrical wiring harnesses are covered with yellow outer insulation.**
- **Before disconnecting the SRS wire harness, install the short connector (s) on the airbag (s).**
- **Replace the entire affected SRS harness assembly if it has an open circuit or damaged wiring.**

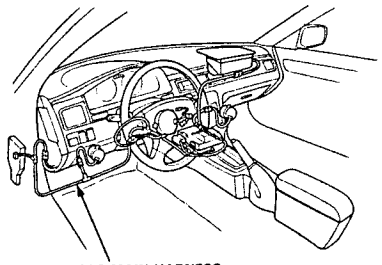

NOTE: The radio may have a coded theft protection circuit. Be sure to get the customer's code number before
- Disconnecting the battery.
- Removing the No.39 (10 A) fuse in the under-hood fuse/relay box.
- Removing the radio.

After service, reconnect power to the radio and turn it on. When the word "CODE" is displayed, enter the customer's 5-digit code to restore radio operation.

1. Disconnect the battery negative cable, then disconnect the positive cable.
2. Remove the access panel from the steering wheel, then remove the short connector (RED).
3. Disconnect the 3-P connector between the driver's airbag and cable reel.

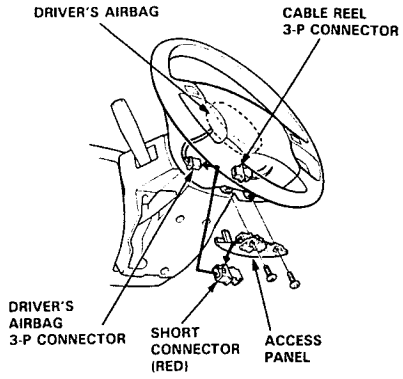

4. Connect the short connector (RED) to the airbag side of the connector.
5. Remove the glove box.
6. Disconnect the 3-P connector between the front passenger's airbag and SRS main harness, and connect the short connector (RED) to the airbag side of the connector.

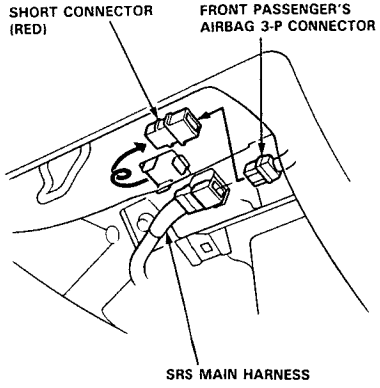

(cont'd)

Under-dash Fuse/Relay Box

Removal/Installation (cont'd)

6. Remove the dashboard lower cover, knee bolster, and dashboard lower frame.

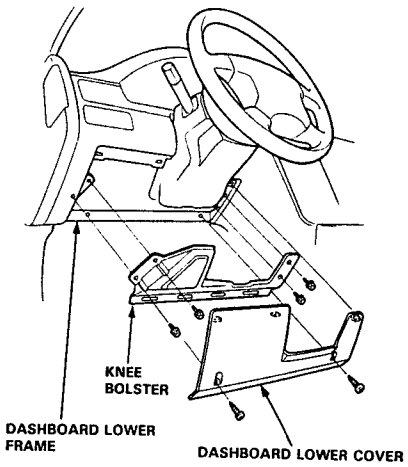

7. Remove the driver's foot rest (see section 20).

8. Remove the door sill molding and left kick panel.

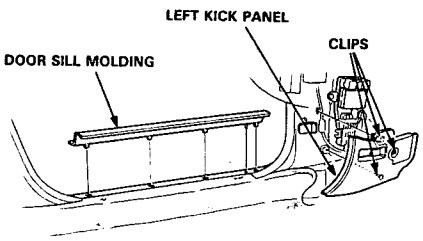

9. Remove the two mounting bolts and pull the under-dash fuse/relay box away from the left kick panel.

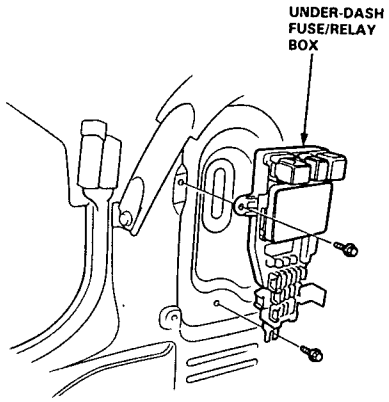

10. Disconnect the under-dash fuse/relay box connectors and take out the under-dash fuse/relay box.

NOTE: The SRS main harness connector is double-locked. To remove it, first lift the connector lid, then press the connector tab down and pull the connector out.

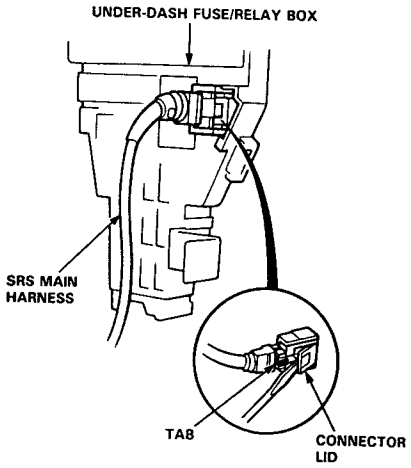

Installation:

1. Reconnect the connectors to the under-dash fuse/relay box.

   NOTE: To reinstall the SRS main harness connector, push it into position until it clicks, then close the connector lid.

2. Install the under-dash fuse/relay box.

3. Reinstall the dashboard lower frame, knee bolster and dashboard lower cover.

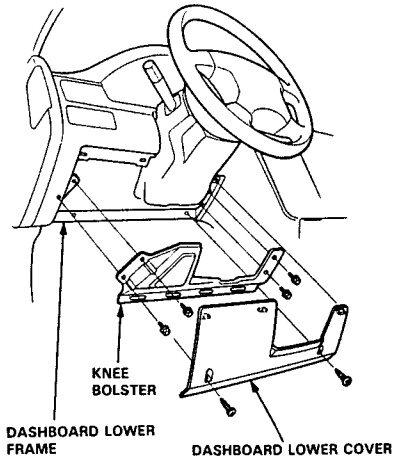

4. Disconnect the short connector (s) (RED) from the airbag(s).

5. Reconnect the airbag 2-P connector (s).

6. Attach the driver's airbag short connector (RED) to the access panel and reinstall the panel.

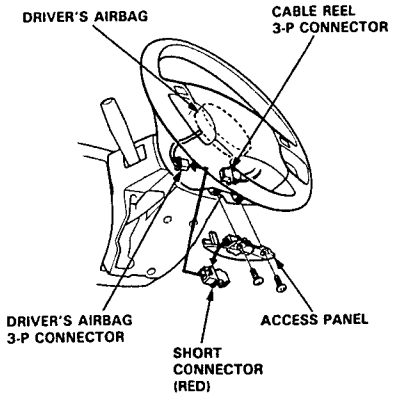

7. Reinstall the glove box.

8. Connect both the negative cable and positive cable to the battery.

9. Confirm that all systems work properly.

Test

⚠ WARNING

- **Battery fluid (electrolyte) contains sulfuric acid. It may cause severe burns if it gets on your skin or in your eyes. Wear protective clothing and a face shield.**
  - **If electrolyte gets on your skin or clothes, rinse it off with water immediately.**
  - **If electrolyte gets in your eyes, flush it out by splashing water in your eyes for at least 15 minutes; call a physician immediately.**
- **A battery gives off hydrogen gas. If ignited, the hydrogen will explode and could crack the battery case and splatter acid on you. Keep sparks, flames, and cigarettes away from the battery.**
- **Overcharging will raise the temperature of the electrolyte. This may force electrolyte to spray out of the battery vents. Follow the charger manufacturer's instructions and charge the battery at a proper rate.**

Use either a JCI or Bear ARBST tester, and follow the manufacturer's procedures. If you don't have one of these computerized testers, follow this conventional test procedure:
To get accurate results, the temperature of the electrolyte must be between 70 °F (21 °C) and 100 °F (38 °C).

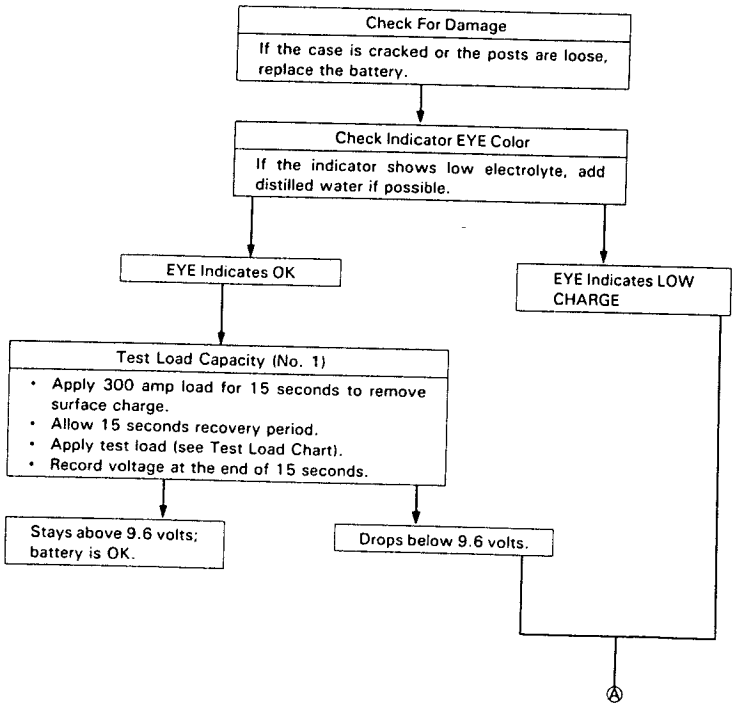

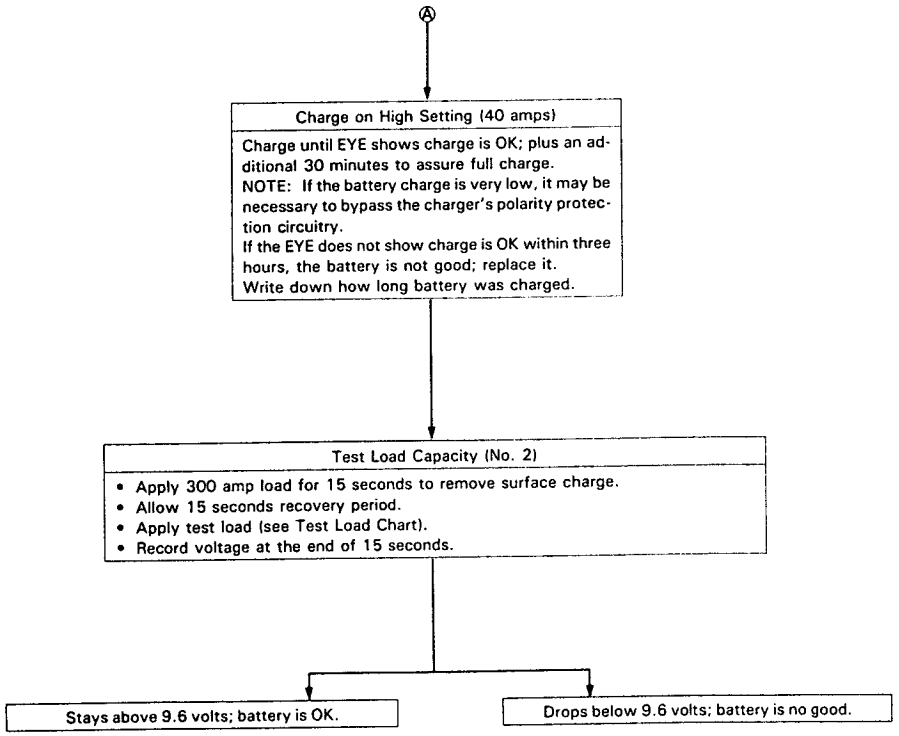

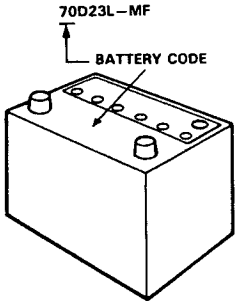

TEST LOAD CHART

Use the test load or 1/2 the cold cranking amps (CCA) printed on the label on the top of the battery. If neither is indicated, use the information below:

BATTERY CODE	COLD CRANKING AMPS (CCA)	LOAD (amps)
80	550	270
70	440	220
55	405	200

Power Relays

Relay Test

NOTE: See page 23-210 for turn signal/hazard relay input test and see page 23-280 for seat heater relay test.

1. Remove the power relay from its socket.

2. Check for continuity between the terminals.
   - There should be continuity between the C and D terminals

   Normally Open-type:
   - There should be continuity between the A and B terminals when power and ground are connected to the C and D terminals.
   - There should be no continuity between the A and B terminals when power is disconnected.

Terminal / Power (C – D)	A	B
Disconnected		
Connected	○	○

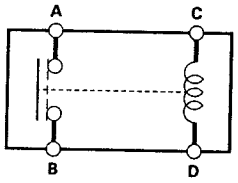

Normally Closed-type:
(Windshield wiper low relay)
- There should be no continuity between the A and B terminals when power and ground are connected to the C and D terminals.
- There should be continuity when power is disconnected.

Terminal / Power (C – D)	A	B
Disconnected	○	○
Connected		

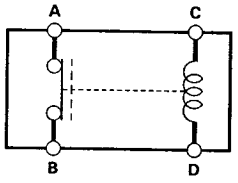

- Horn relay
- Cigarette lighter relay
- Power window relay
- ABS front fail-safe relay
- ABS rear fail-safe relay
- Blower motor relay
- Front fog light relay
- Taillight relay

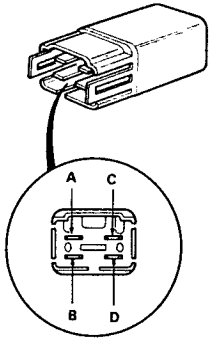

- A/C compressor clutch relay
- Windshield wiper low relay
- Windshield wiper high relay

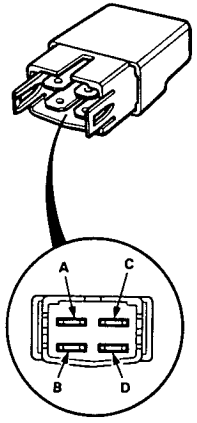

- Blower motor high relay

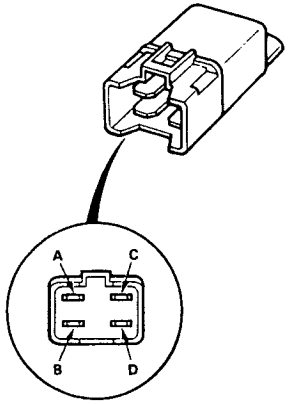

- Seat heater main relay
- Power mirror defogger relay
- Starter cut relay

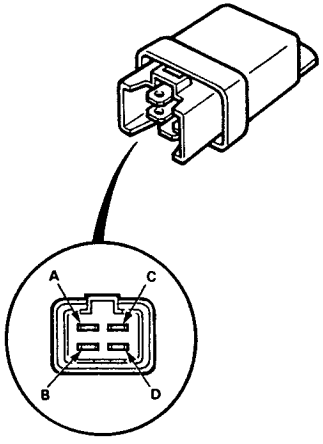

- Condenser fan relay
- Radiator fan relay

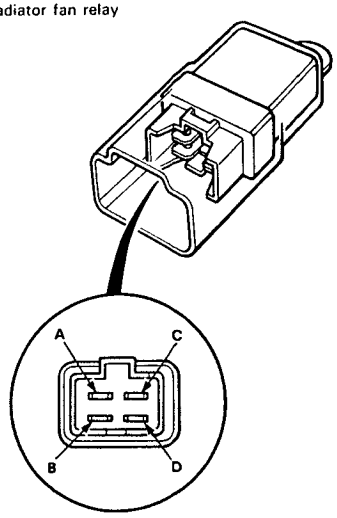

- Headlight relay
- Rear window defogger relay
- ABS motor relay

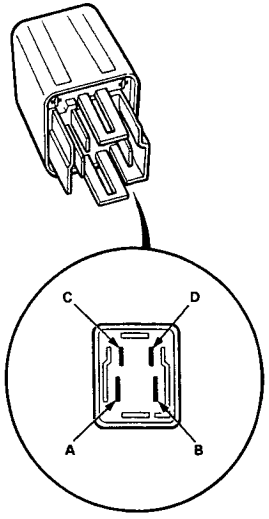

(cont'd)

Power Relays

Relay Test (cont'd)

FIVE-TERMINAL type:

1. Remove the power relay from its socket.
2. Check for continuity between the terminals.
   - There should be continuity between the D and E terminals.
   - There should be continuity between the A and C terminals when power and ground are connected to the D and E terminals.
   - There should be continuity between the B and C terminals when power is disconnected.

Terminal / Power (D – E)	A	B	C
Disconnected		○——	——○
Connected	○——	——	——○

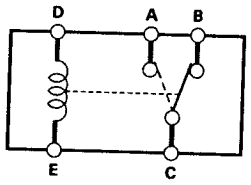

- Dimmer relay

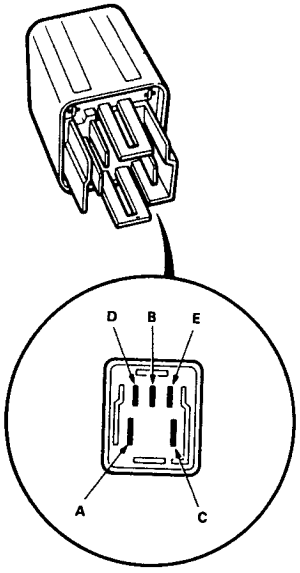

- Intermittent wiper relay

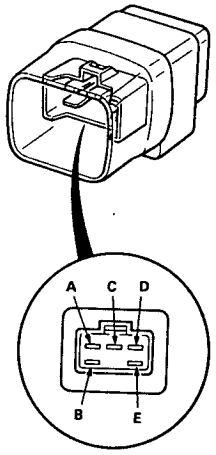

- Moonroof open relay
- Moonroof close relay

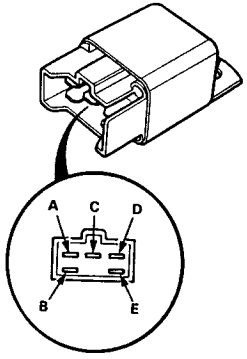

Ignition Switch

Test

CAUTION:

- **All SRS electrical wiring harnesses are covered with yellow outer insulation.**
- **Before disconnecting the SRS wire harness, install the short connector (s) on the airbag (s).**
- **Replace the entire affected SRS harness assembly if it has an open circuit or damaged wiring.**

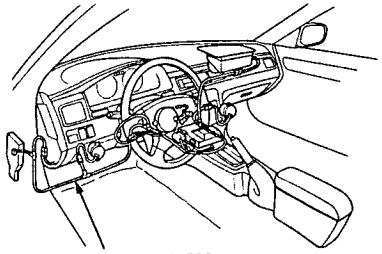

1. Remove the dashboard lower cover, left knee bolster and left kick panel.
2. Disconnect the 7-P connector from the under-dash fuse/relay box.

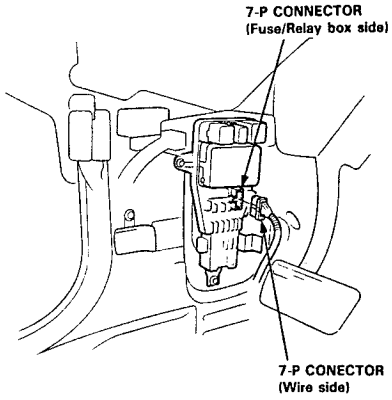

3. Check for continuity between the terminals in each switch position according to the table.

Terminal / Position	WHT/BLK (ACC)	WHT (BAT)	BLK/YEL (IG1)	YEL (IG2)	BLK/WHT (ST)
0					
I	○——	——○			
II	○——	——○	——○	——○	
III		○——	——○	——	——○

4. If the continuity checks do not agree with the table, replace the electrical switch.

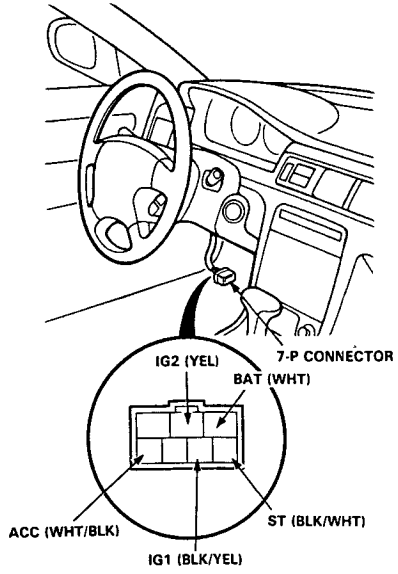

View from wire side

Ignition Switch

Electrical Switch Replacement

CAUTION:
- **All SRS electrical wiring harnesses are covered with yellow outer insulation.**
- **Before disconnecting the SRS wire harness, install the short connector (s) on the airbag (s).**
- **Replace the entire affected SRS harness assembly if it has an open circuit or damaged wiring.**

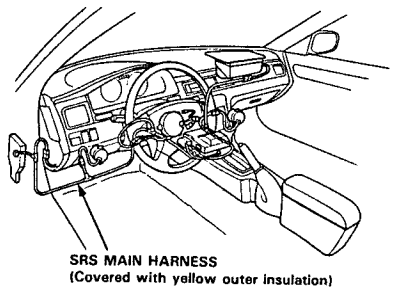

1. Disconnect the battery negative cable, then disconnect the positive cable.
2. Remove the dashboard lower cover and knee bolster (see page 23-66).
3. Disconnect the 7-P connector from the under-dash fuse/relay box.

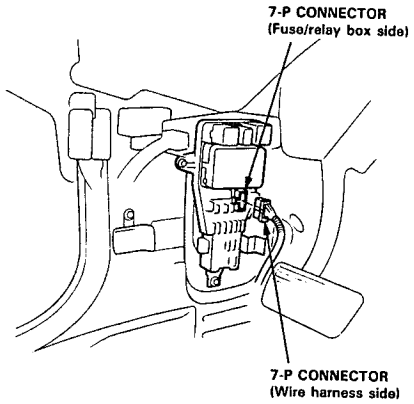

4. Remove the steering column covers.

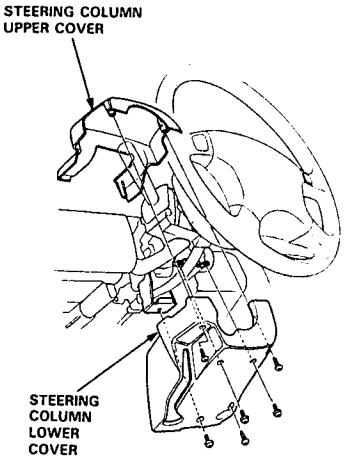

5. Insert the key and turn it to "0".
6. Remove the two screws and replace the electrical switch.

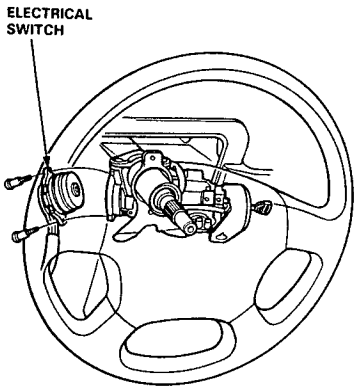

Steering Lock Replacement

CAUTION:
- **All SRS electrical wiring harnesses are covered with yellow outer insulation.**
- **Before disconnecting the SRS wire harness, install the short connector (s) on the airbag (s).**
- **Replace the entire affected SRS harness assembly if it has an open circuit or damaged wiring.**

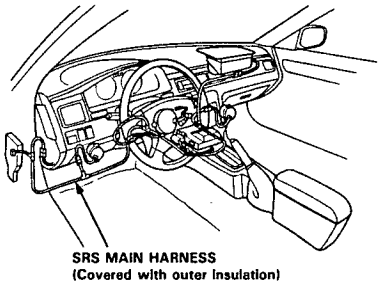

NOTE: The radio may have a coded theft protection circuit. Be sure to get the customer's code number before
- Disconnecting the battery.
- Removing the No.39 (10 A) fuse in the under-hood fuse/relay box.
- Removing the radio.

After service, reconnect power to the radio and turn it on. When the word "CODE" is displayed, enter the customer's 5-digit code to restore radio operation.

1. Disconnect the battery negative cable, then disconnect the positive cable.
2. Remove the dashboard lower cover and knee bolster (see page 23-66).
3. Disconnect the 7-P connector from the under-dash fuse/relay box.
4. Disconnect the 8-P connector (with A/T) from the main wire harness.
5. Remove the steering column covers.

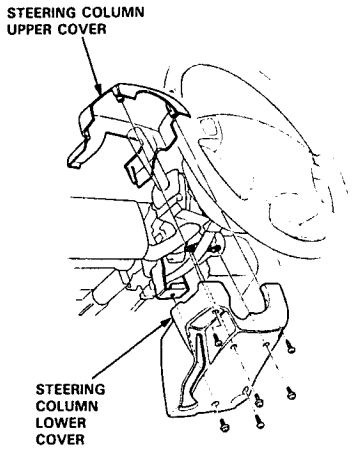

6. Remove the instrument panel.

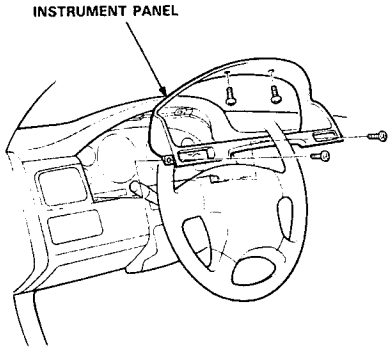

(cont'd)

Ignition Switch

Steering Lock Replacement (cont'd)

7. Center punch each of the two shear bolts and drill their heads off with a 5 mm (3/16 in.) drill bit.

   CAUTION: Do not damage the switch body when removing the shear bolts.

8. Remove the shear bolts from the switch body.

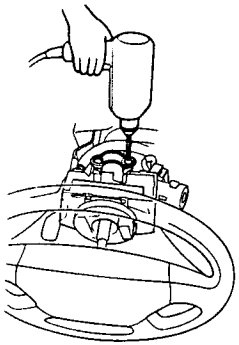

9. Install the new ignition switch without the key inserted.

10. Loosely tighten the new shear bolts.

11. Insert the ignition key and check for proper operation of the steering wheel lock and that the ignition key turns freely.

12. Tighten the shear bolts until the hex heads twist off.

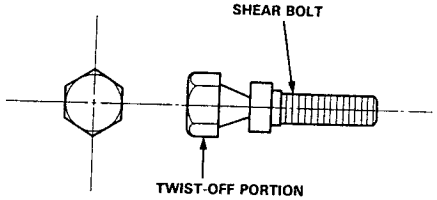

Starting System

Component Location Index

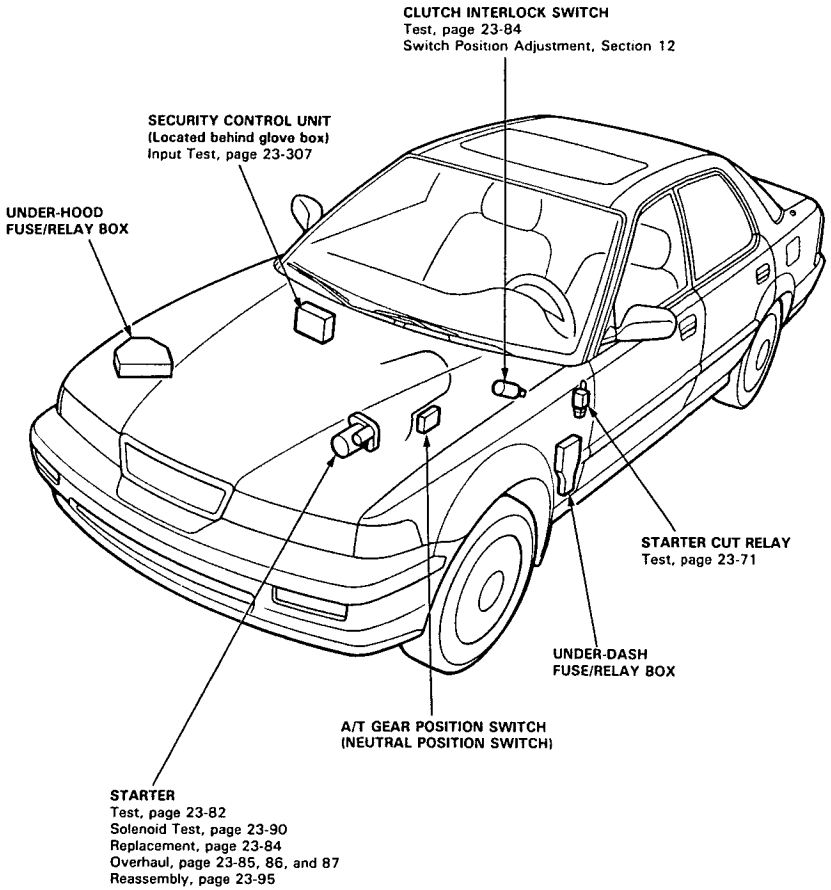

Starting System

Description

Planetary Gear Reduction Type:

One of three different gear reduction type starters may have originally been installed. In two of them, the reduction is done with a planetary gear mechanism.

The mechanism has an internal sun gear, three planetary gears, and an armature shaft. When the armature shaft rotates 4.38 turns, the pinion gear rotates one turn in the same direction and the output torque becomes 4.38 times greater than the motor torque.

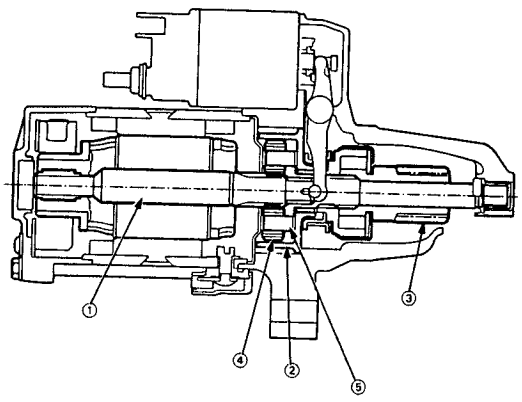

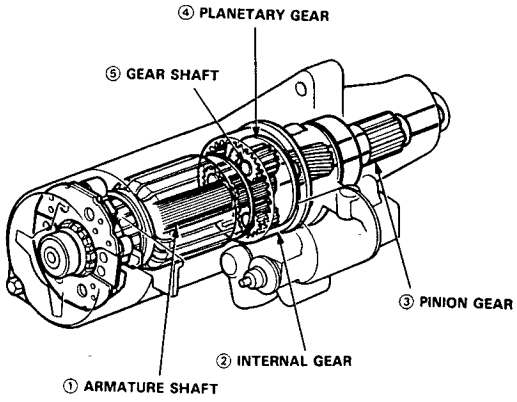

Starter Interlock System (M/T):
The starter interlock system prevents the engine from starting unless the clutch pedal is fully depressed.

The clutch interlock switch turns on at the position where the clutch disengages: 0.59-0.79 in (15-20 mm) from the fully depressed position.

NOTE: Full stroke of clutch pedal is 5.51-5.59 in (140-150 mm) from the fully released position.

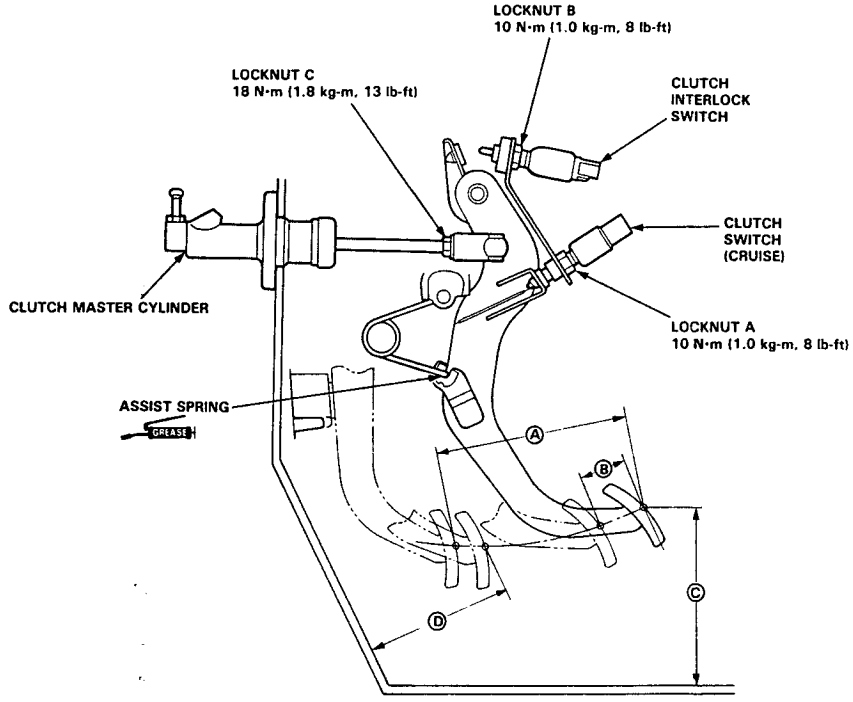

Ⓐ (FULL STROKE): 5.51–5.91 in (140–150 mm)
Ⓑ TOTAL PEDAL FREE PLAY: 0.59–0.79 in (15–20 mm) include the pedal play 0.04–0.28 in (1.0–7.0 mm)
Ⓒ (PEDAL HEIGHT): 8.17 in (207.5 mm) to the floor panel.
Ⓓ (PEDAL DISENGAGEMENT HEIGHT): 4.58 in (116.4 mm) minimum to the floor panel.

Starting System

Circuit Diagram (With Security System)

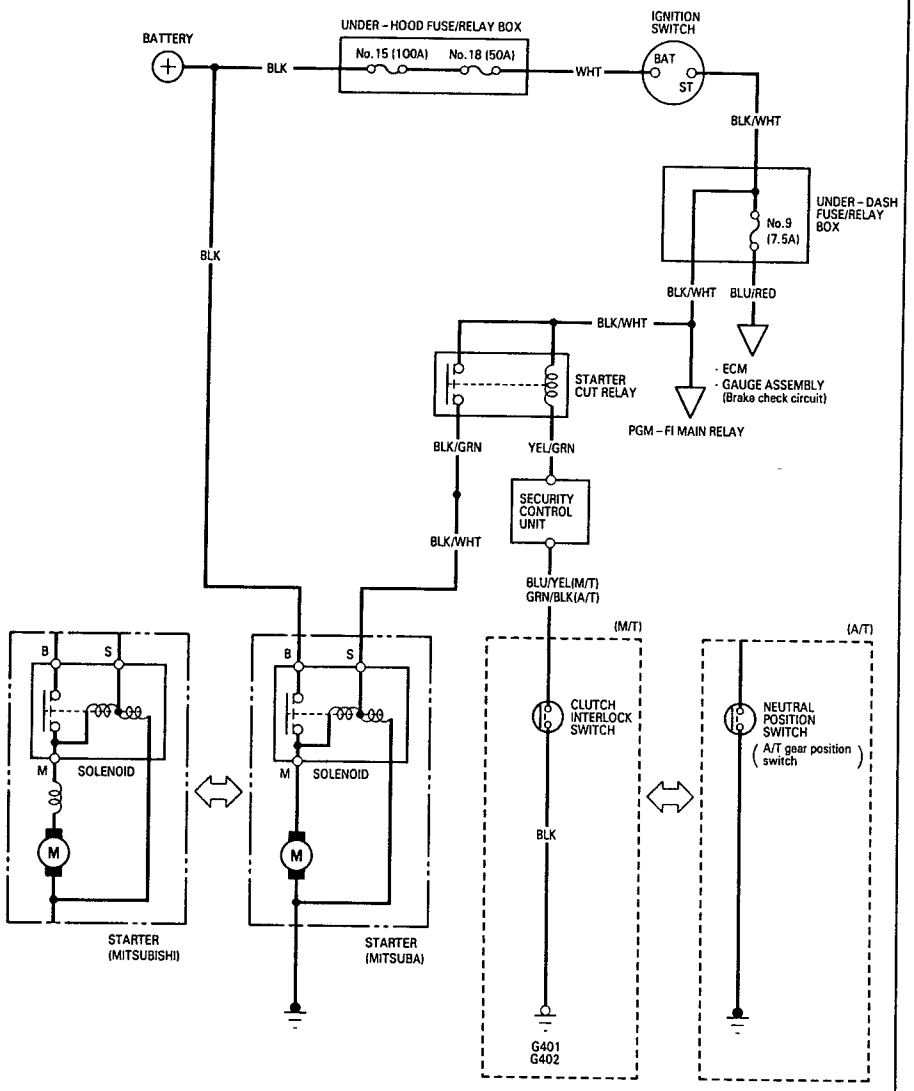

Circuit Diagram(Without Security System)

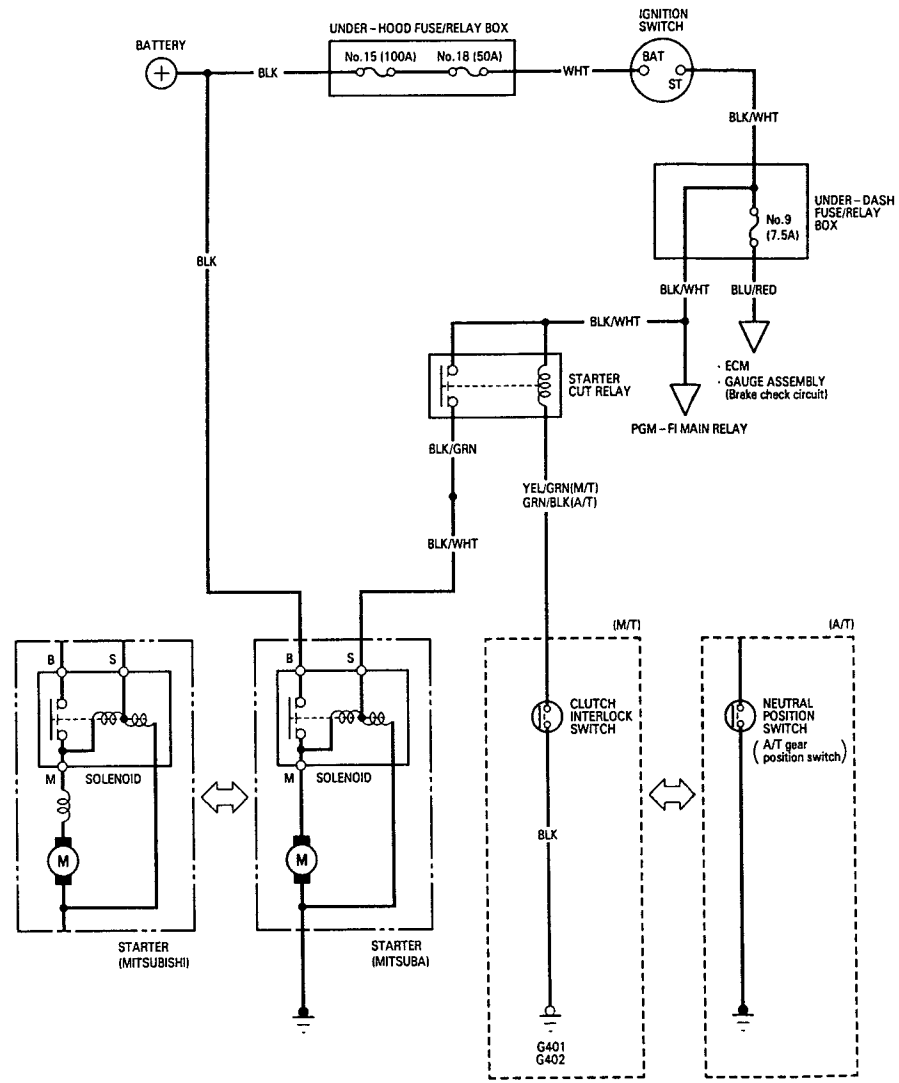

Starting System

Starter Test

NOTE: The air temperature must be between 59 and 100 °F (15 and 38 °C) before testing.

Recommended Procedure:

- Use a starter system tester.
- Connect and operate the equipment in accordance with the manufacturer's instructions.
- Test and troubleshoot as described.

Alternate Procedure:

- Use the following equipment:
  - Ammeter, 0-400 A
  - Voltmeter, 0-20 V (accurate within 0.1 volt)
  - Tachometer, 0-1200 rpm
- Hook up voltmeter and ammeter as shown.

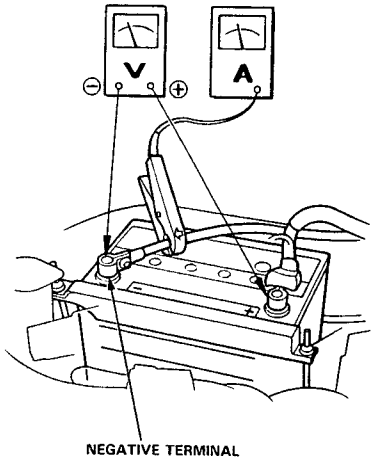

NOTE: After this test, or any subsequent repair, reset the ECM to clear any codes (see section 11).

1. Disconnect the 4-P connector from the ignition coil.

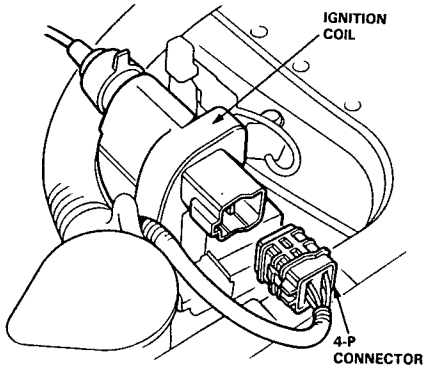

2. Check the starter engagement:
   Press the clutch pedal all the way in (M/T), and turn the ignition switch to "Start". The starter should crank the engine.

   NOTE: On cars equipped with manual transmission, the engine will not crank unless the clutch pedal is fully depressed.

   - If the starter does not crank the engine, check the battery, battery positive cable, ground, and the wire connections for looseness and corrosion.
   - Test again.
     If the starter still does not crank the engine, bypass the ignition switch circuit as follows (make sure the transmission is in neutral):
     Unplug the connector (BLK/WHT wire and solenoid terminal wire) from the starter. Connect a jumper wire from the battery positive (+) terminal to the solenoid terminal. The starter should crank the engine.

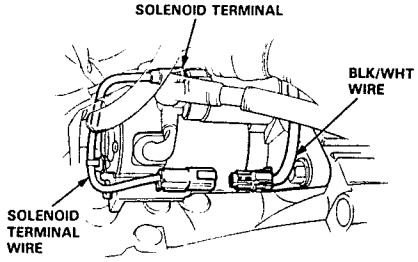

   - If the starter still does not crank the engine, remove the starter and diagnose its internal problems.
   - If the starter cranks the engine, check for an open in the BLK/WHT wire circuit between the starter and ignition switch, and connectors.
     Check the ignition switch.
     On cars with automatic transmission, check the A/T gear position switch (neutral position switch) and connector.
     On cars with manual transmission, check the starter cut relay, clutch interlock switch, and connectors.

   NOTE: Check the No. 18 (50 A) fuse in the underhood fuse/relay box and the starter cut relay, and inspect the security alarm system.

3. Check for wear or damage:
   The starter should crank the engine smoothly and steadily.

   If the starter engages, but cranks the engine erratically, remove the starter motor. Inspect the starter, drive gear and flywheel ring gear for damage.
   Check the drive gear overrunning clutch for binding or slipping when the armature is rotated with the drive gear held. Replace the gears if damaged.

4. Check cranking voltage and current draw:
   Voltage should be no less than 8.0 volts.
   Current should be no more than 350 amperes for 1.6 KW Mitsuba, 400 amperes for 2.0 KW Mitsuba, and 2.0 KW Mitsubishi.

   If voltage is too low, or current draw too high, check for:

   - Fully charged battery.
   - Open circuit in starter armature commutator segments.
   - Starter armature dragging.
   - Shorted armature winding.
   - Excessive drag in engine.

5. Check cranking rpm:
   Engine speed during cranking should be above 100 rpm.

   If speed is too low, check for:

   - Loose battery or starter terminals.
   - Excessively worn starter brushes.
   - Open circuit in commutator segments.
   - Dirty or damaged helical spline or drive gear.
   - Defective drive gear overrunning clutch.

6. Check the starter disengagement:
   Press the clutch pedal all the way in (M/T), turn the ignition switch to "III" and release to "II". The starter drive gear should disengage from the flywheel ring gear.

   If the drive gear hangs up on the flywheel ring gear, check for:

- Solenoid plunger and switch malfunction.
- Dirty drive gear assembly or damaged overrunning clutch.

Clutch Interlock Switch Test

1. Remove the dashboard lower cover and knee bolster, then disconnect the 2-P connector from the clutch interlock switch.

2. Check for continuity between the terminals according to the table.

Terminal / Clutch Pedal	A	B
RELEASED		
PUSHED	○	○

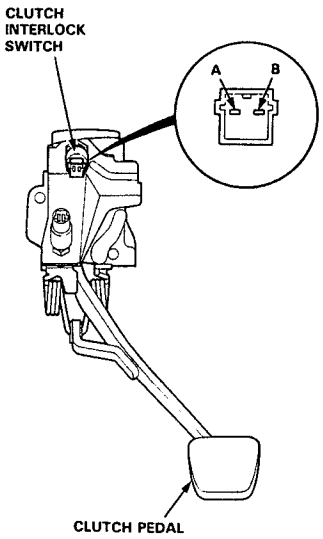

3. If necessary, replace the switch or adjust the switch position (see section 12).

Starter Replacement

NOTE: The radio may have a coded theft protection circuit. Be sure to get the customer's code number before
- Disconnecting the battery.
- Removing the No.39 (10 A) fuse in the under-hood fuse/relay box.
- Removing the radio.

After service, reconnect power to the radio and turn it on. When the word "CODE" is displayed, enter the customer's 5-digit code to restore radio operation.

1. Disconnect the battery negative cable then disconnect the positive cable.

2. Remove the rear intake manifold bracket.

3. Disconnect the starter cable from the B terminal on the solenoid, then the BLK/WHT wire from the S terminal wire.

4. Remove the two bolts holding the starter, then remove the starter.

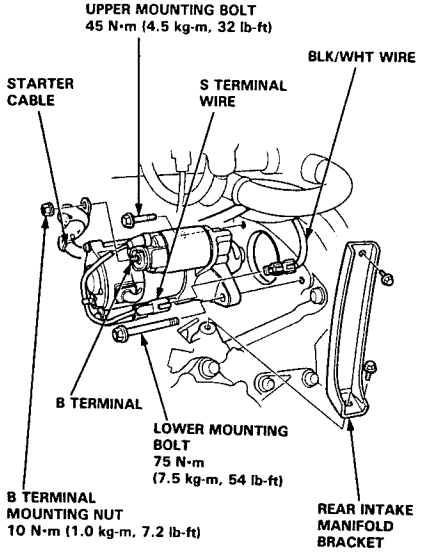

Starter Overhaul (Gear Reduction 1.6kw Mitsuba)

CAUTION: Disconnect the battery ground cables before removing the starter.

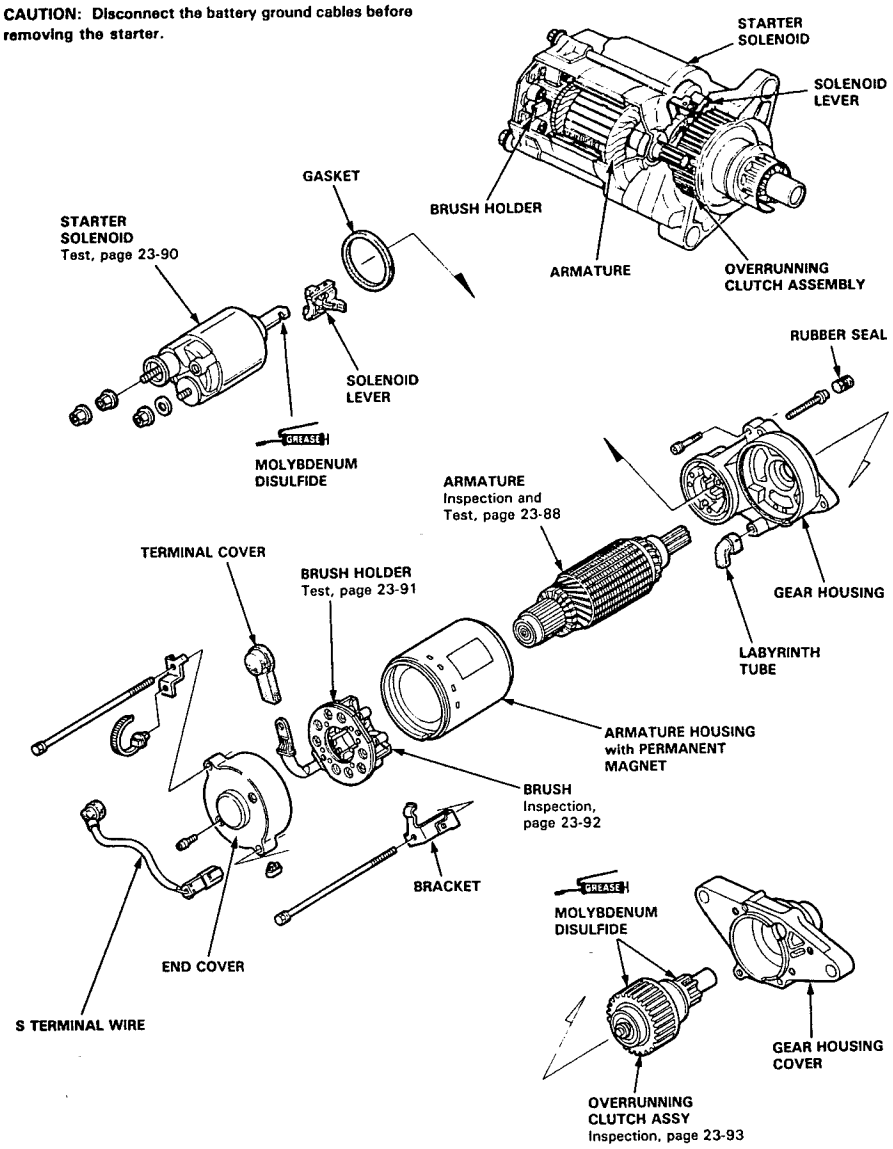

Starter Overhaul (Planetary Gear Reduction 2.0 kw Mitsuba)

CAUTION: Disconnect the battery ground cables before removing the starter.

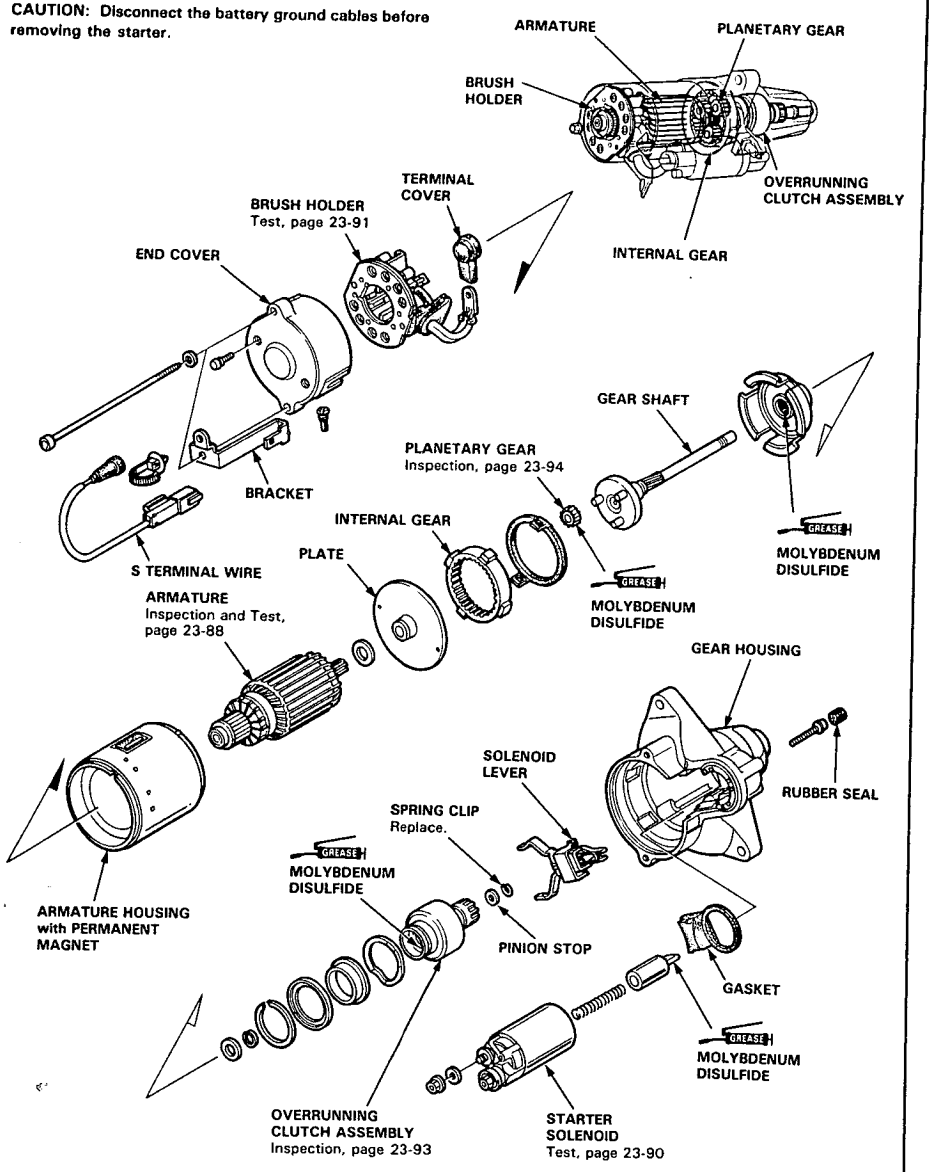

Starter Overhaul (Planetary Gear Reduction 2.0 kw Mitsubishi)

CAUTION: Disconnect the battery ground cables before removing the starter.

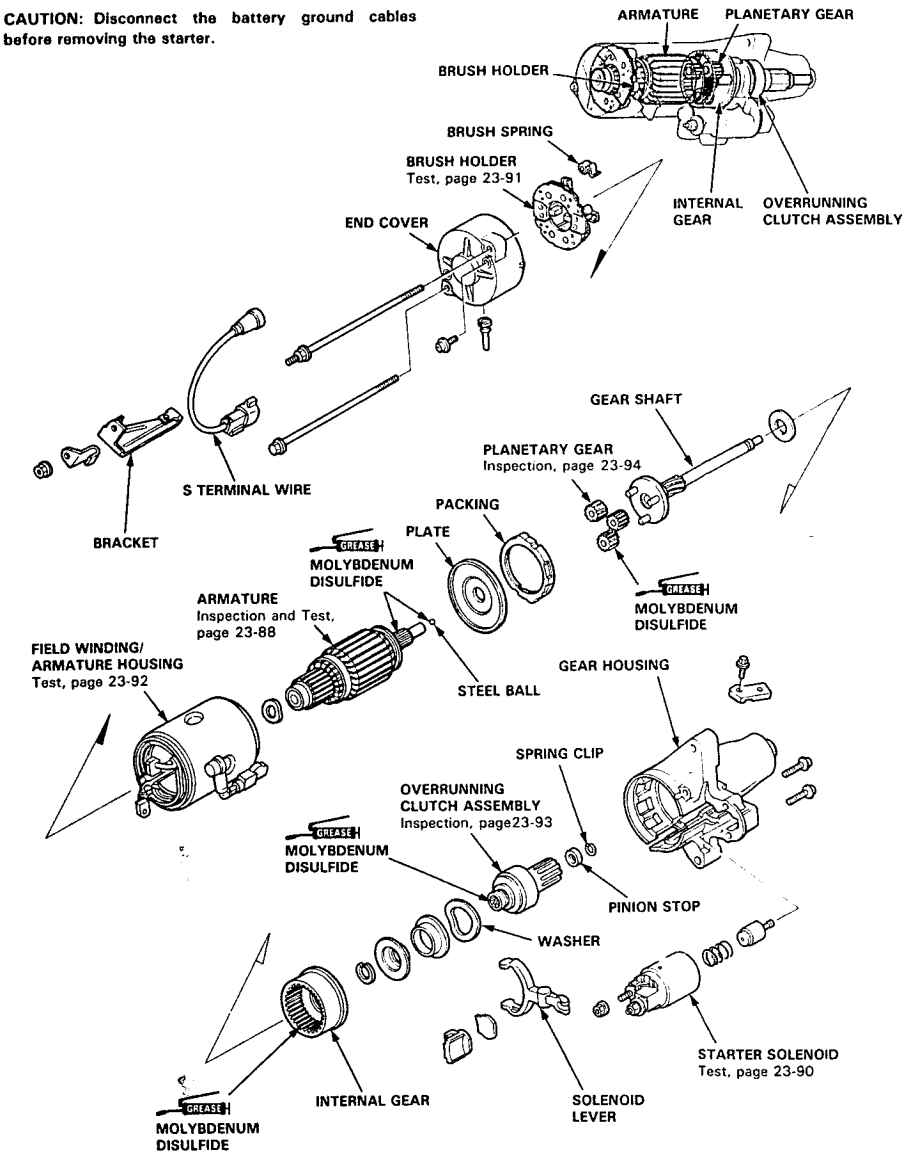

Armature Inspection and Test

1. Inspect the armature for wear or damage due to contact with the field coil magnets.

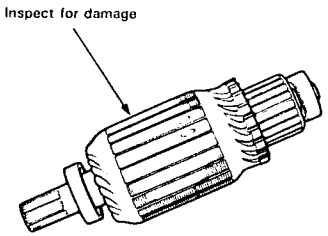

2. A dirty or burnt commutator surface may be resurfaced with emery cloth or a lathe within the following specifications.

Commutator Diameter

	Standard (NEW)	Service Limit
Mitsubishi (2.0 KW)	31.9–32.1 mm (1.256–1.263 in)	31.5 mm (1.24 in)
Mitsuba (2.0 KW)	32.0–32.1 (1.259–1.263 in)	31.5 mm (1.24 in)
Mituba (1.6 KW)	28.0–28.1 mm (1.102–1.106 in)	27.5 mm (1.083 in)

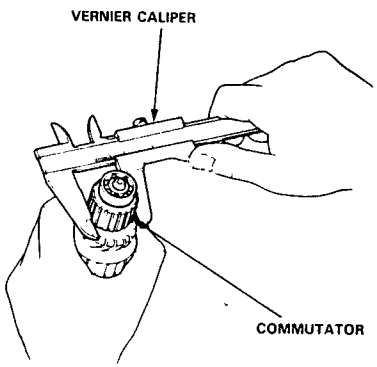

Commutator Runout

	Standard (NEW)	Service Limit
Mitsubishi (2.0 KW)	0.05 mm (0.002 in)	0.1 mm (0.004 in)
Mitsuba (2.0 KW)	0.02 mm (0.0008 in)	0.05 mm (0.002 in)
Mituba (1.6 KW)	0.02 mm (0.0008 in)	0.05 mm (0.002 in)

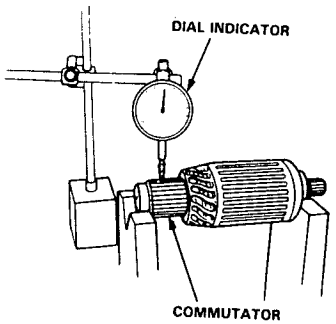

3. If the commutator runout and diameter are within limits, check the commutator for damage or for carbon dust or brass chips between the segments.

4. If the surface is dirty, recondition it with a #500 or #600 sandpaper.

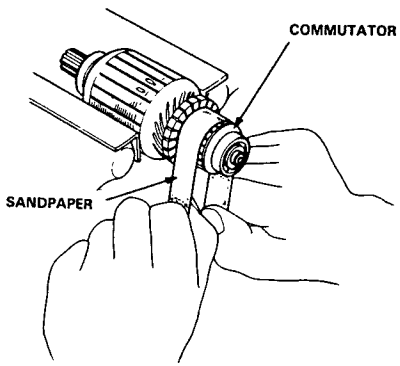

5. Check for mica depth. If necessary, undercut mica with a hacksaw blade to achieve proper depth.

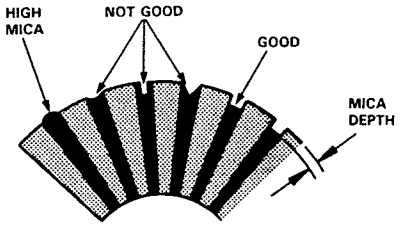

Commutator Mica Depth

	Standard (NEW)	Service Limit
Mitsubishi (2.0 KW)	0.5-0.8 mm (0.02-0.03 in)	0.02 mm (0.008 in)
Mitsuba (2.0 KW)	0.4-0.5 mm (0.016-0.02 in)	0.15 mm (0.006 in)
Mitsuba (1.6 KW)	0.4-0.5 mm (0.016-0.02 in)	0.15 mm (0.006 in)

6. Check for continuity between each segments of the commutator. If an open circuit exists between any segments, replace the armature.

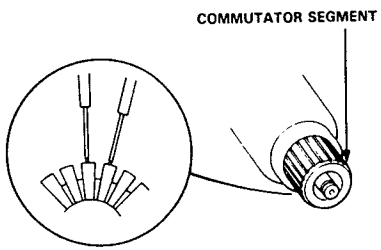

7. Place the armature on an armature tester. Hold a hacksaw blade on the armature core.

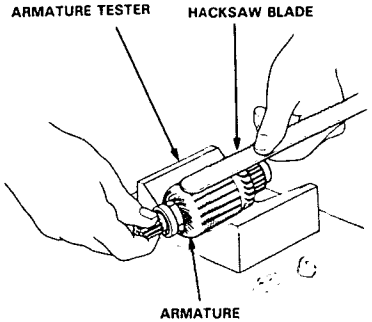

If the blade is attracted to the core or vibrates while the core is turned, the armature is shorted. Replace the armature.

8. Check with an ohmmeter that no continuity exists between the commutator and armature coil core, and between the commutator and armature shaft. If continuity exists, replace the armature.

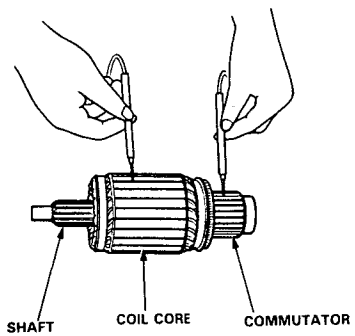

Starter Solenoid Test

1. Remove the starter solenoid from the gear housing.

Mitsuba type:

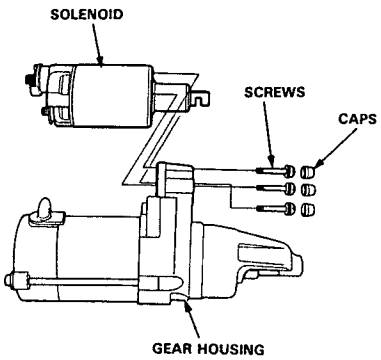

Mitsubishi type:

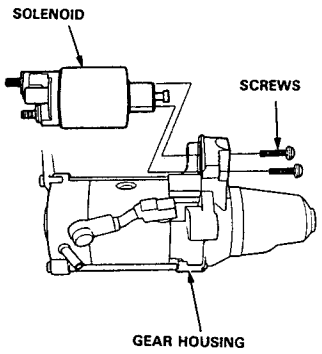

2. Check for continuity between the terminals in each solenoid plunger position according to the table.

Position \ Terminal	B	M	S	Ground
RELEASED		○	○	○
PUSHED	○	○	○	○

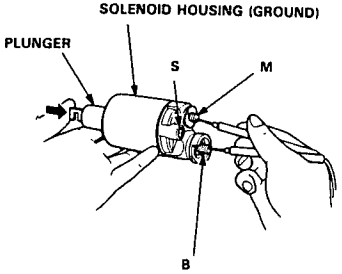

NOTE: The illustration shows Mitsuba type.

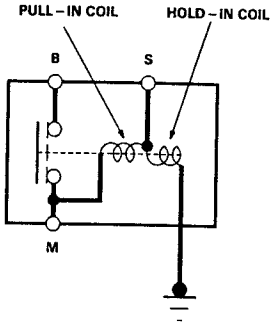

Starter Brush Holder Test

1. Check that there is no continuity between the ⊕ and ⊖ brush holders. If continuity exists, replace the brush holder assembly.

Mitsuba:

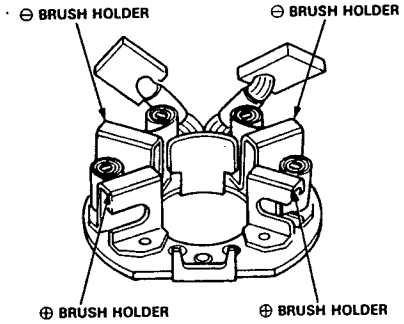

Mitsubishi:

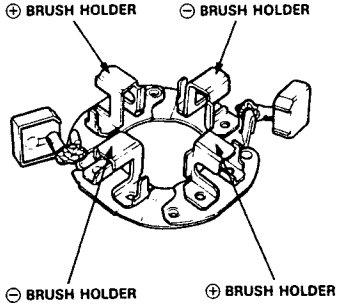

2. Insert the brush into the brush holder, and bring the brush into contact with the commutator, then attach a spring scale to the spring. Measure the spring tension at the moment the spring lifts off the brush.

	Spring Tension
Mitsubishi (2.0 KW)	29.7-36.3 N (2.97-3.63 Kg, 6.55-8.00 lbs)
Mitsuba (2.0 KW)	17-19 N (1.70-1.90 Kg, 3.75-4.19 lbs)
Mitsuba (1.6 KW)	16-18 N (1.60-1.80 Kg, 3.57-3.97 lbs)

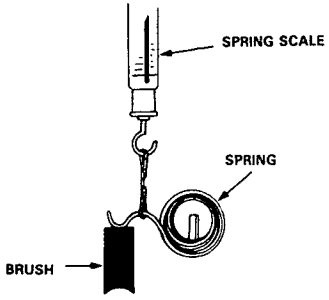

Starter Brush Inspection

Measure the brush length. If it is not within the service limit, replace the armature housing and brush holder assembly.

Brush Length

	Standard (New)	Service Limit
Mitsubishi (2.0 KW)	18.0 mm (0.71 in)	11.0 mm (0.43 in)
Mitsuba (2.0 KW)	16.8-17.2 mm (0.66-0.68 in)	11.0 mm (0.43 in)
Mitsuba (1.6 KW)	15.8-16.2 mm (0.62-0.64 in)	11.0 mm (0.43 in)

Mitsubishi:

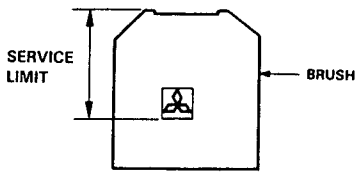

Mitsuba:

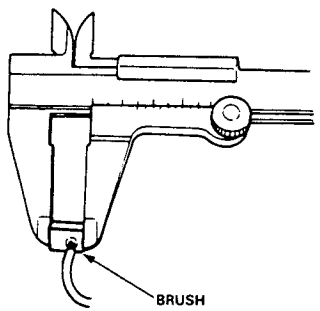

NOTE: To seat new brushes after installing them in their holders, slip a strip of #500 or #600 sandpaper, with the grit side up, over the commutator and smoothly rotate the armature. The contact surface of the brushes will be sanded to the same contour as the commutator.

Starter Field Winding Test (Mitsubishi)

1. Check for continuity between the brushes. If there's no continuity, replace the armature housing.
2. Check for continuity between each brush and the armature housing (ground). If continuity exists, replace the armature housing.

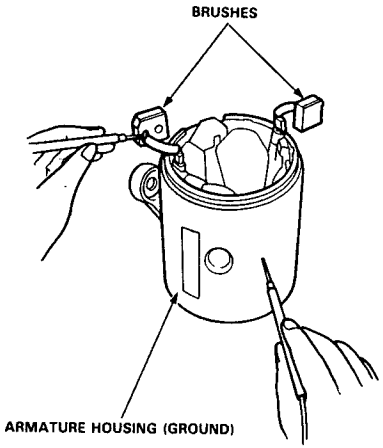

Overrunning Clutch Inspection

1. Slide the overrunning clutch along the shaft. Does it move freely? If not, replace it.
2. Rotate the overrunning clutch both ways. Does it lock in one direction and rotate smoothly in reverse? If it does not lock in either direction or it locks in both directions, replace it.

Mitsubishi (2.0 KW):

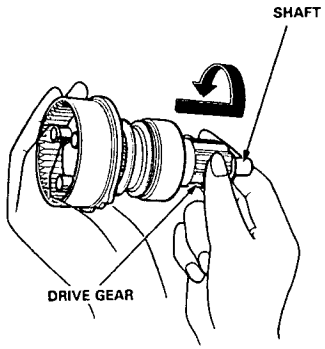

Mitsuba (2.0 KW):

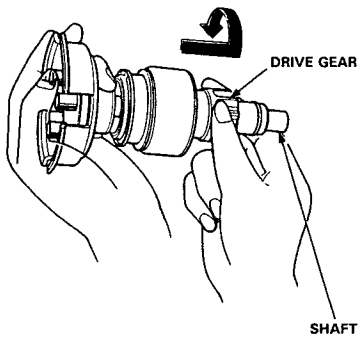

Mitsuba (1.6 KW):

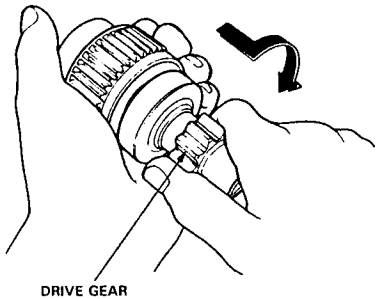

3. If the starter drive gear is worn or damaged, replace the overrunning clutch assembly; the gear is not available separately.
4. Check the condition of the flywheel or torque converter ring gear if the starter drive gear teeth are damaged.

Planetary Gear Inspection

1. Check the planetary gear for wear and damage.
2. If the planetary gear is worn or damaged, check the condition of the armature shaft gear and internal gear.

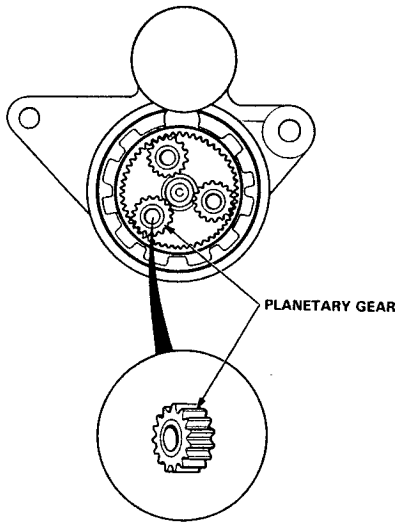

Overrunning Clutch Removal

1. Put the end of a pipe with an inner diameter of 13 mm (0.51 in) against the stop and strike the pipe to dismount the stop from the ring.

A: 13 mm (0.51 in)

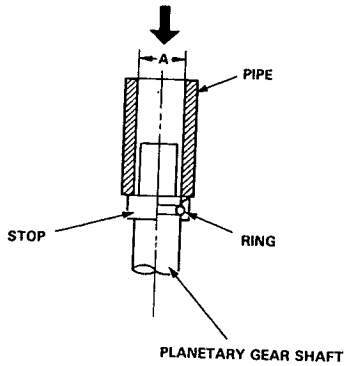

2. Remove the ring, then pull the stop and overrunning clutch off the shaft.

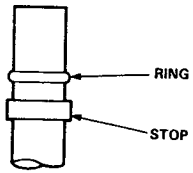

Starter Reassembly

Reassemble the starter in the reverse order of disassembly.

1. Pry back each brush spring with a screwdriver, then position the brush about halfway out of its holder, and release the spring to hold it there.

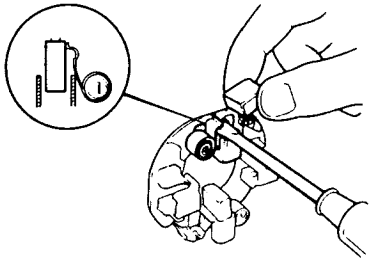

2. Install the armature in the housing. Next pry back each brush spring again and push the brush down until it seats against the commutator, then release the spring against the end of the brush.

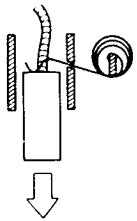

3. Install the end cover on the brush holder.

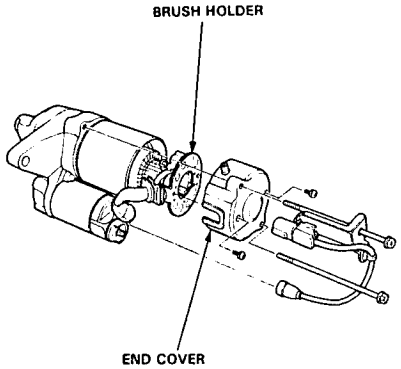

Performance Test

NOTE: Before starting the following checks, disconnect the wire from terminal M,and make a connection as described below using as heavy a wire as possible (preferably equivalent to the wire used for the car).

Pull-in Coil Test:

Connect the battery as shown. If the pinion protrudes, it is working properly.

NOTE: Do not leave the battery connected for more than 10 seconds.

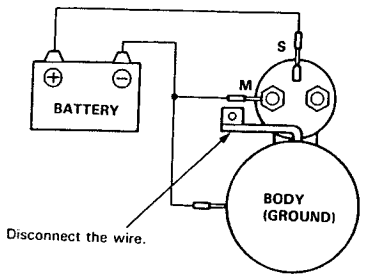

Hold-in Coil Test:

Disconnect the battery from the M terminal. If the pinion does not snap back, the hold-in coil is working properly.

NOTE: Do not leave the battery connected for more than 10 seconds.

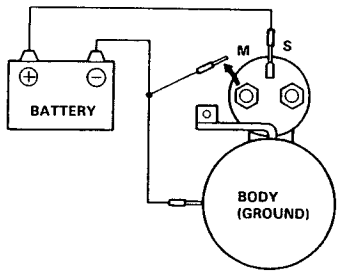

Retracting Test:

Disconnect the battery from the body. If the pinion retracts immediately, it is working properly.

NOTE: Do not leave the battery connected for more than 10 seconds.

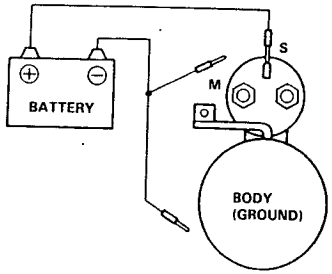

Pinion Gap Check:

1. Disconnect the wire from terminal M.
2. When the battery is connected between terminals S and M, the pinion protrudes and stops. Keep the pinion in this position and measure the gap between the pinion and the pinion stop.

   NOTE: Do not leave the battery connected for more than 10 seconds.

Specification:
Pinion Gap: 0.5–2 mm (0.02–0.08 in)

3. If the pinion gap is out of the specified range, adjust the gap by increasing or decreasing the number of washers between the solenoid and the gear housing. When the number of washers is increased, the gap becomes smaller.

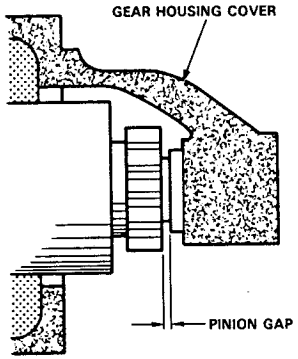

Starter No-load Test:

1. Clamp the starter firmly in a vise.
2. Connect the starter to the battery as shown in the diagram below and confirm that the motor starts and keeps rotating.
3. If the electric current and motor speed meet the specifications when the battery voltage is at 11 V, the starter is working properly.

Specifications:
Mitsubishi
(2.0 KW): 140 A or less (Electric current),
3,800 rpm or more (Motor speed)

Mitsuba
(2.0 KW): 90 A or less (Electric current),
2,200 rpm or more (Motor speed)

Mitsuba
(1.6 KW): 80 A or less (Electric current),
2,600 rpm or more (Motor speed)

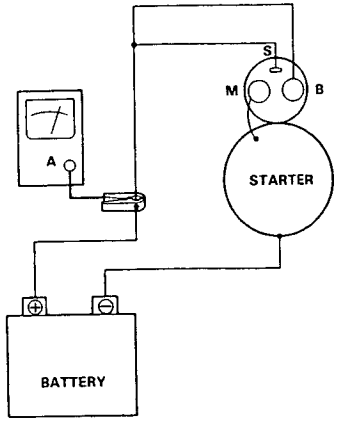

Ignition System

Component Location Index

IGNITION TIMING CONTROL SYSTEM

- Troubleshooting, section 11
- Inspection and setting page 23-100

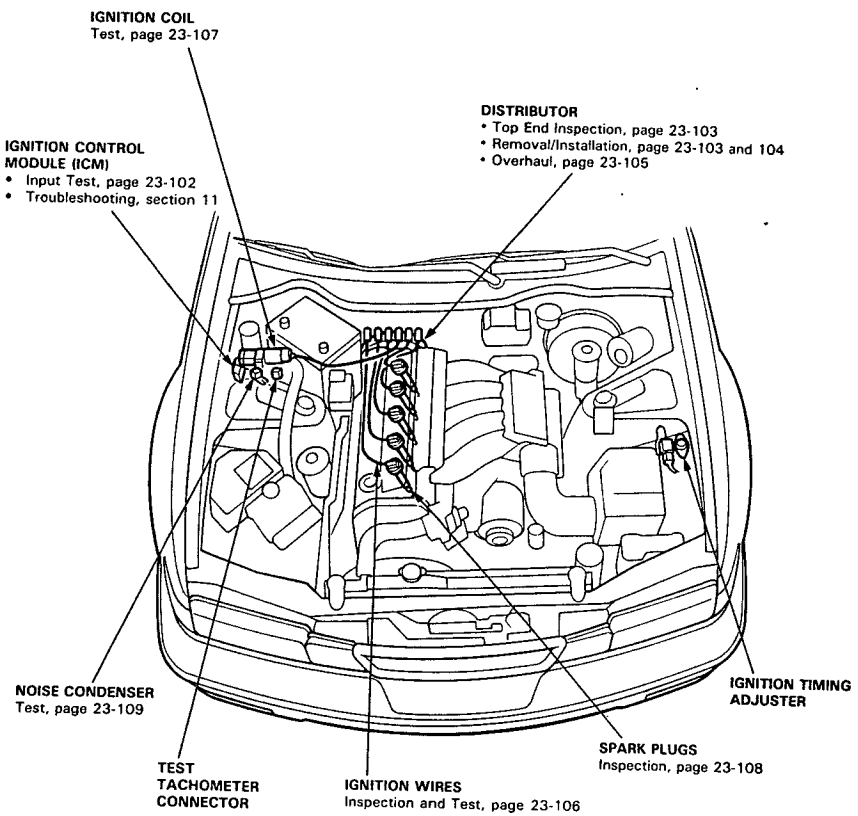

Circuit Diagram

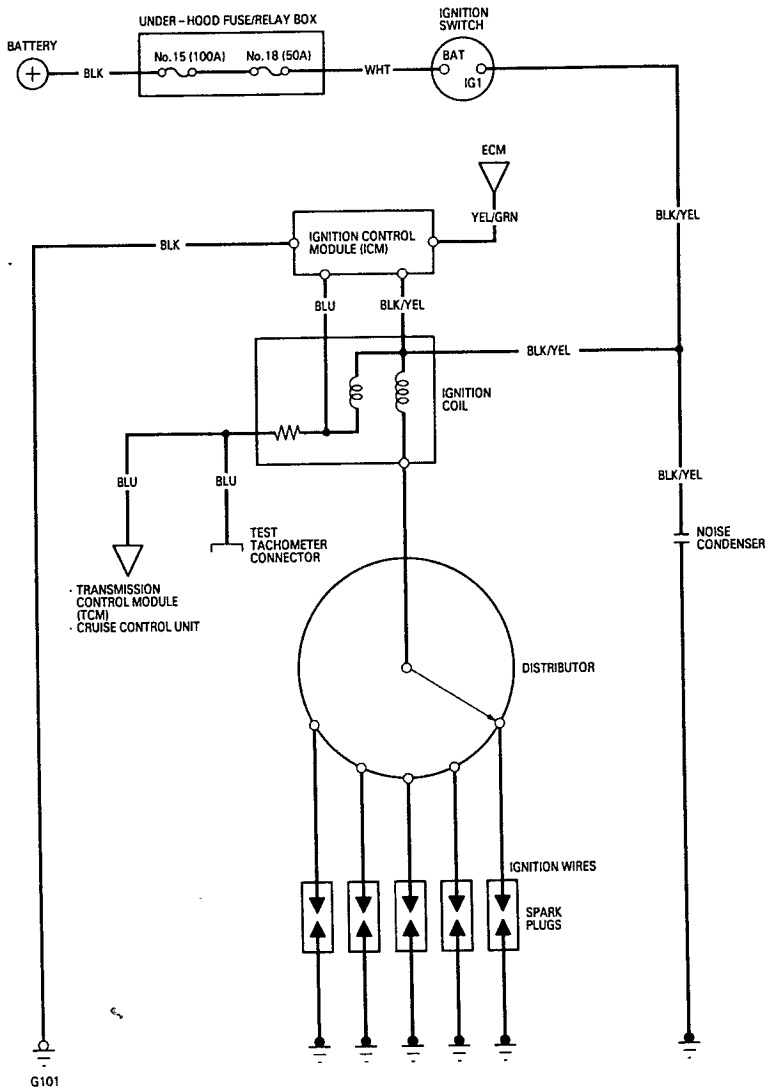

Ignition Timing Inspection and setting

CAUTION:
- **All SRS electrical wiring harnesses are covered with yellow outer insulation.**
- **Before disconnecting the SRS wire harness, install the short connector (s) on the airbag (s).**
- **Replace the entire affected SRS harness assembly if it has an open circuit or damaged wiring.**

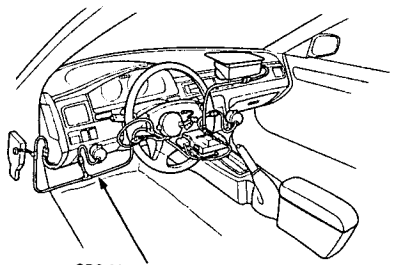

1. Start the engine and allow it to warm up (the radiator fan comes on).
2. Pull out the service check connector (BLU) located under the middle of the dash. Connect the WHT/GRN and BRN terminals with a jumper wire.

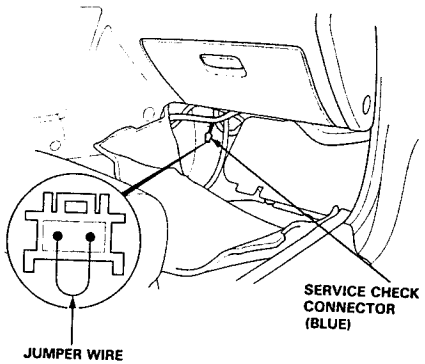

3. Check the idle speed (see page 23-101).

   NOTE: Adjust the idle speed, if necessary, by turning the idle adjusting screw (see section 11).

4. Connect a timing light to the No. 1 ignition wire; while the engine idles, point the light toward the pointer on the timing belt cover.

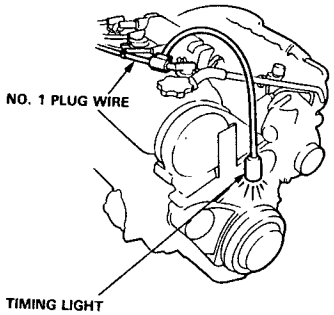

5. Inspect ignition timing at idle speed.

   Ignition Timing: 15° ± 2° BTDC (RED)

   - Manual Transmission (at 700 ± 50 rpm in neutral)
   - Automatic Transmission (at 700 ± 50 rpm in N or P)

   NOTE: All electrical systems should be turned off.

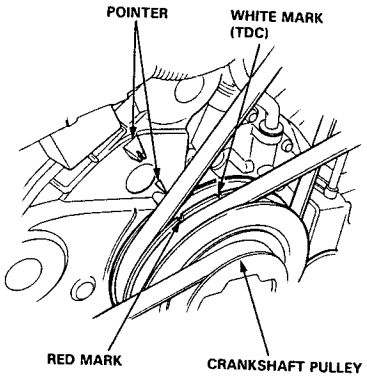

6. If it is necessary to adjust the ignition timing, remove the ignition timing adjuster.
   - Drill the two rivets off with a 5 mm (3/16 in) drill bit, then separate the cover from the adjuster.

   CAUTION: Do not damage the adjuster when removing the rivets.

7. Adjust the ignition timing by turning the adjusting screw on the ignition timing adjuster.

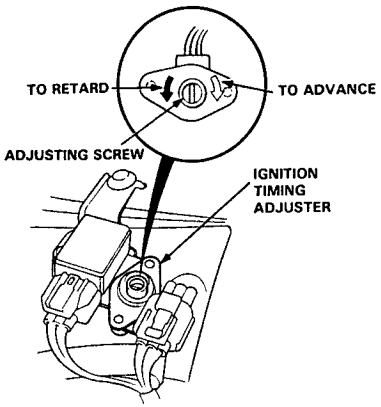

8. Remove the jumper wire from the service check connector.
9. After adjusting, reinstall the cover on the ignition timing adjuster with new rivets.

Idle Speed Inspection

1. Start the engine and allow it to warm up (the radiator fan comes on).
2. Connect a tachometer to the test tachometer connector.

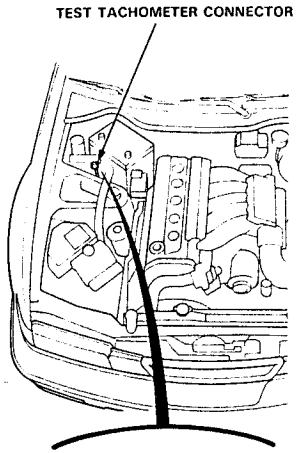

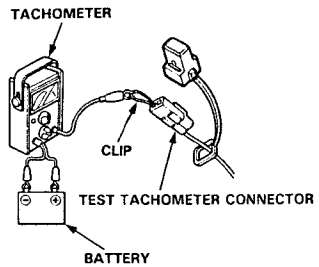

Idle speed:
M/T: 700 ± 50 rpm in neutral
A/T: 700 ± 50 rpm in N or P

NOTE: All electrical systems should be turned off.

3. Adjust the idle speed, if necessary (see section 11).

Ignition Control Module (ICM) Input Test

NOTE:
- See section 11 when the malfunction indicator lamp (MIL) blinks.
- Perform an input test on the ignition control module (ICM) after finishing the fundamental tests for the ignition system and fuel emission system.
- The tachometer should operate normally.

Disconnect the 4-P connector from the ICM. Make the following input tests at the connector terminals. If all tests prove OK, yet the system still fails to work, replace the ICM.

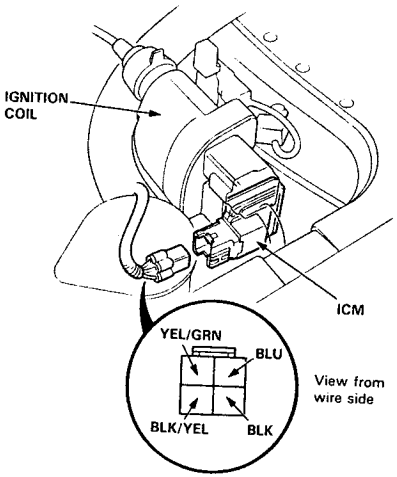

1. Check for continuity between the BLK wire and body ground.
   - If there is continuity, go to step 2.
   - If there is no continuity, check for:
     - An open in the BLK wire.
     - Disconnected terminals.
     - Poor ground (G101).
2. With the ignition switch ON, there should be battery voltage between the BLK/YEL wire and BLK wire.
   - If there is battery voltage, go to step 3.
   - If there is no voltage, check for:
     - An open in the BLK/YEL wire.
     - Disconnected terminals.
     - Ignition coil test (see page 23-107).
3. With the ignition switch ON, there should be battery voltage between the BLU wire and BLK wire.
   - If there is no voltage, Check for:
     - An open in the BLU wire between the ignition coil and ICM.
     - Ignition coil test (see page 23-107).

Distributor Top End Inspection

1. Check for rough or pitted rotor and cap terminals.
2. Scrape or file off the carbon deposits. Smooth the rotor terminal with an oil stone or #600 sandpaper if rough.
3. Check the distributor cap for cracks, wear, and damage. If necessary, clean or replace it.

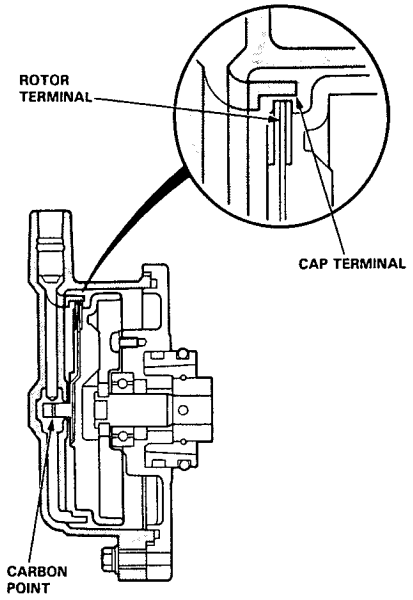

Distributor Removal

1. Disconnect the ignition wires from the distributor cap.

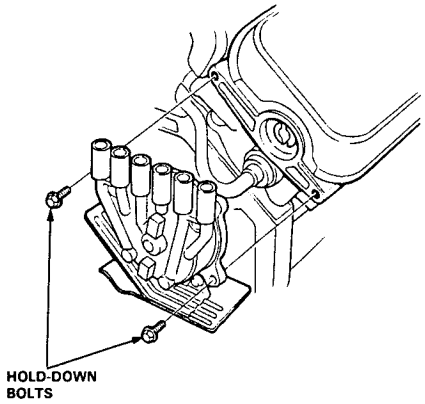

2. Remove the distributor hold-down bolts, then remove the distributor from the cylinder head.

Distributor Installation

1. Coat a new O-ring with engine oil then install it.
2. Slip the distributor into position.

   NOTE: The lugs on the end of the distributor and its mating grooves in the camshaft end are both offset to eliminate the possibility of installing the distributor 180° out of time.

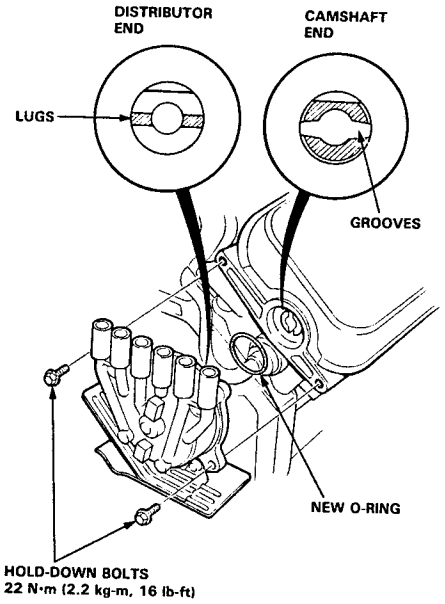

3. Install the hold-down bolts and tighten them temporarily.
4. Connect the ignition wires and ignition coil wire as shown.

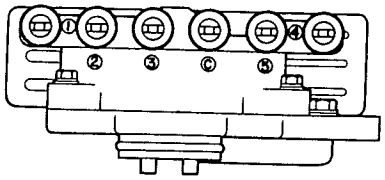

5. Set the timing with a timing light as shown on page 23-100.
6. After adjusting, tighten the hold-down bolts.

Distributor Overhaul

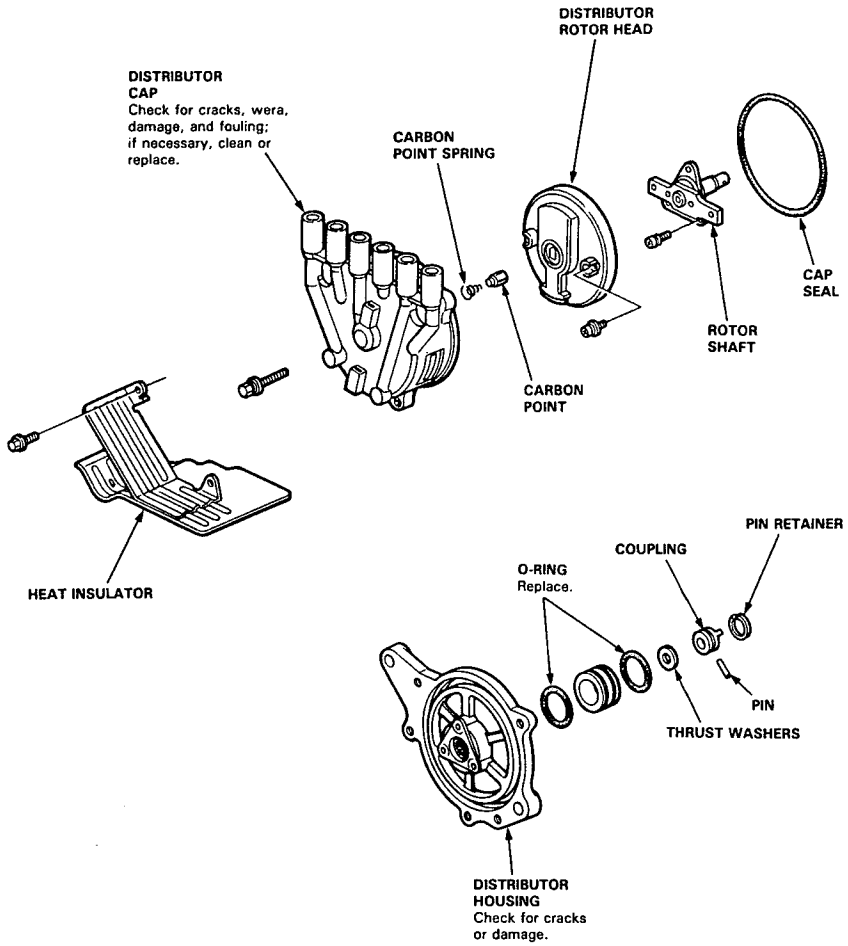

Distributor Reassembly

Reassemble the distributor shaft and housing in the reverse order of disassembly.

1. Install the rotor, then turn it so that it faces in the direction shown (toward the No. 1 cylinder).

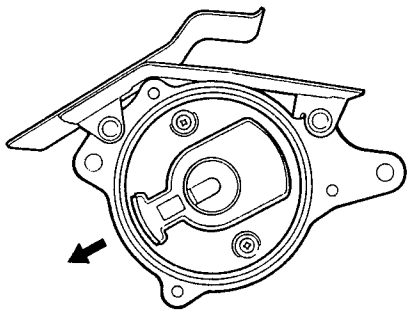

2. Slip the thrust washer and coupling onto the shaft.
3. Check that the rotor is still pointing toward the No. 1 cylinder, then align the index mark on the housing with the index mark on the coupling.

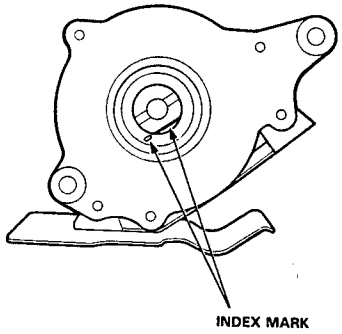

4. Drive in the pin and secure it with the pin retainer.

Ignition Wire Inspection and Test

CAUTION: Carefully remove the ignition wires by pulling on the rubber boots. Do not bend the wires; you might break them inside.

1. Check the condition of the ignition wire terminals. If any terminal is corroded, clean it, and if it is broken or distorted, replace the wire.

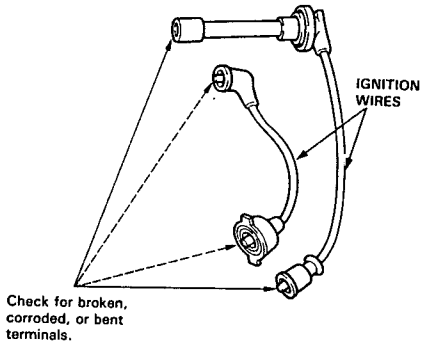

2. Connect ohmmeter probes and measure resistance.

   Ignition Wire Resistance:
   25 kΩ max. at 70 °F (20 °C)

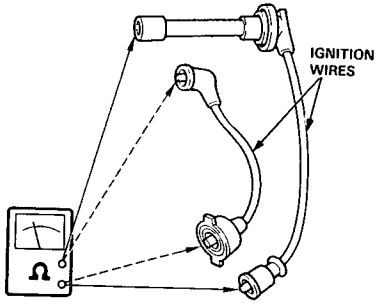

3. If resistance exceeds 25 kΩ, replace the ignition wire.

Ignition Coil Test

1. Turn the ignition switch OFF.
2. Disconnect the 4-P connector and ignition coil wire.

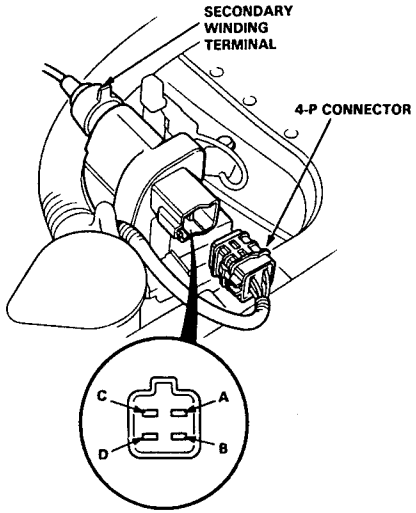

3. Using an ohmmeter, measure resistance between the terminals. Replace the coil if the resistance is not within specifications.

   NOTE: Resistance will vary with the coil temperature; specifications are at 68 °F (20 °C).

Primary Winding Resistance
(Between the A and D terminals):
0.3–0.5 ohms

Secondary Winding Resistance
(Between the A and secondary winding terminals):
10.8–16.2 kΩ

Resistance between the B and D terminals:
2.0–2.3 kΩ

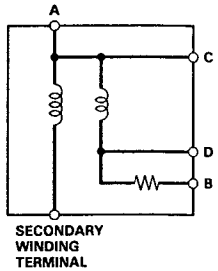

3. Check for continuity between the A and C terminals.
   - Replace the coil if there is no continuity.

Spark Plug Inspection

1. Inspect the electrodes and ceramic insulator for:

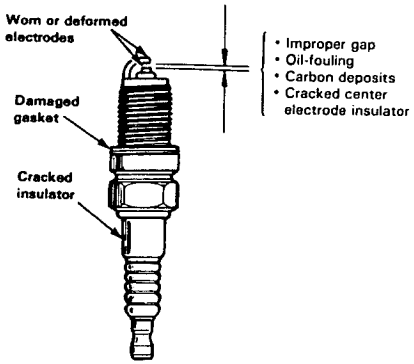

Burned or worn electrodes may be caused by:
- Advanced ignition timing
- Loose spark plug
- Plug heat range too hot
- Insufficient cooling

Fouled plug may be caused by:
- Retarded ignition timing
- Oil in combustion chamber
- Incorrect spark plug gap
- Plug heat range too cold
- Excessive idling/low speed running
- Clogged air cleaner element
- Deteriorated ignition coil or ignition wires

2. Adjust the gap with a suitable gapping tool.

   Electrode Gap: 1.1 mm (0.043 in)

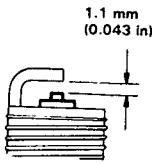

3. Replace the plug if the center electrode is rounded as shown below:

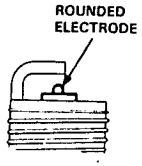

NOTE: Do not use spark plugs other than those listed below; these plugs are a new type (ISO standard).

These marks are sealed on the air cleaner cover.

Spark Plug:

BKR5E-N11 (NGK) K16PR-L11 (Nippondenso)	For all normal driving.
BKR6E-N11 (NGK) K20PR-L11 (Nippondenso)	For hot climates or continuous high speed driving.

4. Screw the plugs into the cylinder head finger-tight, then torque them to 18 Nm (1,8 kg-m, 13 lb-ft).

   NOTE: Apply a small quantity of anti-seize compound to the plug threads before installing.

Noise Condenser Capacity Test

1. Use a commercially available condenser tester. Connect the condenser tester probes and measure the condenser capacity.

   Condenser capacity: 0.47 ± 0.09 microfarads (μF)

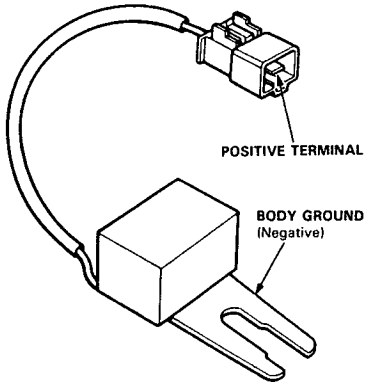

   NOTE: The noise condenser is intended to reduce ignition noise. However, condenser failure may cause the engine to stop running.

2. If not within the specifications, replace the noise condenser.

Component Location Index

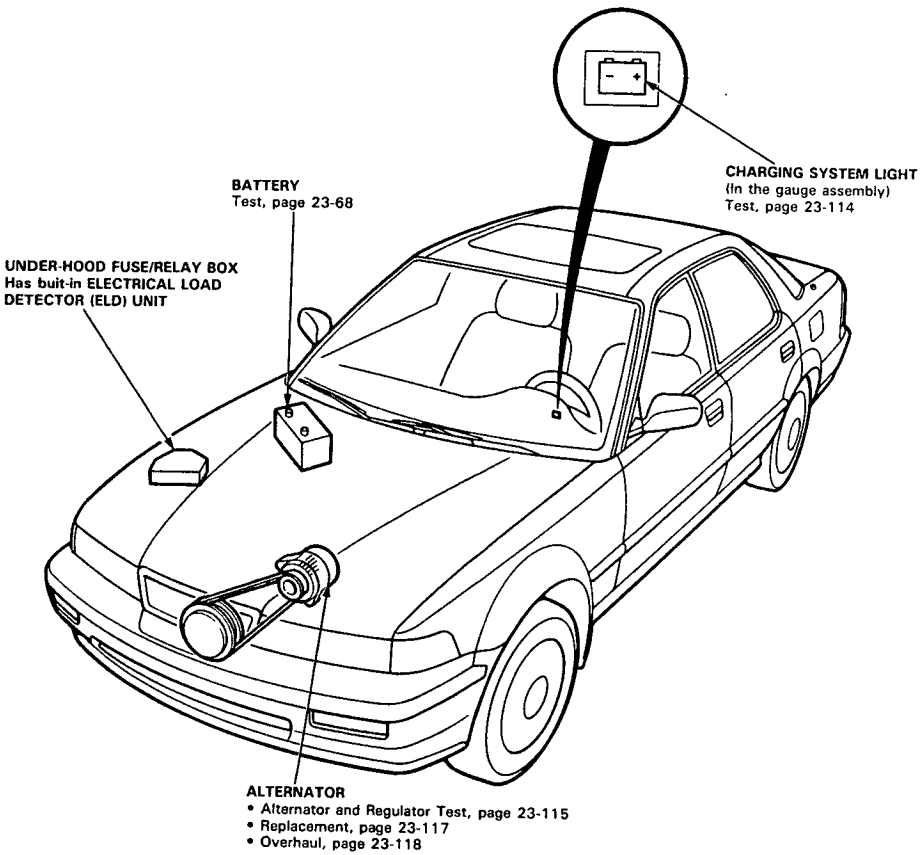

Description

To improve fuel economy, the alternator control system within the ECM changes the voltage generated at the alternator in accordance with driving conditions.

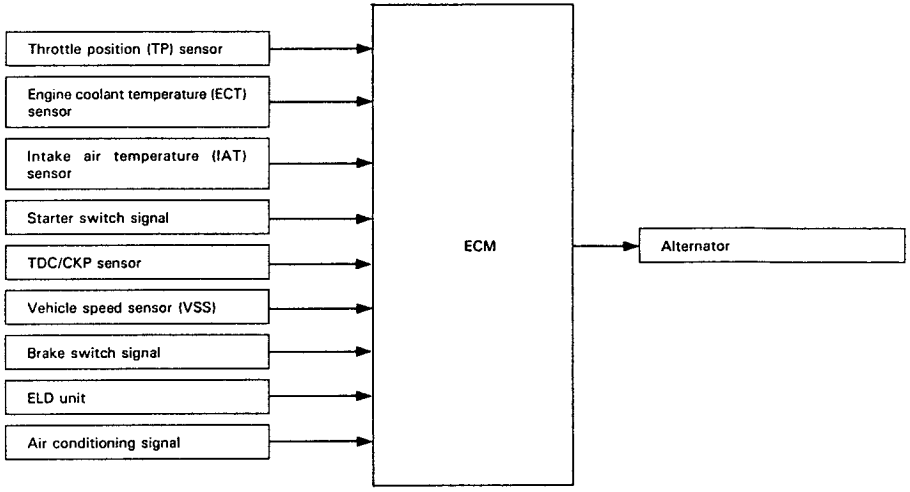

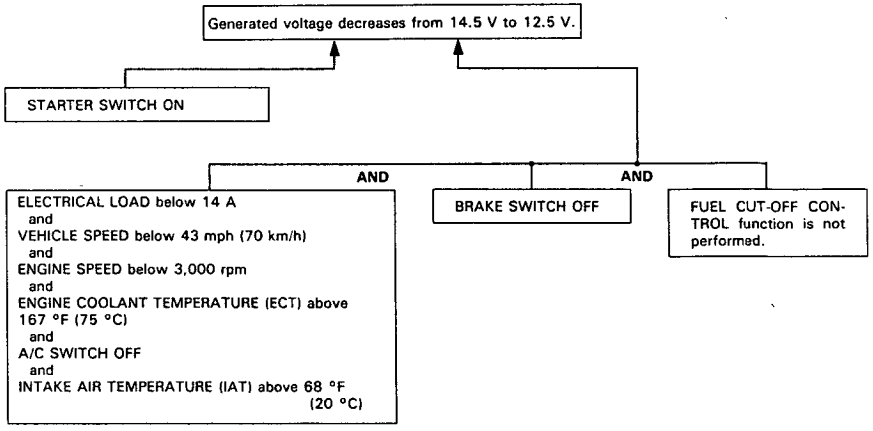

Charging System

Circuit Diagram

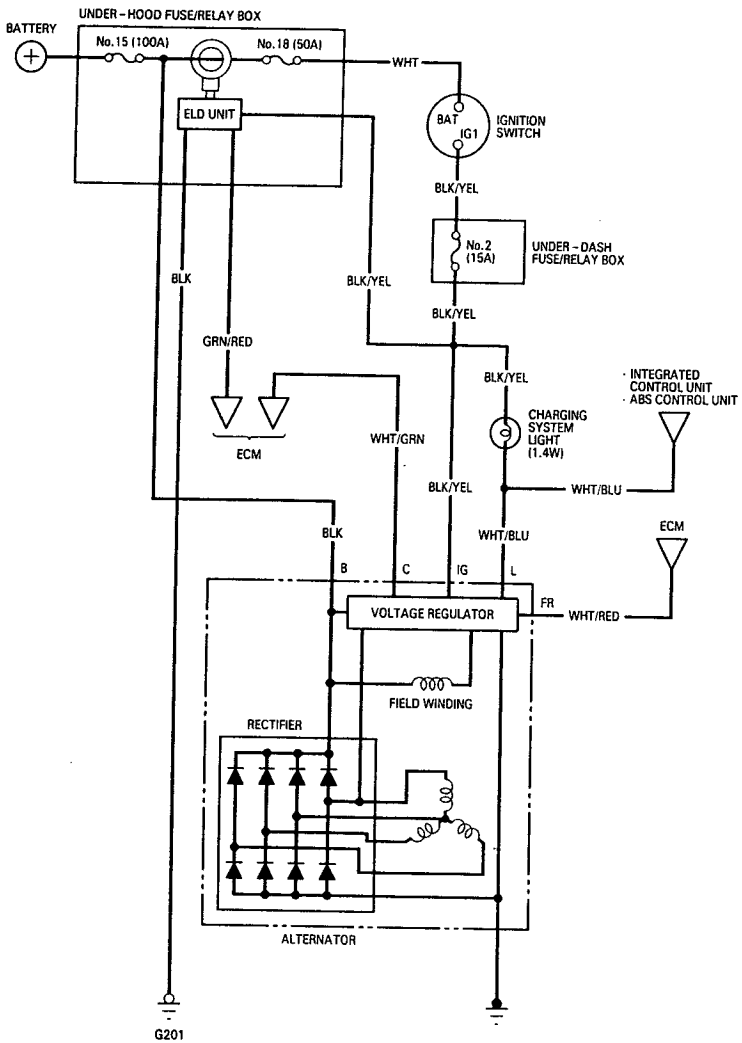

Troubleshooting

If the charging system light is on, or the battery is dead or low, perform the following tests in the order listed below:

1. Battery Test (see page 23-68)
2. Charging System Light Test
3. Alternator/Regulator Test

Charging System Light Test

Turn the ignition switch on.

Does the charging system light come on?
- NO → (To page 23-114)
- YES ↓

Start the engine.

Does the charging system light go off?
- YES → **Charging system light circuit is OK.**
- NO ↓

Turn the ignition switch off.

Disconnect the 4-P connector from the alternator.

Turn the ignition switch on.

Does the charging system light come on?
- YES → **Remove the 18-P connector from the ABS control unit and the 16-P connector from the integrated control unit. If the charging system light stays on, repair the short to ground in the WHT/BLU wire.**
- NO ↓

Perform alternator/regulator test (see page 23-115).

NOTE: After this test or related repairs, reconnect the control unit connectors, then reset the engine control module (ECM) to clear any codes.

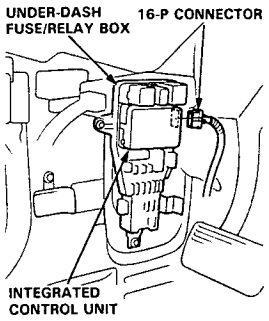

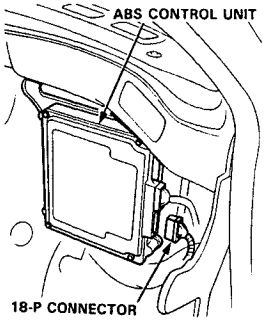

(cont'd)

Troubleshooting (cont'd)

(From page 23-113)

Turn the ignition switch off.

Check fuse No. 2 (15 A) in the under-dash fuse/relay box.

Is the fuse OK?
- NO → **Replace the fuse.**
- YES ↓

Disconnect the 4-P connector from the alternator.

Turn the ignition switch on.

Check for voltage at the IG terminal (BLK/YEL wire) of the 4-P connector.

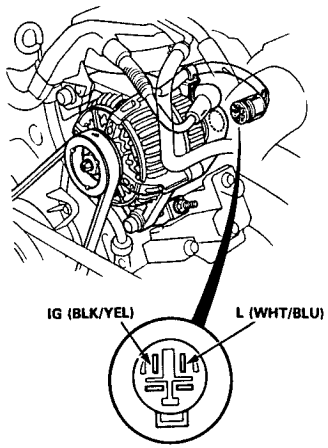

View from terminal side

Is there battery voltage?
- NO → **Repair open in the BLK/YEL wire.**
- YES ↓

Ground the WHT/BLU wire at the L terminal of the 4-P connector.

Does the charging system light come on?
- NO → **Check for a blown charging system light bulb. If the bulb is OK, repair open in the WHT/BLU wire.**
- YES ↓

Replace the voltage regulator

Alternator/Regulator Test

NOTE: Make sure the battery is sufficiently charged (see page 23-68).

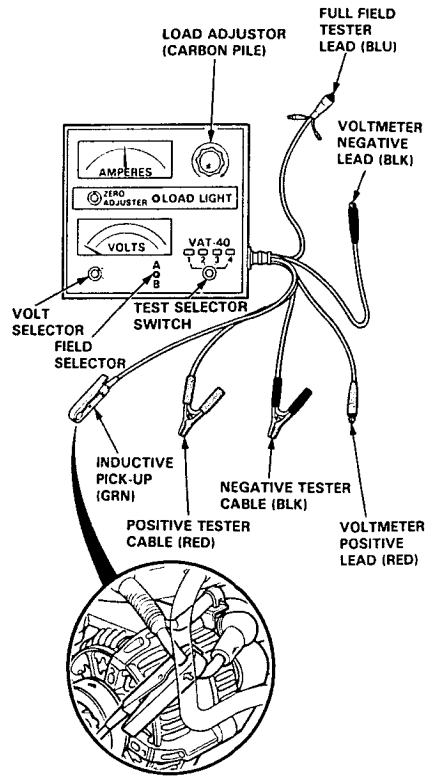

Connect the Sun VAT-40 (or equivalent test equipment) and turn the selector switch to position 1 (starting).

Start the engine and let it idle until it reaches normal operating temperature (the radiator fan comes on).

Raise the engine speed to 2000 rpm and hold it there.

Is the voltage over 15.1V?
- YES → **Replace the voltage regulator.**
- NO ↓

Release the accelerator pedal and let the engine idle.

Make sure all accessories are turned off. Turn the selector switch to position 2 (charging).

Remove the inductive pick-up and zero the ammeter.

Place the inductive pick-up over the B terminal wire of the alternator so that the arrow points away from the alternator.

Raise the engine speed to 2000 rpm and hold it there.

Is the voltage less than 13.9V?
- YES → **Test the battery (see page 23-68).**
- NO ↓

(To page 23-116)

(cont'd)

Troubleshooting (cont'd)

(From page 23-115)

Apply a load with the VAT-40 until the battery voltage drops to between 12–13.5 V.

Is the amperage 55 A or more?

YES → Charging system is OK.

NO

With the engine speed still at 2000 rpm, full-field the alternator.

NOTE: Attach a probe to the VAT-40 full field test lead and insert the probe into the full field access hole at the back of the alternator. Switch the field selector to the "A (Ground)" position momentarily and check amperage reading.

CAUTION: The voltage will rise quickly when the alternator is full-fielded. Do not allow the voltage to exceed 18 V or it may damage the electrical system.

Is the alternator output 55 A or more?

NO → Test and repair the alternator (see pages 23-118 to 23-120).

Turn the ignition switch off; then turn it on again.

YES

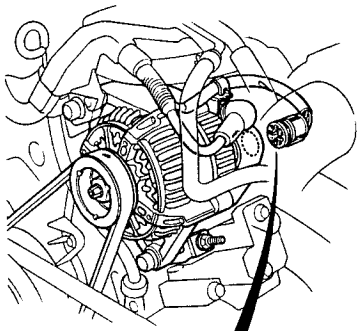

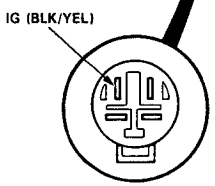

View from terminal side

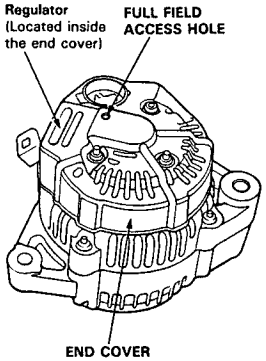

Disconnect the 4-P connector from the alternator.

Check for voltage at the IG terminal (BLK/YEL) of the 4-P connector.

Is there battery voltage ?

→ Repair open in the BLK/YEL wire.

Replace the voltage regulator.

Alternator Replacement

NOTE: The radio may have a coded theft protection circuit. Be sure to get the customer's code number before
- Disconnecting the battery.
- Removing the No.39 (10 A) fuse in the under-hood fuse/relay box.
- Removing the radio.

After service, reconnect power to the radio and turn it on. When the word "CODE" is displayed, enter the customer's 5-digit code to restore radio operation.

1. Disconnect both the negative cable and positive cable from the battery.

2. Disconnect the 4-P connector, then remove the terminal nut and the BLK wire from the B terminal.

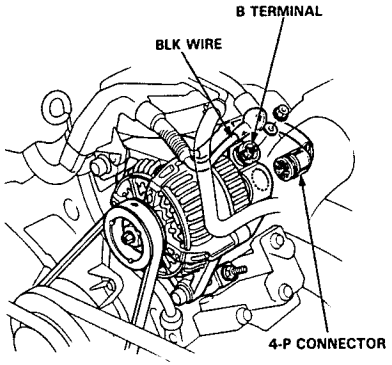

3. Loosen the adjustment lock bolt and adjusting nut, then remove the belt from the pulley.

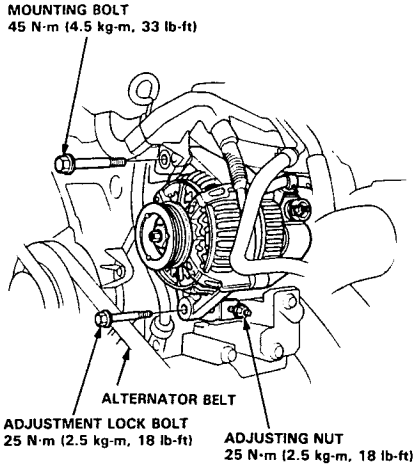

4. Remove the mounting bolt and the adjustment lock bolt. Then lift out the alternator.

5. Install the alternator in the reverse order of removal, then adjust belt tension (see pages 23-121, and 122).

Alternator Overhaul

NOTE: Only if the front bearing needs replacement, is it necessary to separate the pulley, drive end housing, and rotor.

To loosen the pulley locknut, use 10 mm and 22 mm wrenches. If necessary, use an impact wrench.

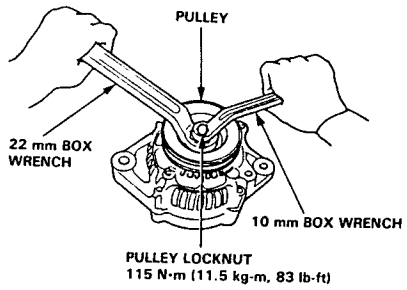

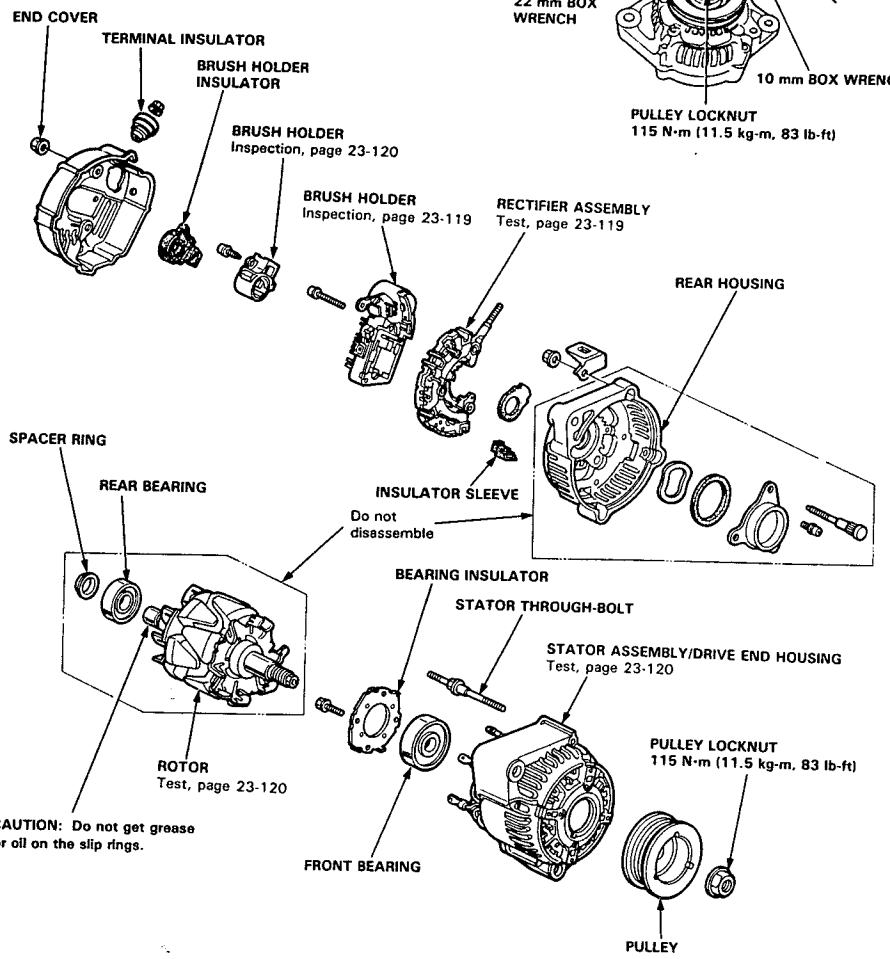

Rectifier Test

NOTE:
- The diodes are designed to allow current to pass in one direction while blocking it in the opposite direction. Each diode must be tested for continuity in both directions. Since the alternator rectifier is made up of eight diodes (four pairs), there are a total of 16 checks.
- Use an ohmmeter capable of checking diodes.

1. Check for continuity in each direction between the B and P terminals, and between the E (ground) and P terminals of each diode pair. All diodes should have continuity in only one direction.

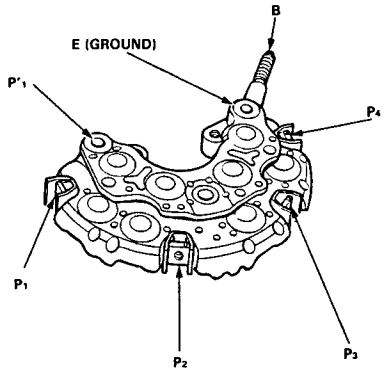

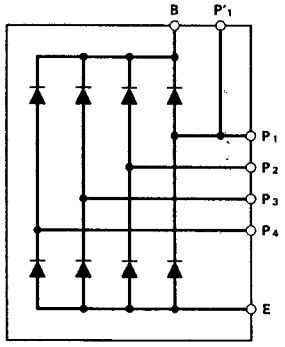

2. If any of the eight diodes tests bad, replace the rectifier assembly (diodes are not available separately).

Alternator Brush Inspection

1. Remove the end cover, then take out the brush holder by removing its two screws.

2. Measure the length of the brushes with a vernier caliper.

   Alternator Brush Length:
   Standard: 10.5 mm (0.41 in)
   Service Limit: 1.5 mm (0.06 in)

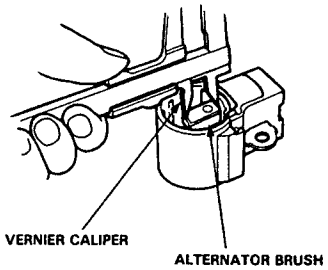

3. If the brushes are less than the service limit, replace the brush holder assembly.

Rotor Slip Ring Test

1. Check that there is continuity between the slip rings.
2. Check that there is no continuity between the slip rings and the rotor or rotor shaft.

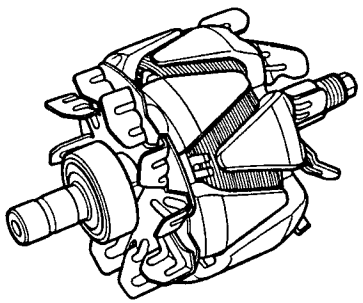

3. If the rotor fails either continuity check, replace it.

Stator Test

1. Check that there is continuity between each pair of leads.
2. Check that there is no continuity between each lead and the coil core.

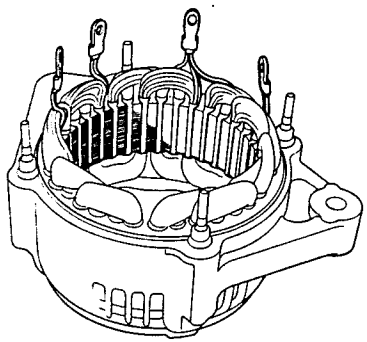

3. If the coil fails either continuity check, replace the stator.

Alternator Belt Adjustment

Deflection method:
Apply a force of 100 N (10 kg, 22 lbs) and measure the deflection between the alternator and crankshaft pulley.

Deflection: 7.5–9.5 mm (0.30–0.37 in)

NOTE:
- On a brand new belt (one that has been run for less than five minutes), the deflection should be 5–7 mm (0.20–0.28 in) when first measured.
- If there are cracks or any damage evident in the belt, replace it with a new one.

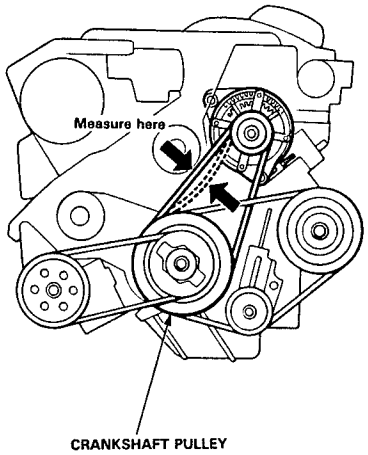

Tension gauge method:
Attach the belt tension gauge to the belt and measure the tension. Follow the gauge manufacturer's instructions.

Tension: 350–500 N (35–50 kg, 77–110 lbs)

NOTE:
- On a brand-new belt (one that has been run for less than five minutes), the tension should be 700–900 N (70–90 kg, 154–198 lbs) when first measured.
- If there are cracks or any damage evident in the belt, replace it with a new one.

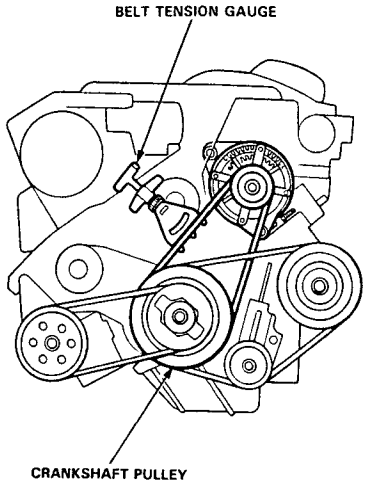

(cont'd)

Alternator Belt Inspection (cont'd)

If adjustment is necessary:

1. Loosen the mounting bolt and the adjusting lock bolt.
2. Move the alternator by turning the adjusting nut to obtain the proper belt tension, then retighten the bolts.

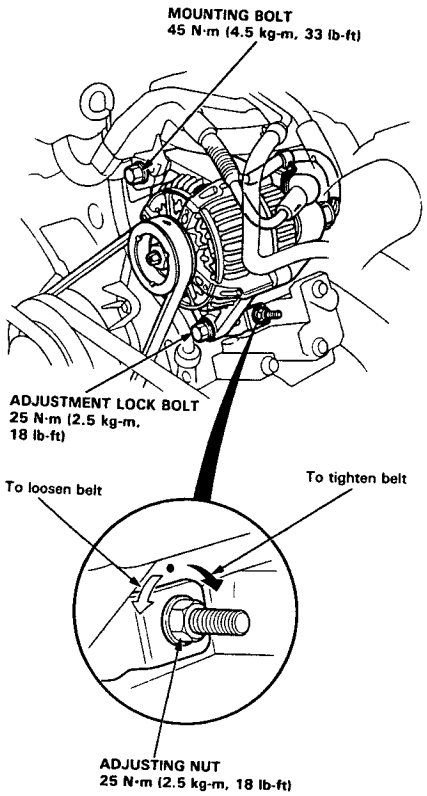

3. Recheck the deflection or tension of the belt.

Component Location Index

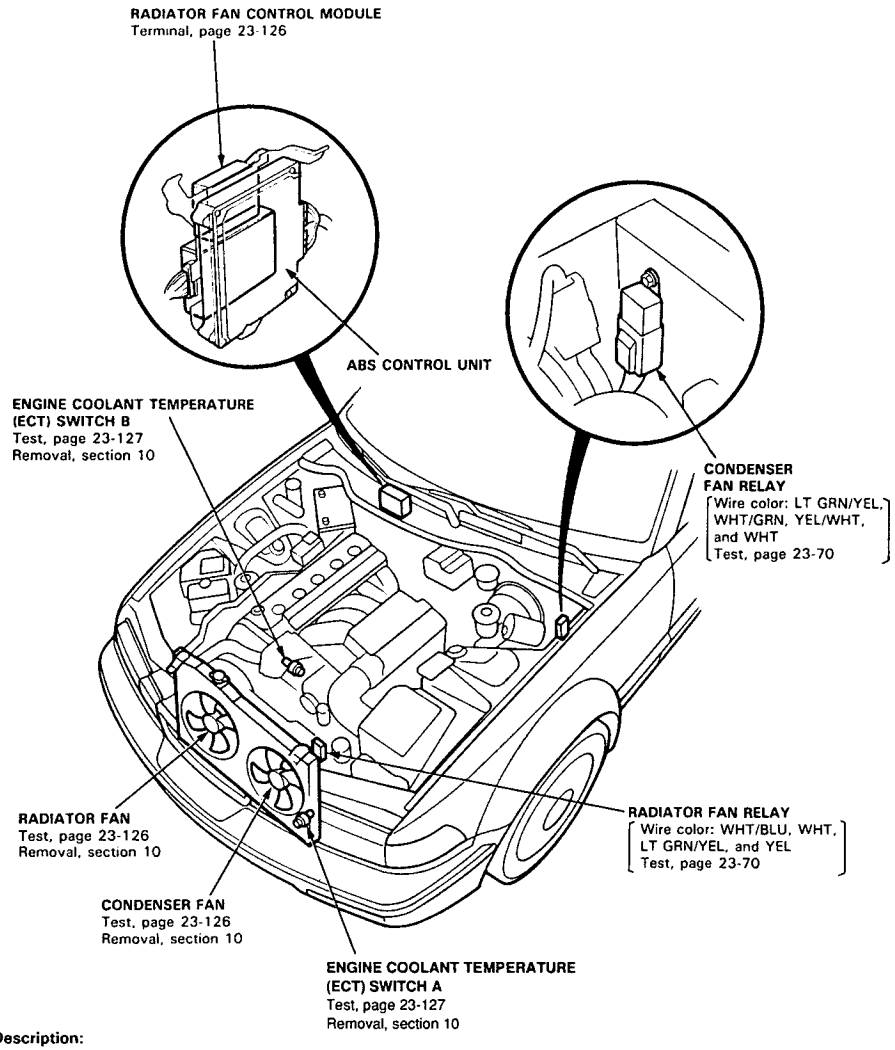

Description:

Radiator Fan Control System

When the engine coolant temperature (ECT) is above approximately 223°F (106°C) after the engine has stopped, the radiator fan will run for about 15 minutes.

The engine coolant temperature (ECT) switch B is located behind the water outlet cover, and the radiator fan control module is located under the right side of the dash.

Radiator and Condenser Fan Controls

Circuit Diagram

NOTE: Different wires with the same color have been given a number suffix to distinguish then (for example, WHT[1] and WHT[2] are not the same).

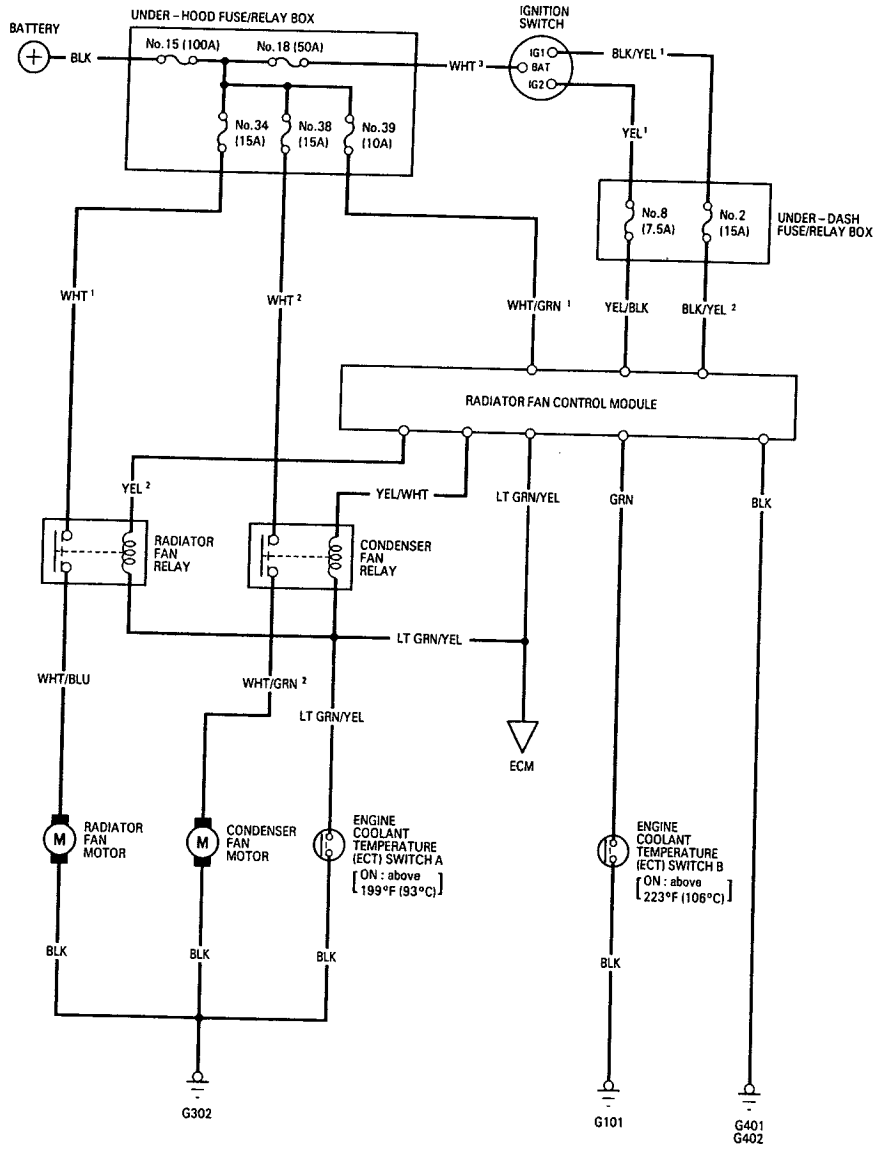

Troubleshooting

NOTE: The numbers in the table show the troubleshooting sequence.

Symptom \ Item to be inspected		Blown No. 34 (15 A) or No. 38 (15 A) fuse (In the under-hood fuse/relay box)	Blown No. 39 (10 A) fuse (In the under-hood fuse/relay box)	Blown No. 2 (15 A) fuse (In the under-hood fuse/relay box)	Blown No. 8 (7.5 A) fuse (In the under-hood fuse/relay box)	Radiator fan or condenser fan relay	Radiator fan or condenser fan motor	Engine coolant temperature (ECT) switch A	Engine coolant temperature (ECT) switch B	Faulty radiator fan control module	A/C system	Poor ground	Open circuit, loose or disconnected terminals
Only one fan operates (with engine and A/C ON).		1				2	3					G302	WHT[1], WHT[2], WHT/BLU, WHT/GRN, YEL[2], YEL/WHT or LT GRN/YEL
Fans do not rotate.	Under all conditions.				1			2	3			G302 G401 G402	YEL/BLK, LT GRN/YEL or YEL[1]
	A/C ON										1		
Radiator fan control module fails to function properly.			1	2					3	4		G101 G401 G402	GRN, YEL[2], WHT/GRN[2] or BLK/YEL[2]

Radiator and Condenser Fan Controls

Radiator Fan Control Module Terminals

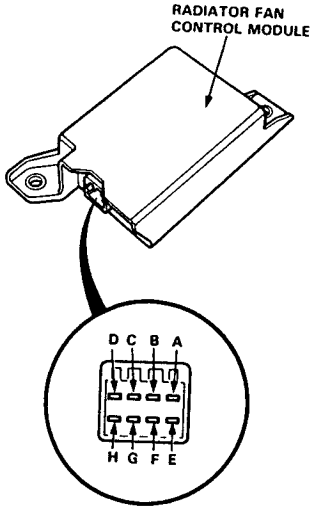

NOTE: See A/C section 22 for input test.

Terminal	Wire	Connects to
A	BLK	Ground (G401, G402)
B	YEL/WHT	Condenser fan relay (coil ⊕)
C	YEL/BLK	Power supply (For radiator fan and condenser fan relays by way of radiator fan control module with ignition switch ON)
D	YEL	Radiator fan relay (coil ⊕)
E	LT GRN/YEL	Radiator fan and condenser fan relays (coil ⊖)
F	BLK/YEL	IG1 (Radiator fan control module reset signal)
G	WHT/GRN	Power supply (For radiator fan control module with ignition switch OFF)
H	GRN	Engine coolant temperature (ECT) switch B

Fan Motor Test

1. Disconnect the 2-P connector from each fan motor.
2. Test the motor operation by connecting battery power to the A terminal, and ground to the B terminal.
3. If the fan motor fails to run or does not run smoothly, replace it.

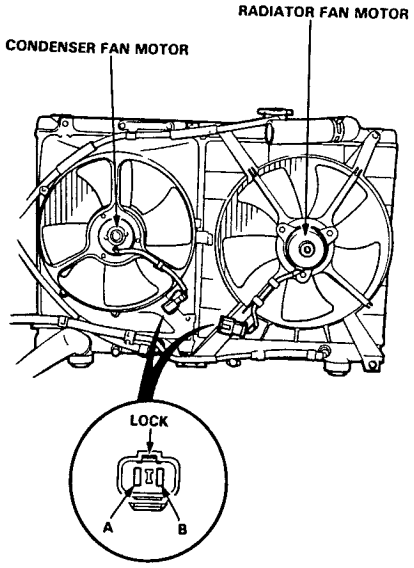

View from terminal side

Engine Coolant Temperature (ECT) Switch Test

NOTE: Bleed air from the cooling system after installing the engine coolant temperature (ECT) switch (see section 10).

1. Remove ECT switch B from the thermostat housing, or ECT switch A from radiator lower tank.
2. Suspend the ECT switch in a container of coolant as shown.

   NOTE: The illustration shows ECT switch A.

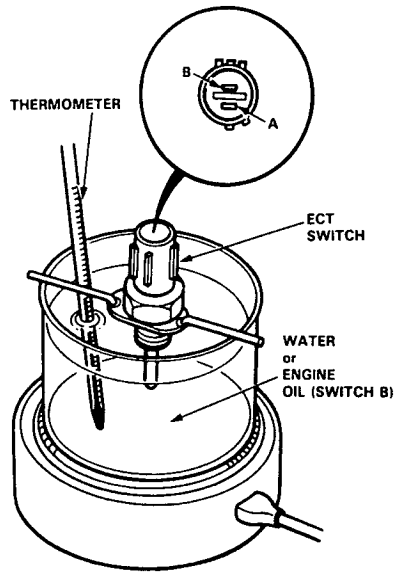

3. Heat the coolant and check coolant temperature with a thermometer.
4. Measure the resistance between the A and B terminals according to the table.

Temperature \ Terminal		A	B
Switch A	Above 90–96°C (194–205°F)	○	○
	Below 86–91°C (187–196°F)		
Switch B	Above 103–109°C (217–228°F)	○	○
	Below 97–102°C (207–216°F)		

NOTE: After completing the inspection, remove all traces of engine oil from ECT switch B.

Gauge Assembly

Gauge/Indicator/Terminal Location Index

CAUTION:
- All SRS electrical wiring harnesses are covered with yellow outer insulation.
- Before disconnecting the SRS wire harness, install the short connector (s) on the airbag (s).
- Replace the entire affected SRS harness assembly if it has an open circuit or damaged wiring.

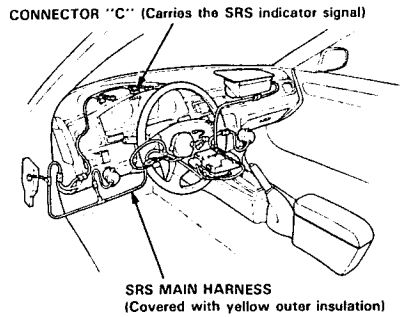

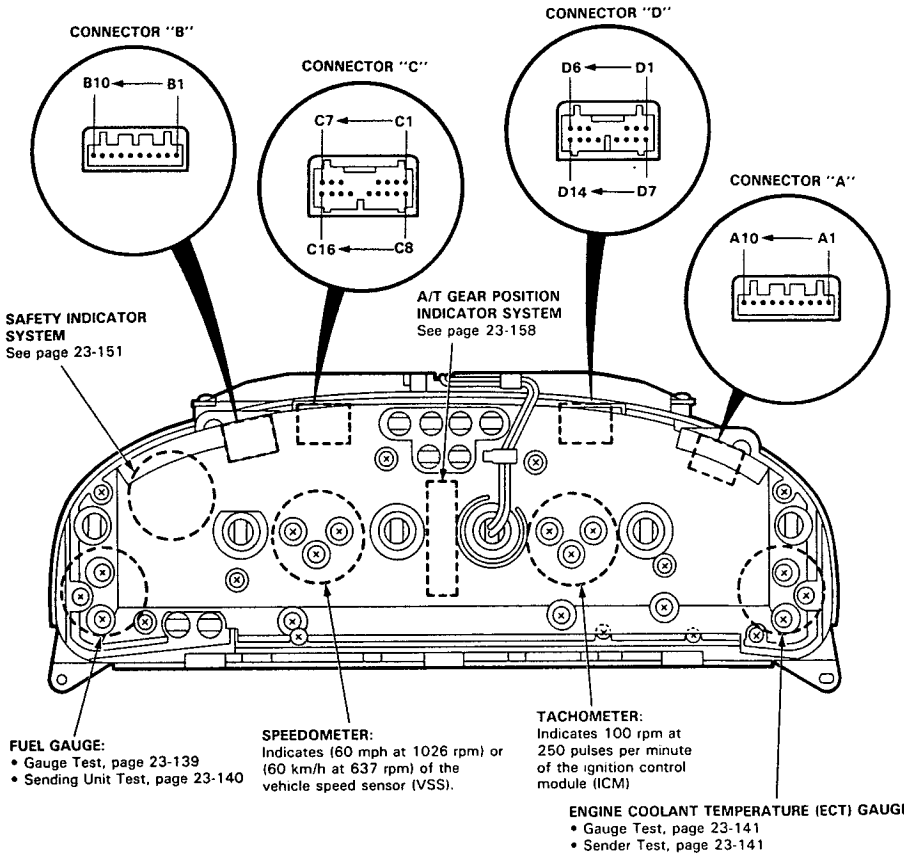

Gauge Assembly

Circuit Diagram

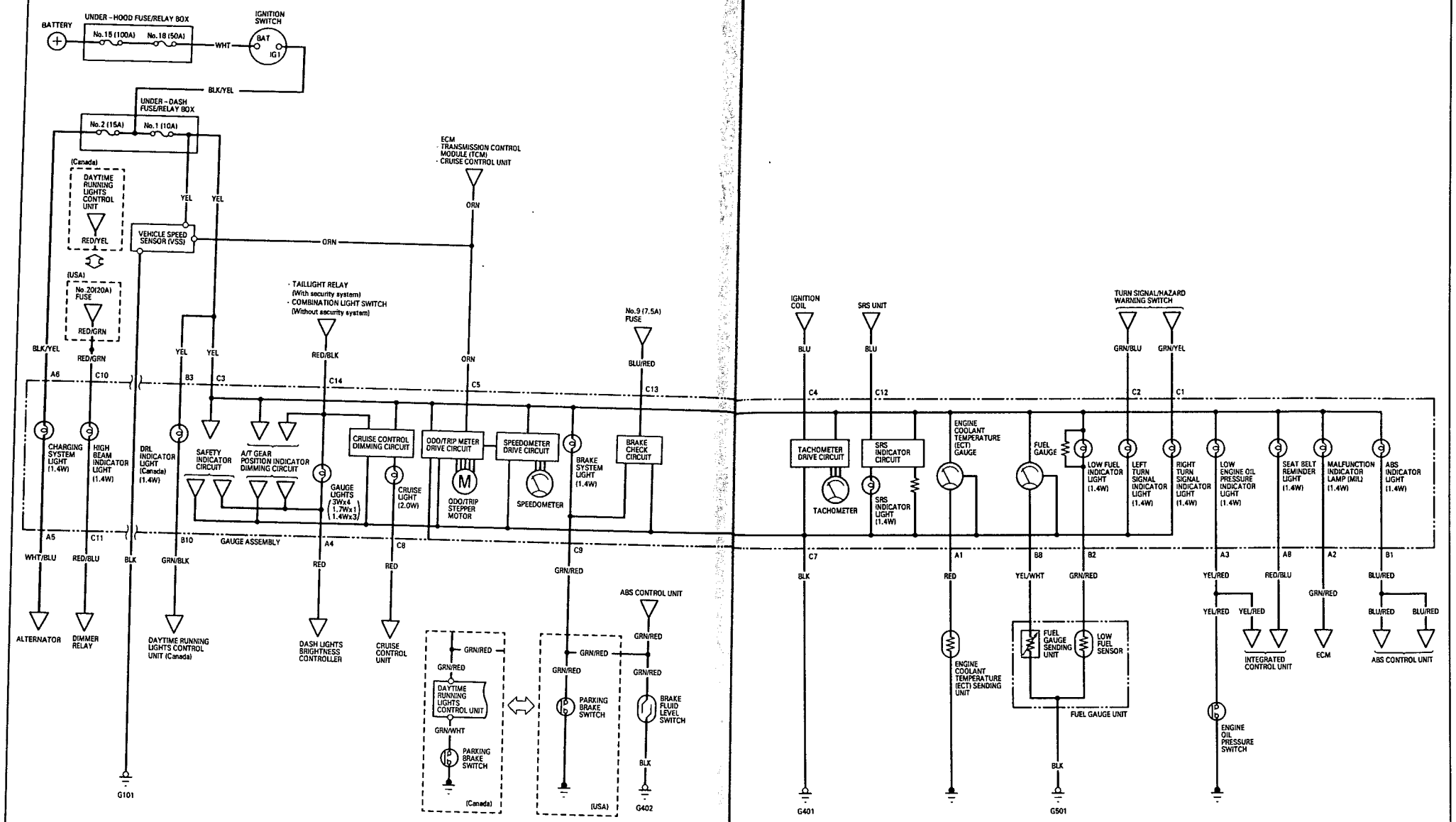

Removal

CAUTION:
- All SRS electrical wiring harnesses are covered with yellow outer insulation.
- Before disconnecting the SRS wire harness, install the short connector (s) on the airbag (s).
- Replace the entire affected SRS harness assembly if it has an open circuit or damaged wiring.

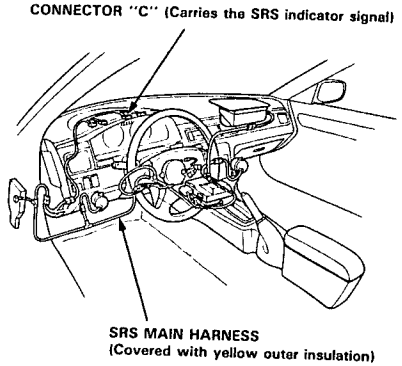

1. Remove the dashboard lower cover.

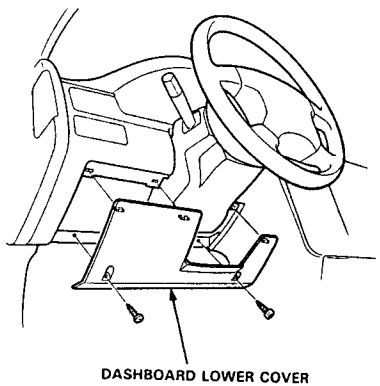

2. Remove the upper and lower column covers.

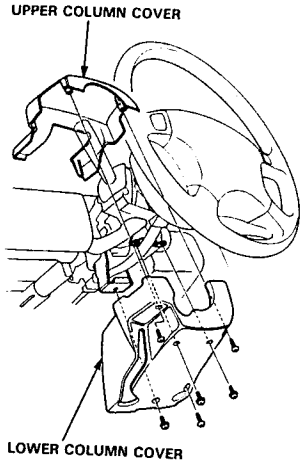

3. Carefully pry the switches out of the instrument panel.

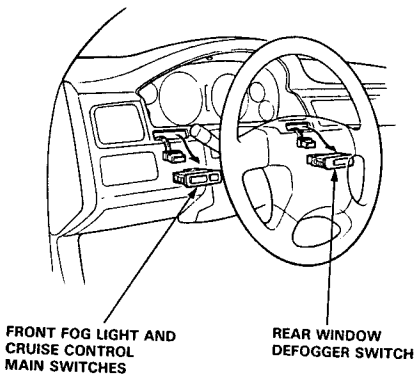

4. Remove the four screws, then remove the instrument panel from the dashboard.

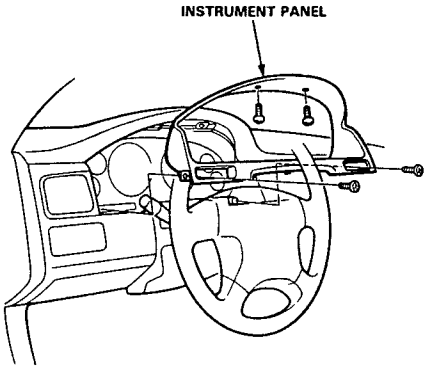

5. Place a protective cloth over the combination light switch to prevent scratching the gauge assembly. Remove the four screws from the gauge assembly, and pull the gauge assembly out.

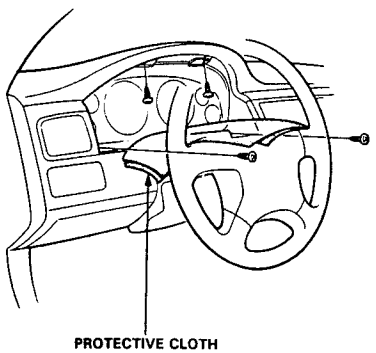

6. Disconnect the connectors from the gauge assembly.

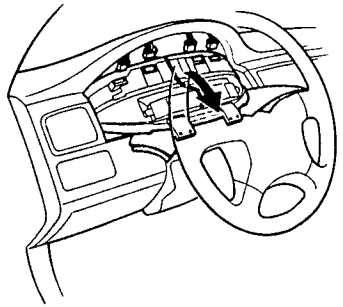

7. Take out the gauge assembly as shown.

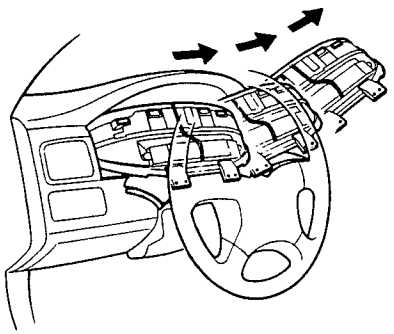

Gauge Assembly

Disassembly

NOTE:
- Handle the terminals and printed circuit boards carefully to avoid damaging them.
- If replacement is required, replace the speedometer and tachometer as a unit.

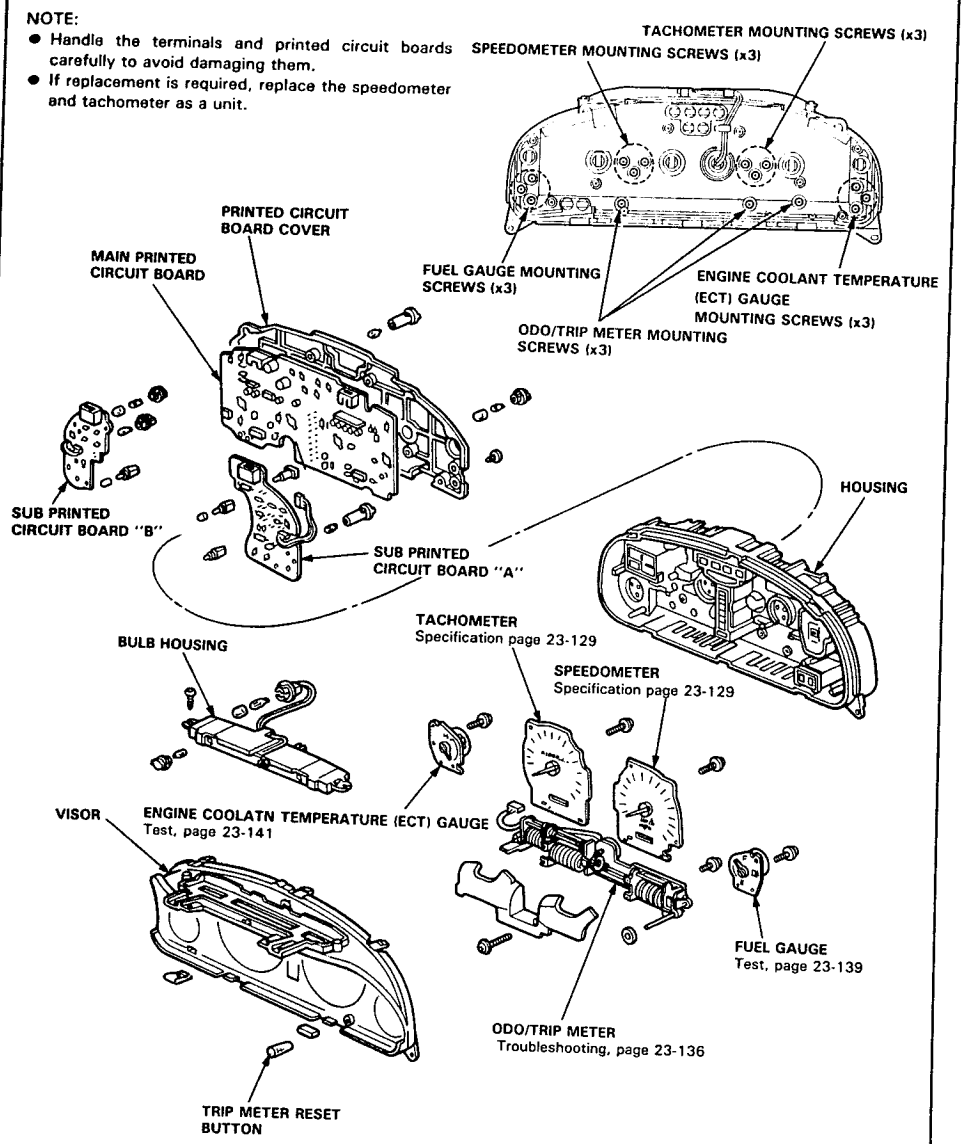

Bulb Locations

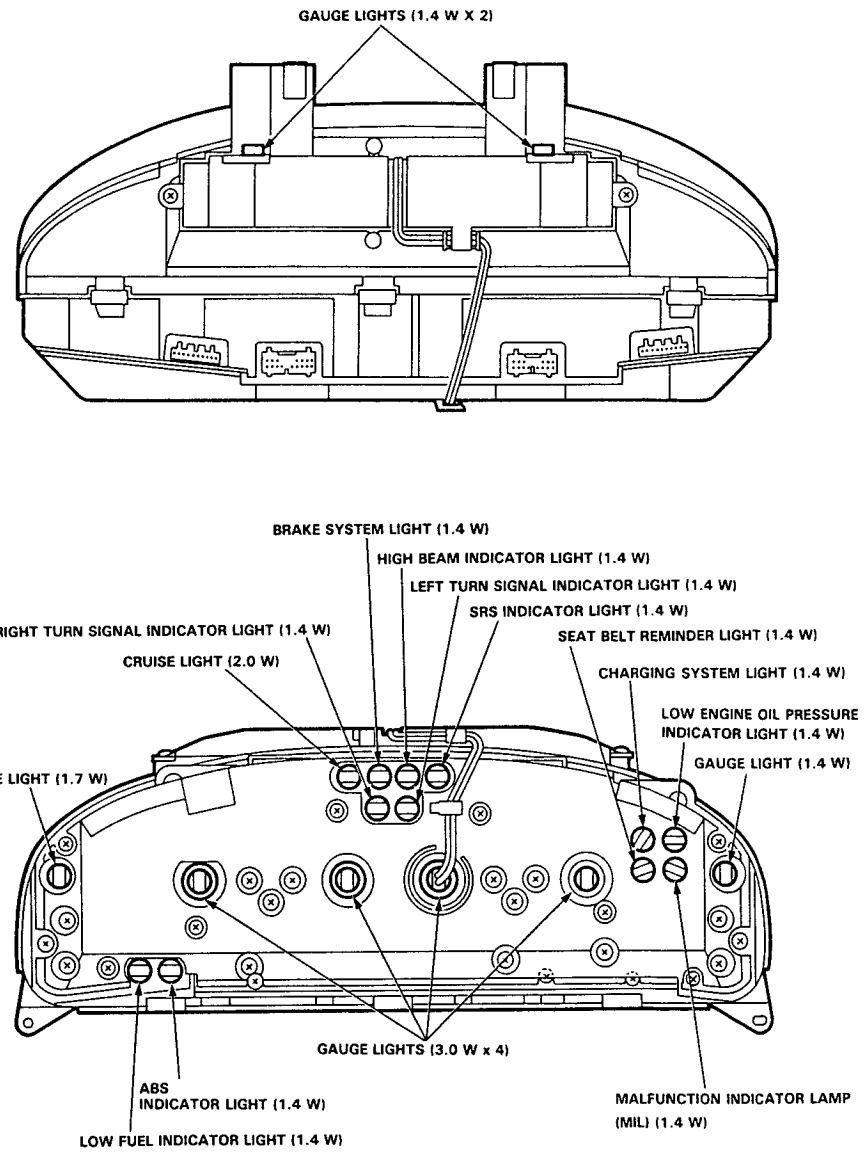

Troubleshooting

NOTE: The numbers in the table show the troubleshooting sequence.

Symptom \ Item to be inspected	Blown No. 1 (10 A) fuse (In the under-dash fuse/relay box)	Speedometer	Odo/Trip meter	Printed circuit board	Vehicle speed sensor (VSS) input test	Odometer connector at printed circuit board	VSS test flowchart
Odometer and trip meter work, but speedometer does not.		1		2			
Speedometer works, but odometer and trip meter do not.			1	2		3	
Speedometer, odometer, and trip meter do not work.	1				2		3

NOTE: VSS ground is via ECM (G101).

VSS Input Test (At harness side of 3-P connector)

No.	Wire	Test Condition	Test: Desired result	Possible cause if result is not obtained
1	BLK	Under all conditions	Check for continuity to ground: There should be continuity.	• An open in the wire. • Poor ground (G101).
2	YEL	Ignition switch ON	Check for voltage to ground: There should be battery voltage.	• Blown No. 1 (10 A) fuse. • Short to ground.
3	ORN	Ignition switch ON	Check for voltage to ground: There should be about 5 V.	• Short to ground. • An open in the wire.

NOTE: A short to ground in the ORN wire can be caused by a short in any component connected to it.

VSS Test

Speedometer does not work.

- Inspect No. 1 (10 A) fuse in the under-dash fuse/relay box before testing.
- Disconnect the 3-P connector at the VSS.
- Turn the ignition switch ON.
- Measure voltage between the YEL wire terminal and the BLK wire terminal in the harness side of the 3-P connector.

(To next page)

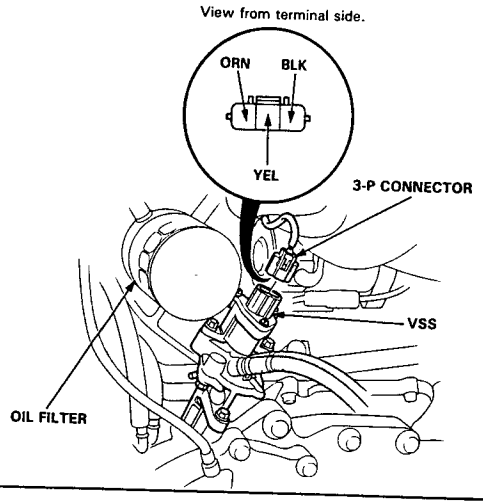

(From previous page)

- Is there battery voltage? — NO → Check for continuity between the BLK terminal and body ground.
  - Is there continuity? — NO → **Repair open between VSS and ground G101 via ECM.**
  - YES → **Repair open in the YEL wire, between VSS and under-dash fuse/relay box.**
- YES → Measure voltage between the ORN and the BLK wire terminals.
- Is there about 5 V? — NO → **Repair open in the ORN wire or short to body ground.**
- YES → Reconnect the 3-P connector to the VSS.
- Raise the front of the car and support it with safety stands.
- Touch a probe to the ORN wire and connect it to body ground through a voltmeter.
- Put the car in neutral with the ignition switch ON.
- Slowly rotate one wheel with the other wheel blocked.
- Does voltage pulse from 0 to about 5V? — NO → **Replace the VSS (see page 23-138).**
- YES → Disconnect the 13-P connector at the speedometer.
- Touch a probe to the ORN wire and connect it to body ground through a voltmeter.
- Slowly rotate one wheel with the other wheel blocked.
- Does the meter indicate pulsing voltage? — NO → **Repair open in the ORN wire between the VSS and the speedometer.**
- YES → **Replace the speedometer.**

Vehicle Speed Sensor (VSS)

Replacement

1. Disconnect the 3-P connector from the vehicle speed sensor (VSS).
2. Remove the mounting bolts, then remove the VSS.

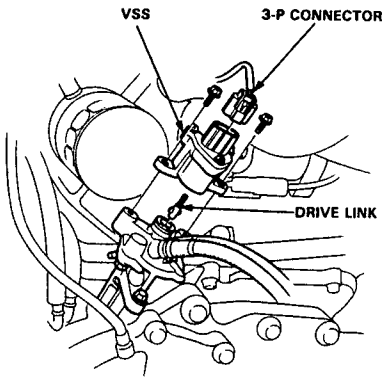

3. Install in the reverse order of removal.

   NOTE: The VSS drive link is a very small part; be careful not to lose it.

Warning System

Engine Oil Pressure Switch Test

1. Remove the YEL/RED wire from the engine oil pressure switch.

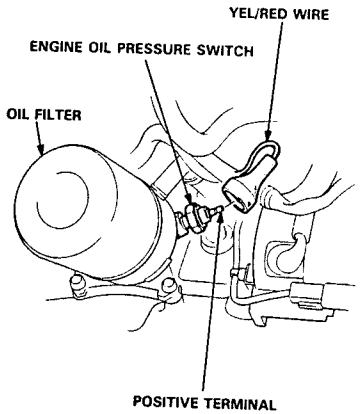

2. Check for continuity between the positive terminal and the engine (ground) with the ignition switch OFF.
   - If there is continuity, go on to step 3.
   - If there is no continuity, replace the switch.
3. Check for continuity again, this time with the engine running.
   - If there is no continuity, the switch is OK.
   - If there is continuity, do not replace the switch; first check other possible causes in step 4.
4. Make sure engine oil level is OK, then check engine oil pressure (see section 8).
   - If engine oil pressure is OK, replace the switch.
   - If engine oil pressure is low, remove, inspect, and, if necessary, replace the engine oil pump (see section 8).

Gauge Test

NOTE: Refer to page 23-131 for the fuel gauge system circuit.

1. Check the No. 1 (10 A) fuse in the under-dash fuse/relay box before testing.
2. Remove the access panel from the floor.
3. Disconnect the 3-P connector from the fuel gauge sending unit.

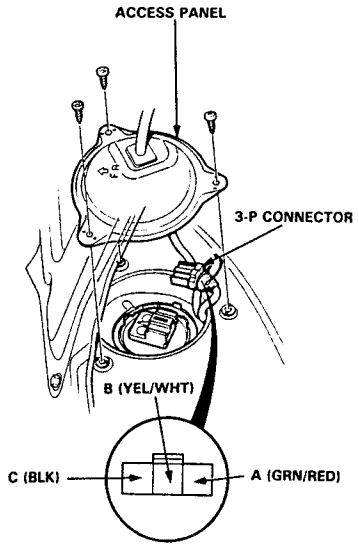

View from wire side.

4. Connect the voltmeter positive probe to the B (YEL/WHT) terminal and the negative probe to the C (BLK) terminal, then turn the ignition switch ON. There should be between 5 and 8 V.
   - If the voltage is as specified, go to step 5.
   - If the voltage is not as specified, check for:
   - An open in the YEL, YEL/WHT or BLK wire.
   - Poor ground (G501).
5. Turn the ignition switch OFF. Attach a jumper wire between the B (YEL/WHT) and C (BLK) terminals, then turn the ignition switch ON.
   Check that the pointer of the fuel gauge starts moving toward the "F" mark.

   CAUTION: Turn the ignition switch OFF before the pointer reaches "F" on the gauge dial. Failure to do so may damage the fuel gauge.

   NOTE: The fuel gauge is a bobbin (cross-coil) type, hence the fuel level is continuously indicated even when the ignition switch is OFF, and the pointer moves more slowly than that of a bimetal type.

   - If the pointer of the fuel gauge does not move at all, replace the gauge.
   - If the gauge is OK, inspect the fuel gauge sending unit.

Sending Unit Test

WARNING **Do not smoke while working on the fuel system. Keep open flames away from your work area.**

1. Remove the access panel from the floor.
2. With the ignition switch OFF, disconnect the 3-P connector from the fuel gauge sending unit.
3. Remove the fuel gauge sending unit.

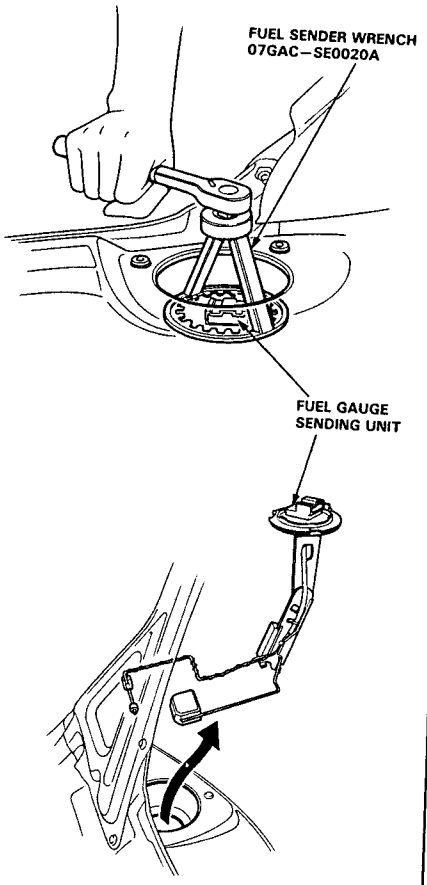

4. Measure the resistance between the B and C terminals at E (EMPTY), 1/2 (HALF FULL) and F (FULL) by moving the float.

Float Position	E	1/2	F
Length	18.7 mm (0.74 in)	80.7 mm (3.18 in)	152.8 mm (6.02 in)
Resistance (Ω)	105–110	25.5–39.5	2–5

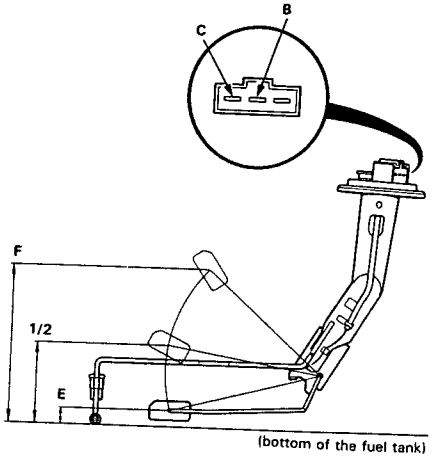

5. If unable to obtain the above readings, replace the fuel gauge sending unit.

Engine Coolant Temperature (ECT) Gauge

Gauge Test

NOTE: Refer to page 23-131 for the wiring description of the engine coolant temperature (ECT) gauge circuit diagram.

1. Check the No. 15 (10 A) fuse in the under-dash fuse/relay box before testing.
2. Make sure the ignition switch is OFF, then disconnect the RED wire from the ECT gauge sending unit and ground it with a jumper wire.

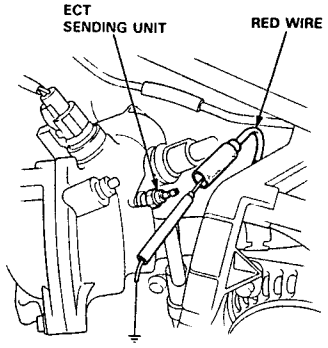

3. Turn the ignition switch ON.
   Check that the pointer of the ECT gauge starts moving toward the "H" mark.

   CAUTION: Turn the ignition switch OFF before the pointer reaches "H" on the gauge dial. Failure to do so may damage the gauge.

   - If the pointer of the gauge does not move at all, check for an open in the YEL or RED wire. If the wires are OK, replace the ECT gauge.
   - If the ECT gauge works, test the ECT sending unit.

ECT Sending Unit Test

1. Disconnect the RED wire from the ECT sending unit.
2. With the engine cold, use an ohmmeter to measure resistance between the positive terminal and the engine (ground).

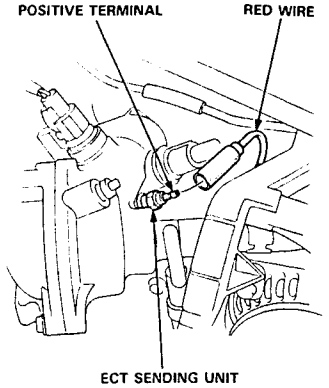

3. Check the temperature of the coolant.
4. Run the engine and measure the change in resistance with the engine at operating temperature (the radiator fan comes on).

Temperature	133 °F (56 °C) (Engine cold)	185 °F (85 °C)–212 °F (100 °C)
Resistance (Ω)	142	49–32

5. If the obtained readings are substantially different from the specifications above, replace the sending unit.

Brake Warning System

Parking Brake Switch Test

1. Remove the floor console and disconnect the connector from the switch.

2. There should be continuity between the positive terminal and body ground with the brake lever up. There should be no continuity with the brake lever down.

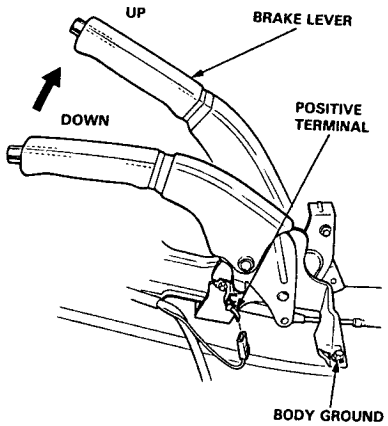

NOTE (Canada):
If the parking brake switch is OK, but the brake warning system does not function, perform the input test for the daytime running lights control unit (see page 23-180).

Brake Fluid Level Switch Test

1. Remove the reservoir cap. Check that the float moves up and down freely; if it doesn't, replace the reservoir cap assembly.

2. Check for continuity between the terminals with the float up and down. There should be continuity with the float down and no continuity with the float up. Replace the reservoir cap assembly if necessary.

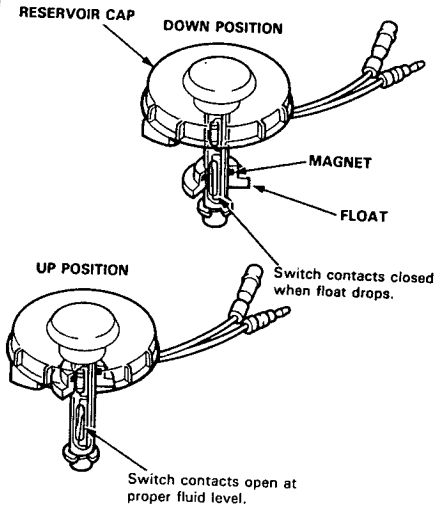

Seat Belt Reminder

Seat Belt Switch Test

1. Slide the driver's seat forward, then disconnect the 2-P connector from the seat belt switch.

2. There should be continuity between the A and B terminals when the driver's seat belt is not buckled. There should be no continuity when the driver's seat belt is buckled.

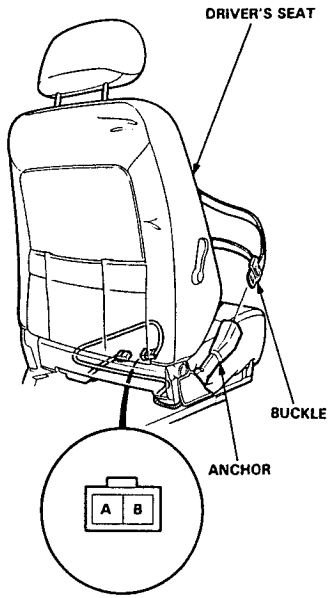

Low Fuel Indicator

Indicator Light Test

NOTE: Refer to page 23-131 for the wiring description of the low fuel indicator circuit.

1. Park car on level ground.

   ⚠WARNING Do not smoke while working on the fuel system. Keep open flames away from your work area. Drain fuel only into an approved container.

2. Drain fuel tank into an approved container. Then install the drain bolt with a new washer.

3. Add less than 8.5ℓ (2.2 U.S.Gal, 1.8 Imp.Gal) of fuel and turn the ignition switch on. The low fuel indicator light should come on within four minutes.

4. Then add approx. 4ℓ (1.1 U.S.Gal, 0.9 Imp.Gal) of fuel.

   - The light should go out within four minutes.

   - If the light did not come on in step 3, remove the access panel and disconnect the 3-P connector from the fuel gauge sending unit. Connect the A (GRN/RED) terminal to the C (BLK) terminal with a jumper wire.

     – If the light comes on, the problem is either the sending unit or its ground.
     – If the light does not come on, the problem is an open in the GRN/RED wire to the gauge assembly, no power to the gauge, or a blown bulb.

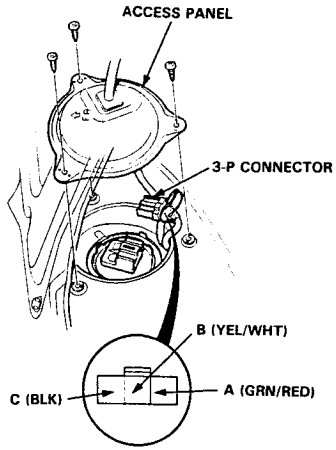

View from wire side

Interlock System

Component Location Index

CAUTION:
- All SRS electrical wiring harnesses are covered with yellow outer insulation.
- Before disconnecting the SRS wire harness, install the short connector (s) on the airbag (s).
- Replace the entire affected SRS harness assembly if it has an open circuit or damaged wiring.

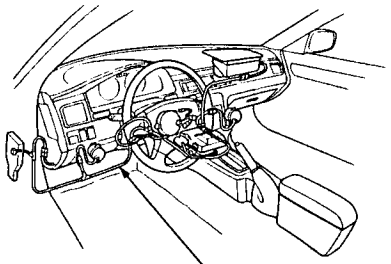

A/T GEAR POSITION INDICATOR
See page 23-158
A/T GEAR POSITION SWITCH
Test, page 23-162

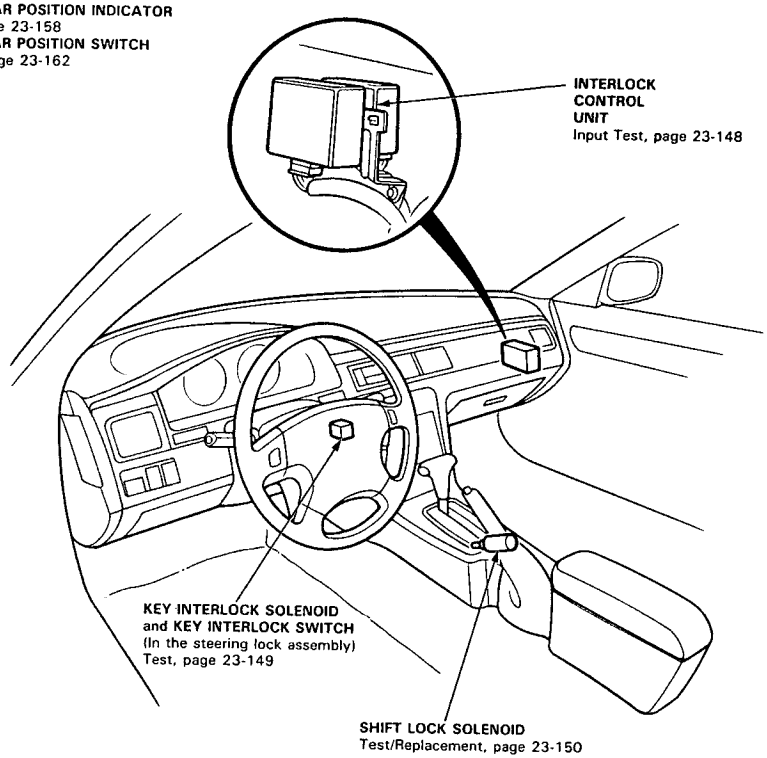

Description

The car is equipped with the following devices to prevent inadvertent shifting:

- A/T shift lever with shift lock
- Key cylinder with interlocked ignition key

Shift Lock System:
The shift lock system prevents the shift lever from moving to [R] or [D4] from the [P] position unless the brake pedal is depressed and the accelerator is in its rest position.

NOTE:
- The shift lever cannot be shifted when the brake pedal and the accelerator are depressed on at the same time.
- In case of system malfunction, the shift lever can be released by pushing a key into the release slot near the shift lever.

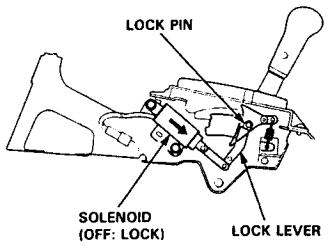

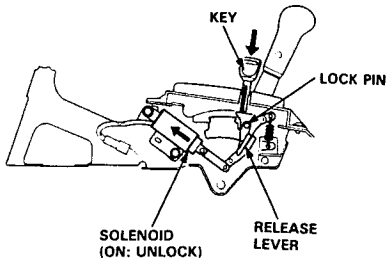

Key Interlock System:
The ignition key cannot be removed from the ignition switch unless the shift lever is in the [P] position.
If the key is inserted when the shift lever is in any position other than [P], a solenoid is activated, making it impossible for the key to be removed until the shift lever is moved to the [P] position.

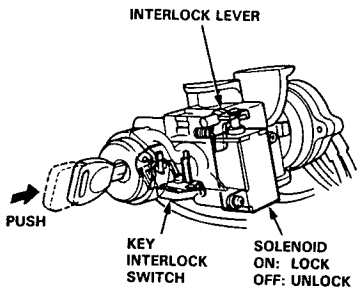

The shift lever is the [P] position.

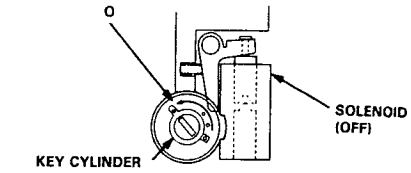

The shift lever is in any position except [P].

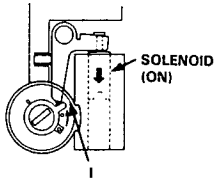

Interlock System

Circuit Diagram

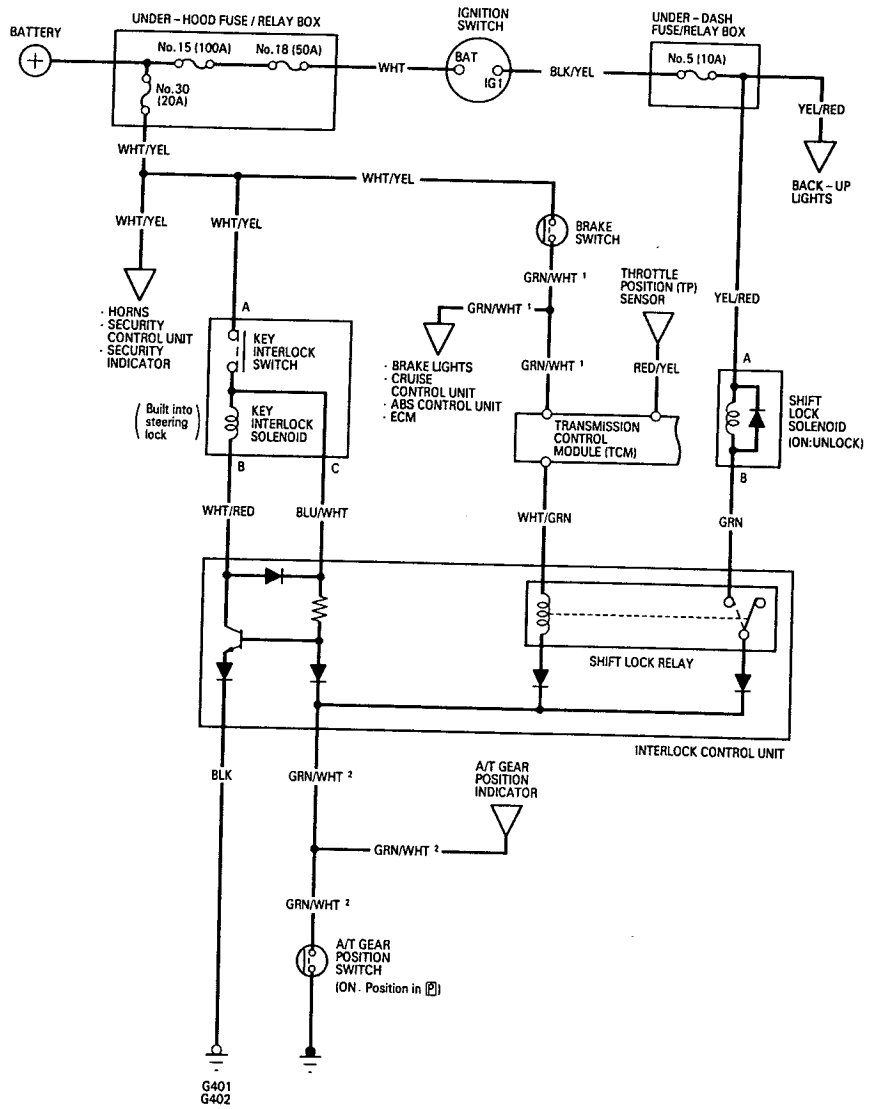

Control Unit Input Test

CAUTION:

- **All SRS electrical wiring harnesses are covered with yellow outer insulation.**
- **Before disconnecting the SRS wire harness, install the short connector (s) on the airbag (s).**
- **Replace the entire affected SRS harness assembly if it has an open circuit or damaged wiring.**

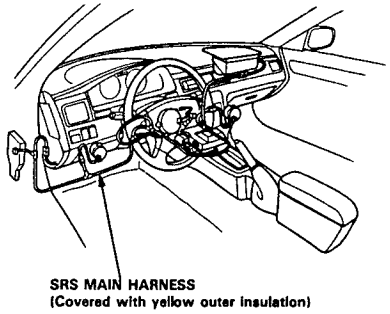

Disconnect the 8-P connector from the control unit. Inspect the connector terminals to be sure they are all making good contact.

- If the terminals are bent, loose, or corroded, repair them as necessary, and recheck the system.
- If the terminals look OK, make the following input tests at the connector terminals.
  - If any test indicates a problem, find and correct the cause, then recheck the system.
  - If all the input tests prove OK, the control unit must be faulty; replace it.

NOTE: If the shift lock solenoid clicks when the ignition switch is ON and the brake pedal is pushed (the shift lever is in the P position), the shift lock system is electronically normal. If the shift lever can not be shifted from P position, see section 14.

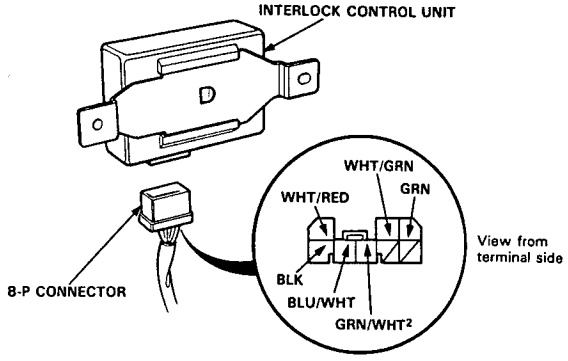

(cont'd)

Control Unit Input Test (cont'd)

Shift Lock System:

No.	Wire	Test condition	Test: Desired result	Possible cause if result is not obtained
1	WHT/GRN	Ignition switch ON. Brake pedal pushed.	Check for voltage to ground: There should be battery voltage.	• Blown No. 30 (20 A) fuse (in the under-hood fuse/relay box). • Faulty brake switch. • Faulty throttle position (TP) sensor. • Faulty transmission control module (TCM). • An open in the wire.
		Ignition switch ON. Step on the brake pedal and the accelerator at the same time.	Check for voltage to ground: There should not be battery voltage.	
2	GRN/WHT²	Shift lever position in [P].	Check for continuity to ground: There should be continuity.	• Faulty A/T gear position switch. • Poor ground. • An open in the wire.
3	GRN	Ignition switch ON.	Check for voltage to ground: There should be battery voltage.	• Blown No. 5 (10 A) fuse (in the under-dash fuse/relay box). • Faulty shift lock solenoid. • An open in the wire.

Key Interlock System:

No.	Wire	Test condition	Test: Desired result	Possible cause if result is not obtained
1	BLK	Under all conditions.	Check for voltage to ground: There should be continuity.	• Poor ground (G401, G402). • An open in the wire.
2	GRN/WHT²	Shift lever position in [P].	Check for continuity to ground: There should be continuity.	• Faulty A/T gear position switch. • Poor ground. • An open in the wire.
3	WHT/RED	Ignition switch turned to ACC and the key pushed in.	Check for voltage to ground: There should be battery voltage.	• Blown No. 30 (20 A) fuse (in the under-hood fuse/relay box). • Faulty steering lock assembly (key interlock solenoid). • An open in the wire.
4	BLU/WHT	Ignition switch turned to ACC and the key pushed in.	Check for voltage to ground: There should be battery voltage.	• Blown No. 30 (20 A) fuse (in the under-hood fuse/relay box). • Faulty steering lock assembly (key interlock solenoid). • An open in the wire.

Key Interlock Solenoid Test

CAUTION:
- **All SRS electrical wiring harnesses are covered with yellow outer insulation.**
- **Before disconnecting the SRS wire harness, install the short connector (s) on the airbag (s).**
- **Replace the entire affected SRS harness assembly if it has an open circuit or damaged wiring.**

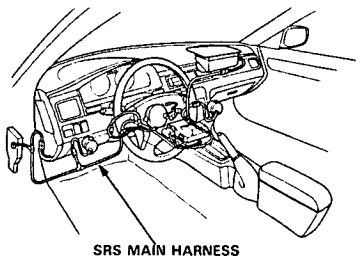

SRS MAIN HARNESS
(Covered with yellow outer insulation)

1. Remove the dashboard lower cover.
2. Remove the knee bolster.
3. Disconnect the 8-P connector from the main wire harness.

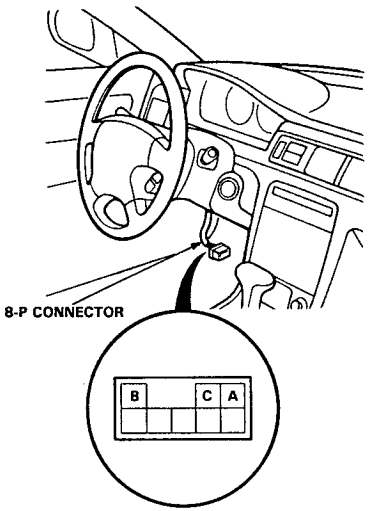

View from wire side

4. Check for continuity between the terminals in each switch position according to the table.

Position	Terminal	A	B	C
Ignition switch ACC	Key pushed in.	○	○	○
	Key released. *		○	○

*: 15 – 20 ohms

5. Check that the key cannot be removed when battery power and ground are connected to the A and B terminals.
   - If the key can not be removed, the key interlock solenoid is OK.
   - If the key can be removed, replace the steering lock assembly (key interlock solenoid is not available separately).

Interlock System

Shift Lock Solenoid Test/Replacement

1. Remove the console, then disconnect the 2-P connector of the shift lock solenoid from the main wire harness.

   NOTE: Do not connect power to the B (−) terminal (reverse polarity) or you will damage the diode inside the solenoid.

2. Connect battery power to the A terminal, ground the B terminal momentarily, and check solenoid operation.

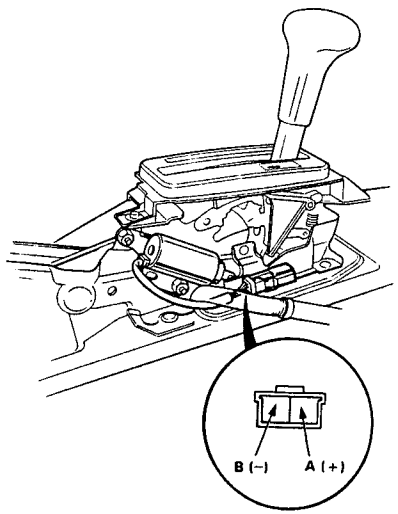

View from wire side

- If the solenoid does not operate, replace it as described in steps 3, 4, and 5.
- If the solenoid does operate, check and, if necessary, adjust its two positions as shown in step 5.

3. Remove the E-ring and the solenoid pin.

4. Remove the self-locking nuts and shift lock solenoid, then install the new solenoid in the reverse order of removal.

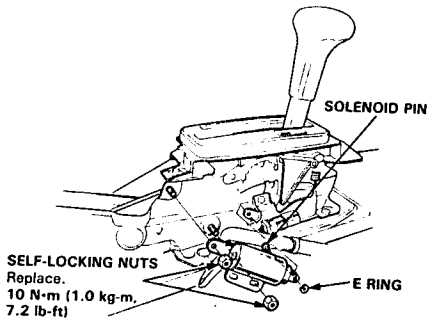

5. Check and, if necessary, adjust the solenoid's position.

   - When the shift lock solenoid is ON, check that there is a clearance of 2.5±0.5 mm (0.098±0.020 in) between the top rear corner of the shift lock lever and the lock pin groove, then tighten the self-locking nuts.

   NOTE: Use new self-locking nuts.

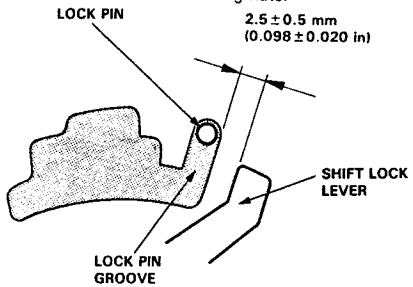

   - When the shift lock solenoid is OFF, make sure that the lock pin is blocked by the shift lock lever.

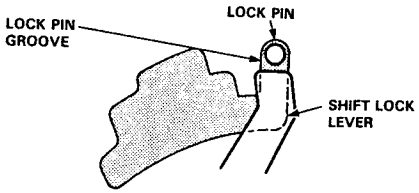

Safety Indicator

Component Location Index

CAUTION:
- All SRS electrical wiring harnesses are covered with yellow outer insulation.
- Before disconnecting the SRS wire harness, install the short connector (s) on the airbag (s).
- Replace the entire affected SRS harness assembly if it has an open circuit or damaged wiring.

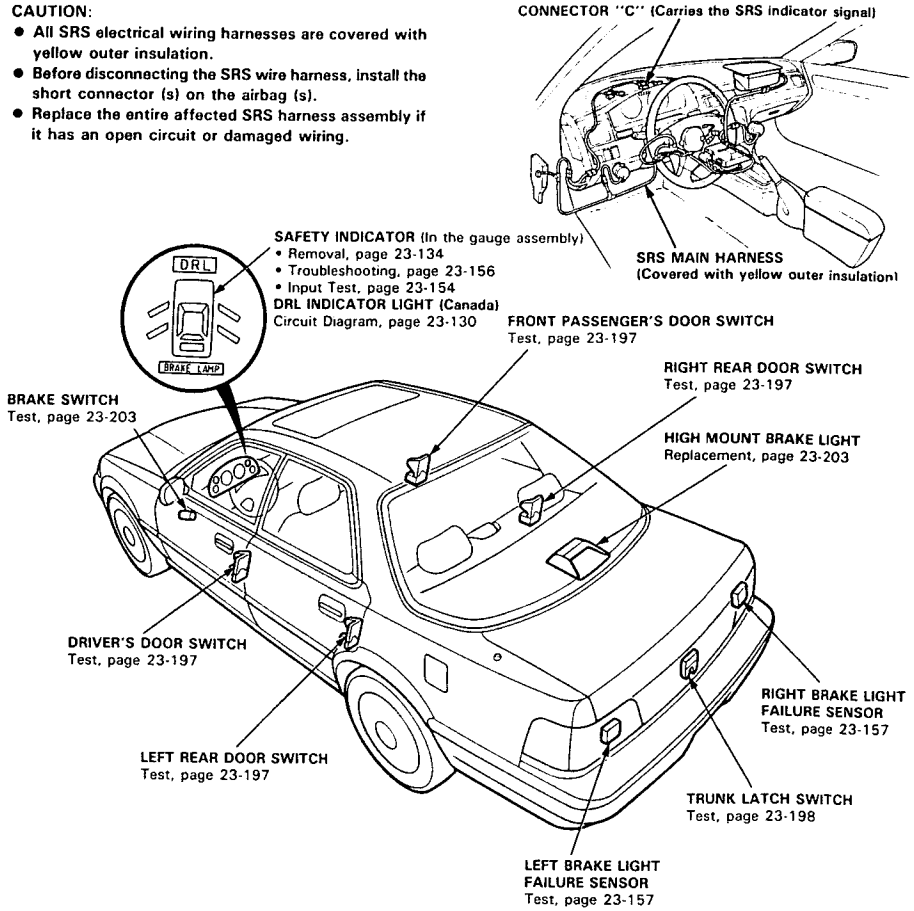

Description

Safety Indicator System:
Bulbs are used to indicate when the trunk lid or a door is not fully closed, or when a brake light is faulty. The bulbs will remain ON for about two seconds after the ignition switch has been turned ON to show that the system circuit is functioning.

Brake Light Bulb Failure Indicator:
If all brake light bulbs are OK, the indicator light stays off because the WHT/GRN wire is constantly being grounded by the two brake light failure sensors connected in series. With the brake light off, the ground is provided through the diode, the failure sensor relay coil and the bulb filaments to ground. With the brake light on, all five relays (three in the left sensor, two in the right sensor), connected in series, supply ground. If any of the four bulbs are not working, the chain is broken and the WHT/GRN wire is not being grounded. The indicator light comes on.

Circuit Diagram

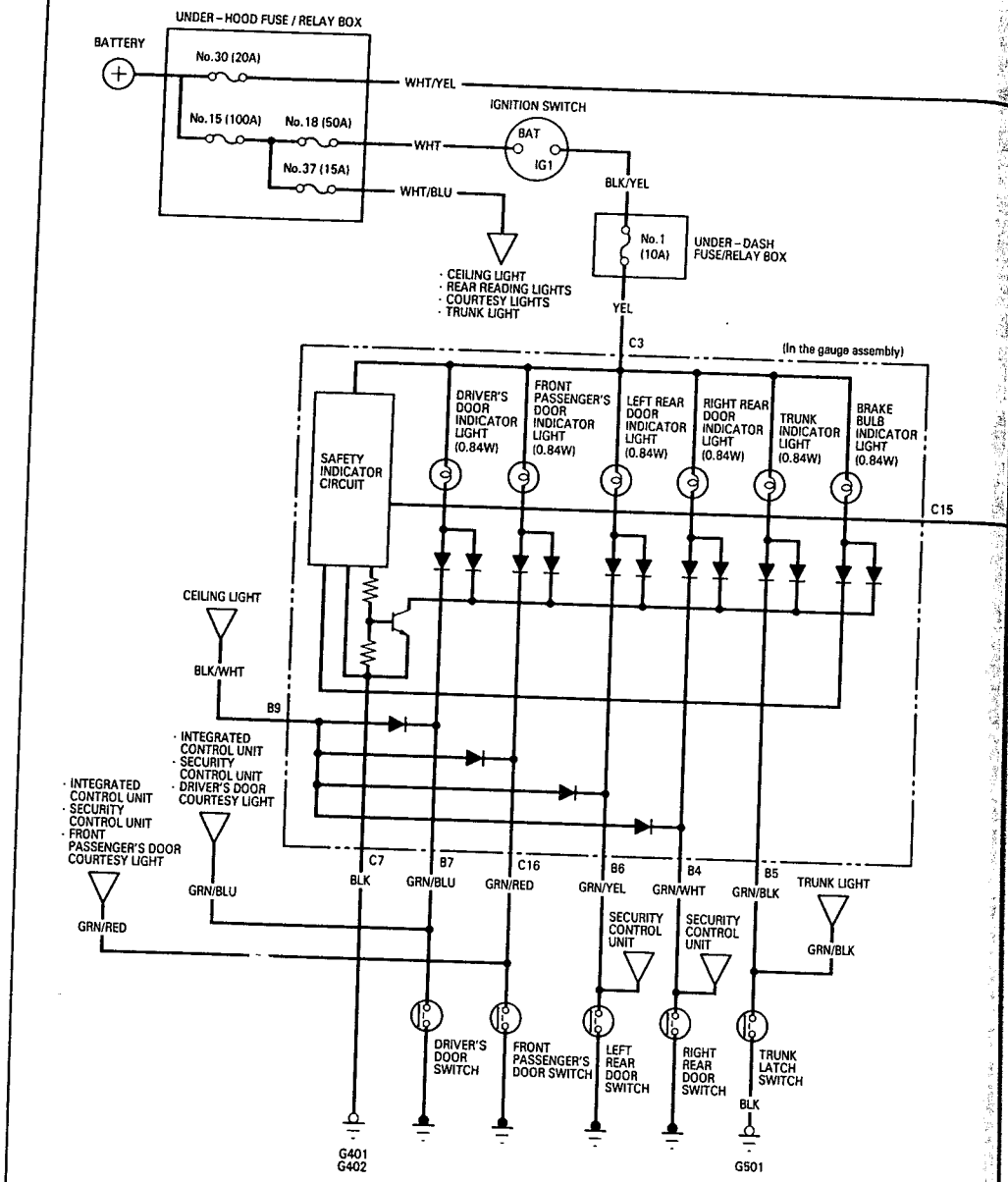

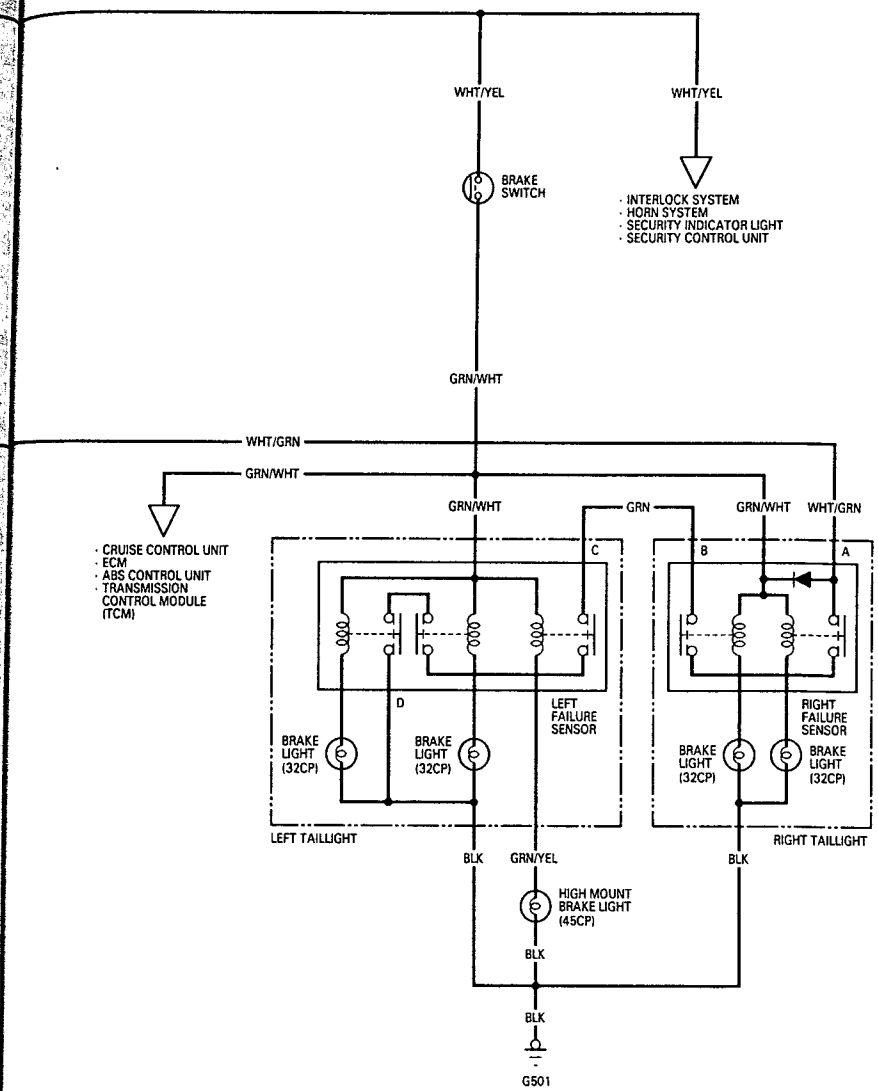

Indicator Input Test

CAUTION:
- **All SRS electrical wiring harnesses are covered with yellow outer insulation.**
- **Before disconnecting the SRS wire harness, install the short connector (s) on the airbag (s).**
- **Replace the entire affected SRS harness assembly if it has an open circuit or damaged wiring.**

Remove the gauge assembly from the dashboard (see page 23-132), and disconnect the 10-P and 16-P connectors from the gauge assembly. Inspect the connector terminals to be sure they are all making good contact.

- If the terminals are bent, loose, or corroded, repair them as necessary, and recheck the system.
- If the terminals look OK, make the following input tests at the connector terminals.
  - If any test indicates a problem, find and correct the cause, then recheck the system.
  - If all the input tests prove OK, the control unit must be faulty; replace it.

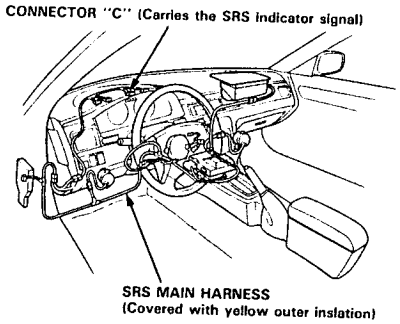

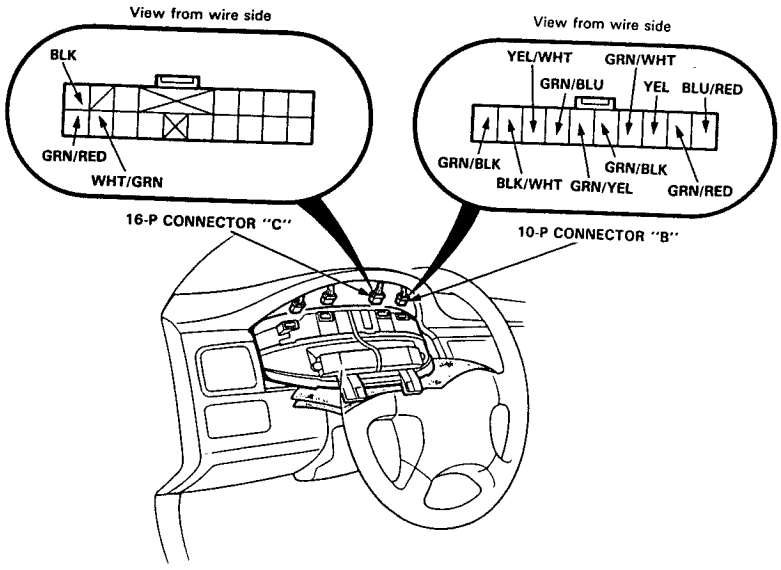

No.	Wire	Test condition	Test: Desired result	Possible cause if result is not obtained
1	BLK	Under all conditions.	Check for continuity to ground: There should be continuity.	• Poor ground (G401). • An open in the wire.
2	YEL	Ignition switch ON.	Check for voltage to ground: There should be battery voltage.	• Blown No. 1 (10 A) fuse (in the under-dash fuse/relay box). • An open in the wire.
3	WHT/GRN	Brake pedal pushed.	Check for continuity to ground: There should be less than 200 ohms with the pedal pushed.	• Blown No. 30 (20 A) fuse (in the under-hood fuse/relay box). • Faulty brake switch. • Blown brake light bulbs. • Faulty brake light failure sensors. • Poor ground (G501). • An open in the wire.
4	GRN/BLK	Trunk lid opened.	Check for continuity to ground: There should be continuity. NOTE: Before testing, remove No. 37 (15 A) fuse in the under-hood fuse/relay box.	• Faulty trunk latch switch. • An open in the wire.
5	BLK/WHT	Ceiling light switch in MIDDLE position.	Connect to ground: ceiling light should come on .	• Blown No. 37 (15 A) fuse (in the under-hood fuse/relay box). • Faulty ceiling light. • An open in the wire.
6	GRN/BLU	Driver's door opened.	Check for continuity to ground: There should be continuity. NOTE: Before testing, remove No. 37 (15 A) fuse in the under-hood fuse/relay box.	• Faulty door switch. • An open in the wire.
	GRN/RED	Front passenger's door opened.		
	GRN/YEL	Left Rear door opened.		
	GRN/WHT	Right door opened.		

Troubleshooting

NOTE: The numbers in the table show the troubleshooting sequence.

Symptom \ Item to be inspected	Blown No. 1 (10 A) fuse (In the under-dash fuse/relay box)	Blown No. 37 (15 A) fuse (In the under-hood fuse/relay box)	Safety indicator input test	Blown bulb	Brake light failure sensor	Door switch	Trunk latch switch	Poor ground	Open circuit, loose or disconnected terminals
No indicators operate.	1		2					G401 G402	YEL
Indicator panel illumination not lit with combination light switch ON.				1					RED/BLK or RED
Indicator lights do not come on when ignition switch is turned to ON.			1						
Door indicator lights do not come on with doors opened.			2			1			GRN/BLU GRN/RED GRN/YEL or GRN/WHT
Trunk indicator light does not come on with trunk lid opened.		1	3				2		GRN/BLK
Brake Indicator light does not come on with blown brake light bulb.			1						WHT/GRN or GRN
Brake Indicator light remains on with good brake light bulbs.			2		1			G501	

Bulb Replacement

Remove the sub printed circuit board "A" from the housing (see page 23-134).

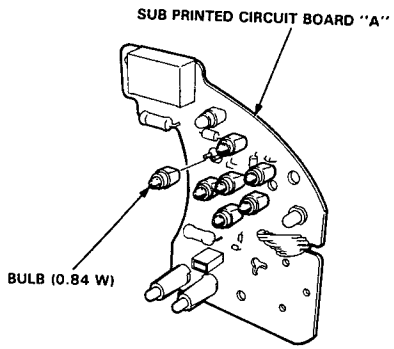

Brake Light Failure Sensor Test

1. First make sure the brake lights come on when the brake pedal is pressed.
   - If all the brake lights come on, go to step 2.
   - If one of the brake lights does not come on, check whether the bulb is blown. If the bulb is OK, go to step 2.
   - If none of the brake lights come on, check the brake light circuit (see page 23-153).
2. Open the trunk lid and the taillight access panel to the right taillight. Remove the bulb socket housing. Watch the BRAKE LAMP light in the safety indicator when the A (WHT/GRN) wire of the 6-P connector is grounded and the ignition switch is turned from OFF to ON.

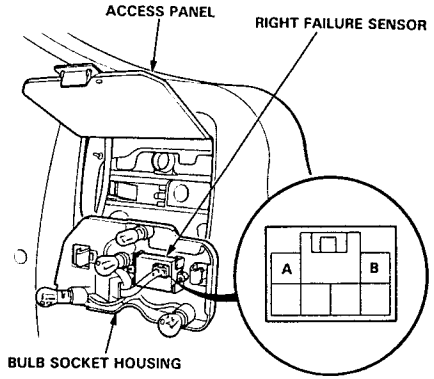

View from wire side

   - If the BRAKE LAMP light comes on and stays on, check for an open in the A (WHT/GRN) wire between the safety indicator and the right failure sensor.
   - If the BRAKE LAMP light does not stay on, go to step 3.
3. Watch the BRAKE LAMP light when the ignition switch is turned from OFF to ON with the B (GRN) wire of the 6-P connector grounded and the brake pedal pressed.
   - If the BRAKE LAMP light comes on and stays on, replace the right failure sensor.
   - If the BRAKE LAMP light does not stay on, go to step 4.
4. Open the taillight access panel to the left taillight. Remove the bulb socket housing. Watch the BRAKE LAMP light when the ignition switch is turned from OFF to ON with the C (GRN) wire of the 6-P connector grounded and the brake pedal pressed.

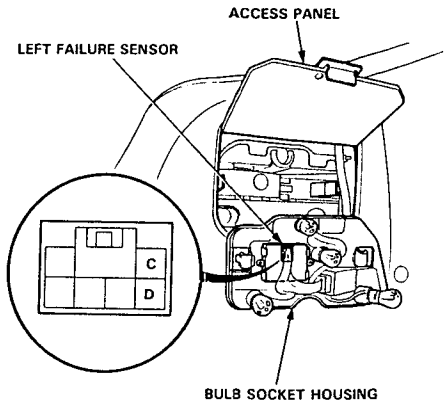

   - If the BRAKE LAMP light comes on and stays on, there is an open in the C (GRN) wire between the left failure sensor and the right failure sensor.
   - If the BRAKE LAMP light does not stay on, go to step 5.
5. Watch the BRAKE LAMP light when the ignition switch is turned from OFF to ON with the D (BLK) wire of the 6-P connector grounded and the brake pedal pressed.
   - If the BRAKE LAMP light comes on and stays on, replace the left failure sensor.
   - If the BRAKE LAMP light does not stay on, check for an open in the D (BLK) wire between the left failure sensor and ground, and check for a poor ground at G501.

Component Location Index

CAUTION:
- All SRS electrical wiring harnesses are covered with yellow outer insulation.
- Before disconnecting the SRS wire harness, install the short connector (s) on the airbag (s).
- Replace the entire affected SRS harness assembly if it has an open circuit or damaged wiring.

GAUGE ASSEMBLY
- Removal, page 23-132
- Disassembly, page 23-134

INTERLOCK SYSTEM
See page, 23-145

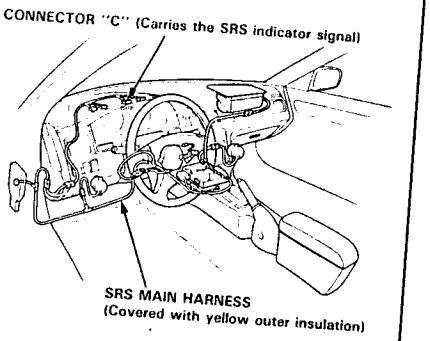

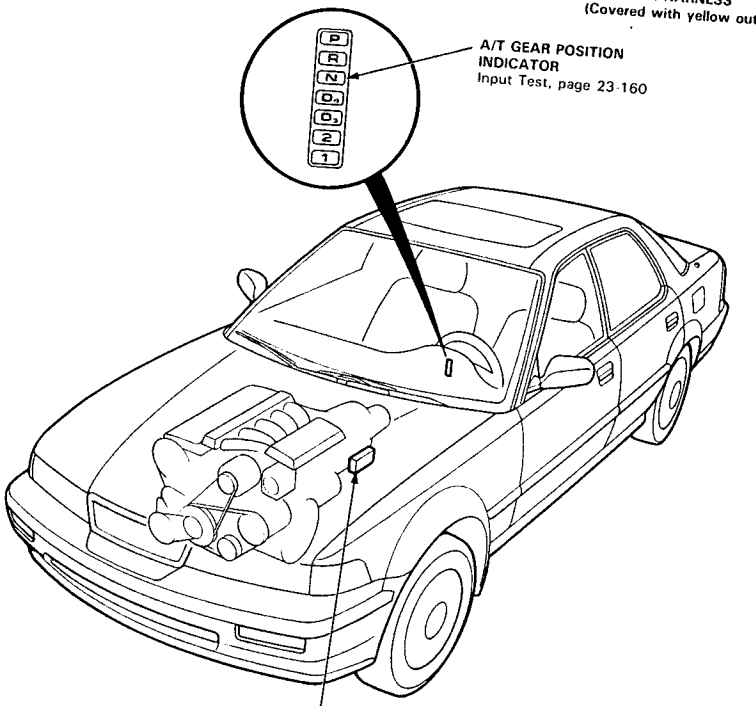

Circuit Diagram

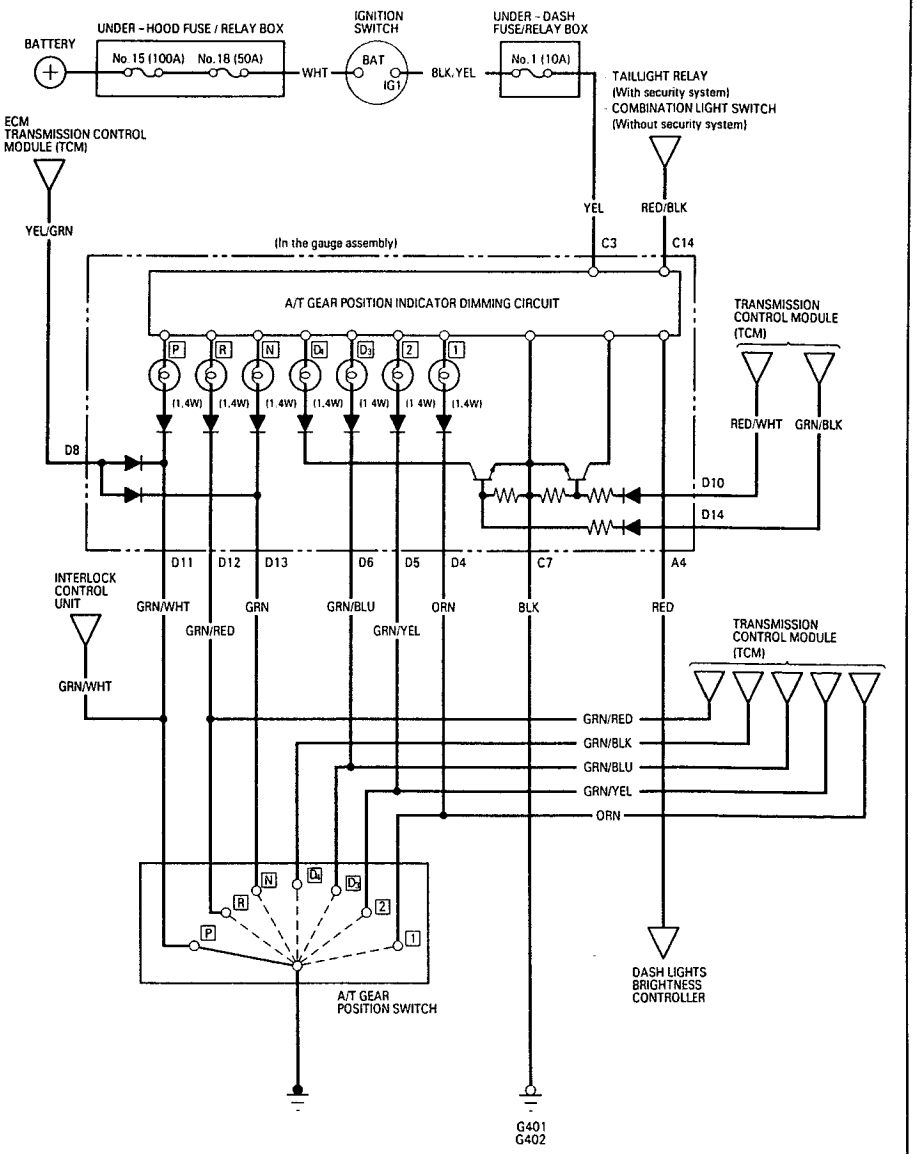

Indicator Input Test

CAUTION:
- All SRS electrical wiring harnesses are covered with yellow outer insulation.
- Before disconnecting the SRS wire harness, install the short connector (s) on the airbag (s).
- Replace the entire affected SRS harness assembly if it has an open circuit or damaged wiring.

Pry the gauge assembly out of from the dashboard (see page 23-132), and disconnect the 14-P connector from the gauge assembly. Inspect the connector terminals to be sure they are all making good contact.

- If the terminals are bent, loose or corroded, repair them as necessary, and recheck the system.
- If the terminals look OK, make the following input tests at the connector terminals.
  - If any test indicates a problem, find and correct the cause, then recheck the system.
  - If all the input tests prove OK, the gauge assembly must be faulty; replace it.

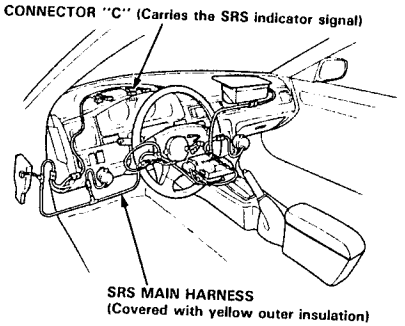

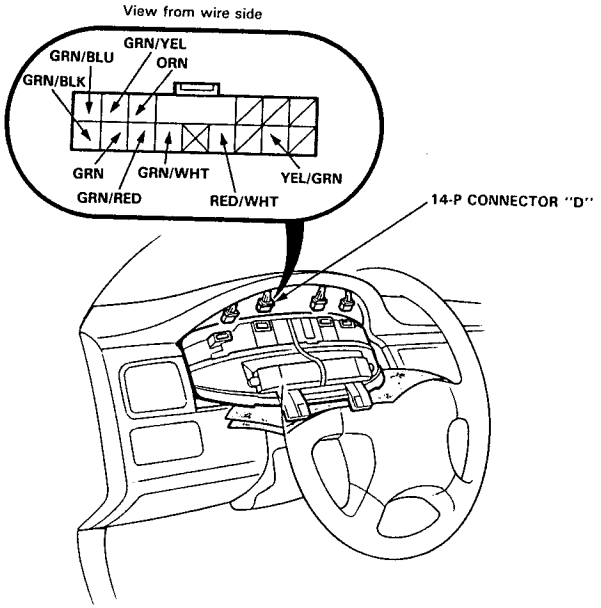

No.	Wire	Test condition	Test: Desired result	Possible cause if result is not obtained
1	BLK	Under all conditons.	Check for continuity to ground: There should be continuity.	• Poor ground (G401, G402). • An open in the wire.
2	YEL	Ignition switch ON.	Check for voltage to ground: There should be battery voltage.	• Blown No.1 (10 A) fuse (in the under-dash fuse/relay box). • An open in the wire.
3	GRN/WHT	Shift lever position in [P].	Check for continuity to ground: There should be continuity. NOTE: There should be no continuity in any other position.	• Faulty A/T gear position switch. • Poor ground. • An open in the wire.
	GRN/RED	Shift lever position in [R].		
	GRN	Shift lever position in [N].		
	GRN/BLU	Shift lever position in [D3].		
	GRN/YEL	Shift lever position in [2].		
	ORN	Shift lever position in [1].		
4	GRN/BLK	Ignition switch ON and shift lever position in [D4].	Check for voltage to ground: There should be battery voltage.	• Faulty A/T gear position switch. • Faulty Transmission control module (TCM) • Poor ground. • An open in the wire.
5	RED/BLK and RED	Combination light switch ON and dash lights brightness control dial on full bright.	Check for voltage between RED/BLK and RED terminals: There should be battery voltage.	• Faulty dash lights brightness control system. • An open in the wire.
6	GRN/BLK	Ignition switch ON and shift lever in any position except [D4].	Check for voltage to ground: There should be less than 1 V for two seconds after the ignition switch is turned ON and more than battery voltage two seconds later.	• Fauly Transmission control module (TCM). • An open in the wire.
7	RED/WHT	Ignition switch ON and shift lever in any position except [D4].	Check for voltage to ground: There should be less than 1 V for two seconds after the ignition switch is turned ON and more than 5 V two seconds later.	• Fauly Transmission control module (TCM). • An open in the wire.
8	YEL/GRN	Ignition switch ON.	Check for voltage to ground: There should be more than 5 V.	• Faulty Transmission control module (TCM) or ECM. • An open in the wire.

A/T Gear Position Indicator

A/T Gear Position Switch Test

1. Raise the car and remove the transmission splash shield (see section 14).
2. Disconnect the 14-P connector from the A/T gear position switch.
3. Check for continuity between the terminals in each switch position according to the table.
   - Move the shift lever back and forth without touching the push button at each switch position, and check for continuity within the range of free play of the shift lever.
   - If there's no continuity within the range of free play, adjust the position of the A/T gear position switch (see section 14)

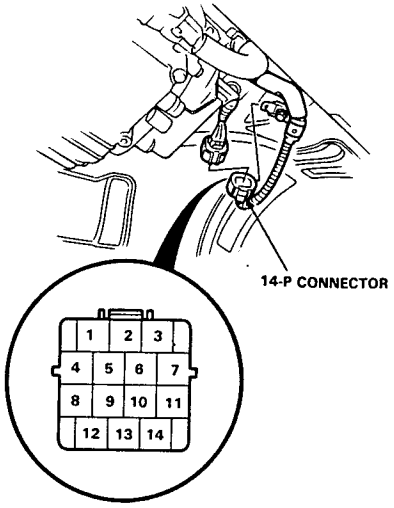

A/T Gear Position Switch										Back-up Light Switch		Neutral Position Switch	
Position \ Terminal	Body Ground	6	7	8	9	11	5	4	2	12	14	Body Ground	10
1	○				○								
2	○			○		○							
D3	○		○			○							
D4	○	○				○							
N	○						○					○	○
R	○							○		○	○		
P	○								○			○	○

Bulb Replacement

CAUTION:
- All SRS electrical wiring harnesses are covered with yellow outer insulation.
- Before disconnecting the SRS wire harness, install the short connector (s) on the airbag (s).
- Replace the entire affected SRS harness assembly if it has an open circuit or damaged wiring.

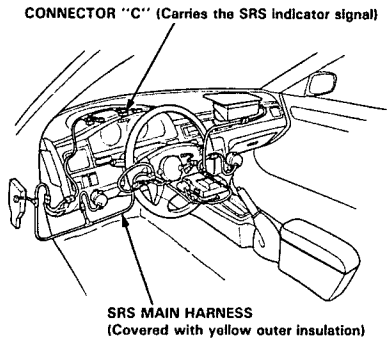

1. Remove the gauge assembly (see page 23-132).
2. Disassemble the gauge assembly (see page 23-134).
3. Remove the bulb.

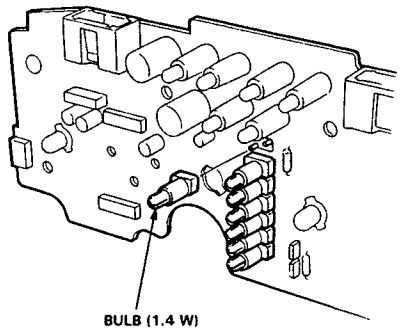

4. Installation is in the reverse order of removal.

Circuit Diagram

Description

The integrated control unit located on the left kick panel, integrates the functions of the seat belt reminder, key – in warning, side marker light flasher, wiper/washer circuit, lights – on reminder circuit, rear window defogger timer circuit, entry light timer circuit, power window key – off timer circuit, and oil pressure indicator flasher circuit onto one circuit board, sharing common circuit functions.

NOTE: Different wires with the same color have been given a number suffix to distinguish them (for example, GRN/RED [1] and GRN/RED [2] are not the same).

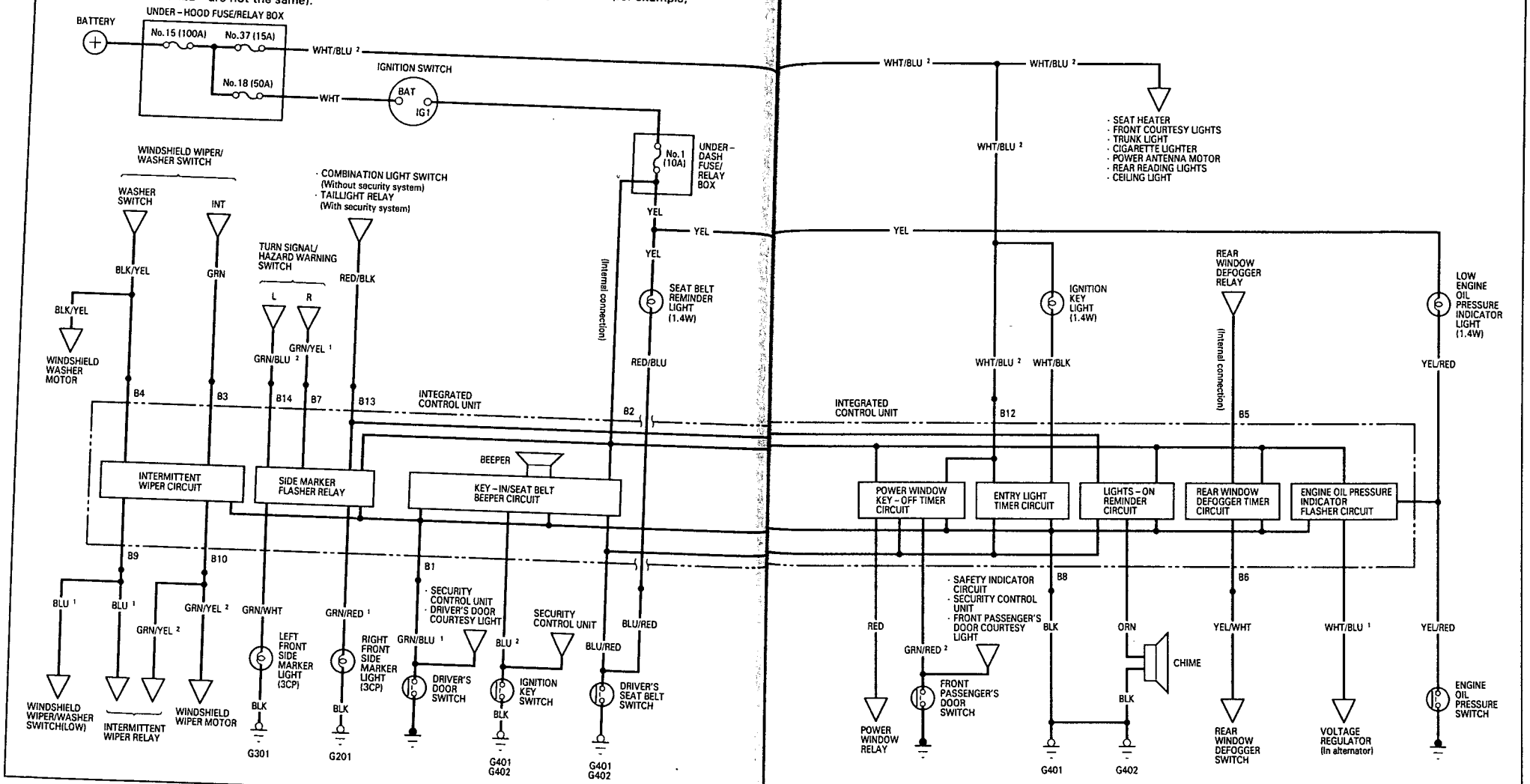

Input Test

CAUTION:
- All SRS electrical wiring harnesses are covered with yellow outer insulation.
- Before disconnecting the SRS wire harness, install the short connector (s) on the airbag (s).
- Replace the entire affected SRS harness assembly if it has an open circuit or damaged wiring.

Remove the left side kick panel cover, then disconnect the 16-P connector from the integrated control unit. Remove the integrated control unit from the under-dash fuse/relay box.

Inspect the connector terminals to be sure they are all making good contact.

- If the terminals are bent, loose or corroded, repair them as necessary, and recheck the system.
- If the terminals look OK, make the following input tests at the connector terminals.
  - If any test indicates a problem, find and correct the cause, then recheck the system.
  - If all the input tests prove OK, the control unit must be faulty; replace it.

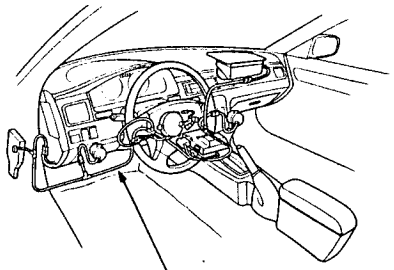

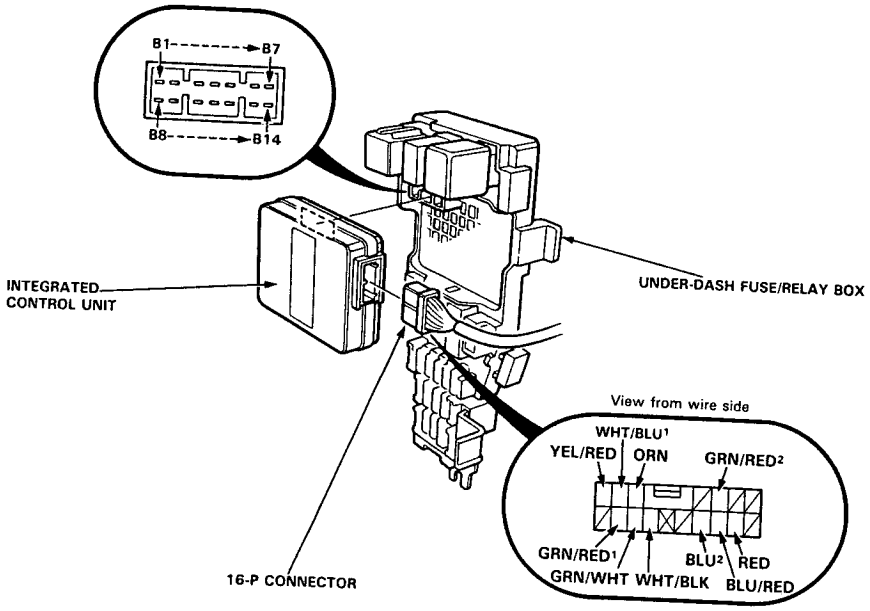

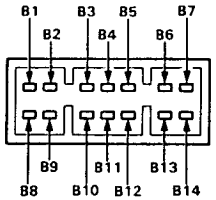

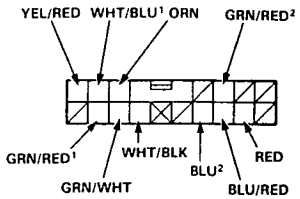

View from wire side

Intermittent Wiper System:

No.	Terminal	Test condition	Test: Desired result	Possible cause if result is not obtained
1	B8	Under all conditons.	Check for continuity to ground: There should be continuity.	• Poor ground (G401, G402). • An open in the wire.
2	B9	Wiper switch at LOW.	Check for continuity to ground: There should be continuity.	• Faulty wiper switch. • An open in the wire. • Poor ground (G401, G402).
3	B3	Ignition switch ON and wiper switch at INT.	Check for voltage to ground: There should be battery voltage.	• Blown No.1 (10 A) fuse (in the under-dash fuse/relay box). • An open in the wire
4	B4	Ignition switch ON and washer switch ON.	Check for voltage to ground: There should be battery voltage.	• Blown No.5 (10 A) fuse (in the under-dash fuse/relay box). • Faulty washer switch. • An open in the wire.
5	B10	Ignition switch ON.	Check for voltage to ground: There should be battery voltage.	• Blown No.6 (30 A) fuse (in the under-dash fuse/relay box). • An open in the wire.

Side Marker Light Flasher System:

No.	Terminal	Test condition	Test: Desired result	Possible cause if result is not obtained
1	B8	Under all conditions.	Check for continuity to ground: There should be continuity.	• Poor ground (G401, G402). • An open in the wire.
2	B2	Ignition switch ON.	Check for voltage to ground: There should be battery voltage.	• Blown No.1 (10 A) fuse (in the under-dash fuse/relay box). • An open in the wire.
3	B13	Combination light switch ON.	Check for voltage to ground: There should be battery voltage.	• Blown No. 21 (20 A) fuse (in the under-hood fuse/relay box). • Faulty combination light switch (without security system). • Faulty taillight relay (with security system). • An open in the wire.
4	B14	Ignition switch ON and turn signal switch in left turn position.	Check for voltage to ground: There should be 0-12-0-12 repeatedly.	• Blown No. 1 (10 A) fuse (in the under-dash fuse/relay box). • Faulty turn signal system. • An open in the wire.
5	B7	Ignition switch ON and turn signal switch in right turn position.		
6	GRN/WHT	Connect the B2 terminal to the GRN/WHT (or GRN/RED¹) terminal.	Check front side marker light operation: Left (or Right) front side marker light should come on as the battery is connected.	• Blown bulb • Poor ground G301 (or G201). • An open in the wire.
7	GRN/RED¹			

(cont'd)

Input Test (cont'd)

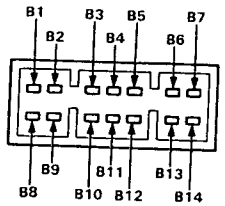

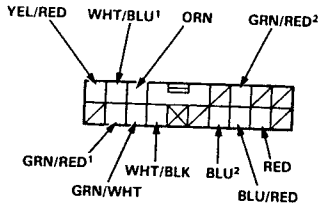

View from wire side

Seat Belt Reminder and Key-in Warning System:

No.	Terminal	Test condition	Test: Desired result	Possible cause if result is not obtained
1	B8	Under all conditons.	Check for continuity to ground: There should be continuity.	• Poor ground (G401, G402). • An open in the wire.
2	B2	Ignition switch ON.	Check for voltage to ground: There should be battery voltage.	• Blown No.1 (10 A) fuse (in the under-dash fuse/relay box). • Blown bulb. • An open in the wire.
3	B1	Driver's door opened.	Check for voltage to ground: There should be 1 V or less.	• Faulty driver's door switch. • An open in the wire
4	BLU²	Ignition key is inserted into the ignition switch.	Check for voltage to ground: There should be 1 V or less.	• Faulty ignition key switch. • An open in the wire. • Poor ground (G401, G402).
5	BLU/RED	Driver's seat belt is not buckled.	Check for voltage to ground: There should be battery voltage.	• Faulty seat belt switch. • Poor ground (G401, G402). • An open in the wire.

Power Window Key-off Timer System:

No.	Terminal	Test condition	Test: Desired result	Possible cause if result is not obtained
1	B8	Under all conditions.	Check for continuity to ground: There should be continuity.	• Poor ground (G401, G402).
2	B1	Ignition switch ON and the driver's door closed.	Check for voltage to ground: There should be battery voltage.	• Blown No.1 (10 A) fuse (in the under-dash fuse/relay box). • An open in the wire.
3	B12	Under all conditions.	Check for voltage to ground: There should be battery voltage.	• Blown No.37 (15 A) fuse (in the under-hood fuse/relay box). • An open in the wire
4	GRN/RED²	Front passenger's door opened.	Check for voltage to ground: There should be 1 V or less.	• Faulty door switch. • An open in the wire.
5	RED	Connect the B12 terminal to the RED terminal.	Check window operation: Power windows should operate as the switch is turned.	• Faulty power window relay. • Poor ground (G201). • An open in the wire.

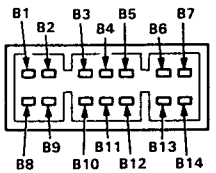

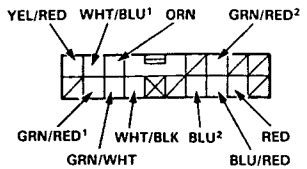

View from wire side

Entry Light Timer System

No.	Terminal	Test condition	Test: Desired result	Possible cause if result is not obtained
1	B8	Under all conditons.	Check for continuity to ground: There should be continuity.	• Poor ground (G401, G402). • An open in the wire.
2	B12	Under all conditions.	Check for voltage to ground: There should be battery voltage.	• Blown No.37 (15 A) fuse (in the under-hood fuse/relay box). • An open in the wire.
3	WHT/BLK	Under all conditions.	Attach to ground: Ignition key light should come on.	• Blown bulb. • An open in the wire
4	B1	Driver's door opened.	Check for voltage to ground: There should be 1 V or less.	• Faulty driver's door switch. • An open in the wire. • Poor ground (G401, G402).

Light-on Reminder System:

No.	Terminal	Test condition	Test: Desired result	Possible cause if result is not obtained
1	B8	Under all conditions.	Check for continuity to ground: There should be continuity.	• Poor ground (G401, G402). • An open in the wire.
2	B13	Cabination light switch ON.	Check for voltage to ground: There should be battery voltage.	• Blown No. 21 (20 A) fuse (in the under-hood fuse/relay box). • Faulty combination light switch (Without security system). • Faulty taillight relay (With security system). • An open in the wire.
3	B2	Ignition switch ON.	Check for voltage to ground: There should be battery voltage.	• Blown No.1 (10 A) fuse (in the under-dash fuse/relay box). • An open in the wire.
4	B1	Driver's door opened.	Check for voltage to ground: There should be 1 V or less.	• Faulty driver's door switch. • An open in the wire. • Poor ground (G401, G402)
5	ORN	Ignition switch ON and connect the B2 terminal to the ORN terminal.	Check chime operation: Chime should ring each time the battery is connected.	• Faulty chime. • An open in the wire.

(cont'd)

Input Test (cont'd)

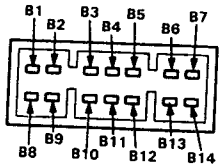

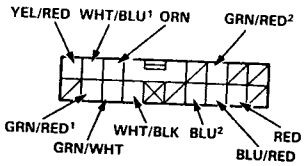

View from wire side

Rear Window Defogger Timer Circuit:

No.	Terminal	Test condition	Test: Desired result	Possible cause if result is not obtained
1	B8	Under all conditons.	Check for continuity to ground: There should be continuity.	• Poor ground (G401, G402). • An open in the wire.
2	B6	Defogger switch pushed.	Check for continuity to ground: There should be continuity as the switch is pushed.	• Faulty defogger switch. • Poor ground (G401, G402). • An open in the wire.
3	B5	Ignitioin switch ON.	Attach to ground: Rear window defogger should work and the defogger switch indicator light should come on.	• Blown No. 8 (7.5 A) fuse (in the under-dash fuse/relay box). • Faulty defogger relay. • Blown bulb. An open in the wire.
4	B2	Ignition switch ON.	Check for voltage to ground: There should be battery voltage.	• Blown No.1 (10 A) fuse (in the under-dash fuse/relay box). • An open in the wire.

Oil Pressure Indicator Flasher System:

No.	Terminal	Test condition	Test: Desired result	Possible cause if result is not obtained
1	B8	Under all conditions.	Check for continuity to ground: There should be continuity.	• Poor ground (G401, G402). • An open in the wire.
2	B12	Ignition switch ON.	Check for voltage to ground: There should be battery voltage.	• Blown No. 1 (10 A) fuse (in the under-dash fuse/relay box). • An open in the wire.
3	WHT/BLU¹	Engine running.	Check for voltage to ground: There should be 1 V or less	• Faulty charging system. • An open in the wire
4	YEL/RED	Ignition switch OFF.	Check for continuity to ground: There should be continuity.	• Faulty oil pressure switch. • An open in the wire.
		Ignition switch ON.	Check light operation. If the light does not come on, attach the YEL/RED terminal to ground: Light should come on as the ignition switch is turned ON.	• Blown bulb. • An open in the wire.
		Start the engine.	Check for voltage to ground: There should be battery voltage.	• Insufficient oil. • Improper lubrication. • Faulty oil pressure switch.

Key-in Reminder

Ignition Key Switch Test

NOTE: Refer to page 23-164 for a wiring description of the key-in beeper circuit diagram, and page 23-168 for the input test of the beeper circuit.

When the ignition key is not removed, the key-in beeper in the integrated control unit senses ground through the closed ignition key switch. When you open the driver's door, the beeper circuit senses ground through the closed door switch. With ground at the "BLU²" and "B1" terminals, the beeper sounds.

1. Remove the dashboard lower cover and knee bolster (see page 23-66).
2. Disconnect the 8-P connector from the main wire harness.

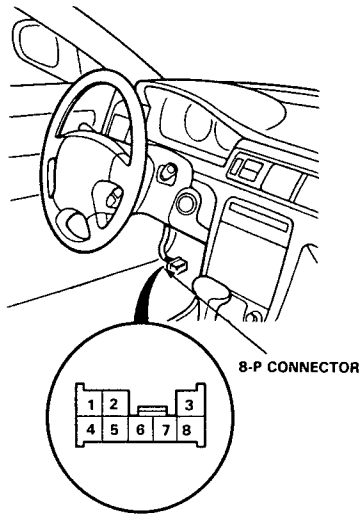

View from wire side.

3. There should be continuity between the No.7 and No.8 terminals when the ignition key is inserted in to the ignition key cylinder. There should be no continuity with the ignition key removed.

Lights-on Reminder

Chime Test

NOTE: Refer to page 23-165 for wiring description of the lights-on reminder circuit diagram, and page 23-169 for the input test of the circuit.

When the ignition key is turned to "0" position and removed, with the lights on, voltage is applied to the reminder circuit in the integrated control unit. When you open the driver's door, the circuit senses ground through the closed door switch. With voltage at the "B13" terminal, ground at the "B1" terminal and no voltage at the "B2" terminal, the chime is activated to remind the driver to turn off the lights.

1. Remove the dashboard lower cover and knee bolster (see page 23-66).
2. Disconnect the 2-P connector from the main wire harness (see page 23-66).

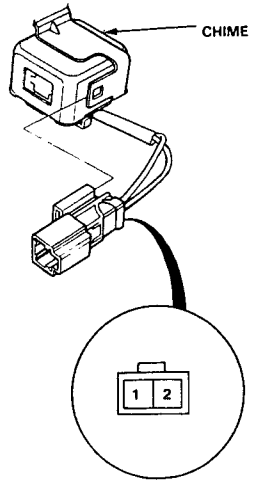

3. Test the chime operation by connecting battery power to No. 1 terminal, grounding No. 2 terminal, and cycling the power on-off repeatedly.
4. If the chime fails to sound every time power is cycled, replace it.

Read this before you do any electrical work on the car.

The VIGOR SRS includes a driver's side airbag, located in the steering wheel hub. In addition, the GS model has a front passenger's airbag located in the dashboard above the glove box. Information necessary to safely service the SRS is included in this Service Manual. Items marked with an asterisk (*) on the contents page include, or are located near, SRS components. Servicing, disassembling or replacing these items will require special precautions and tools, and should therefore be done by an authorized Acura dealer.

⚠WARNING

- **To avoid rendering the SRS inoperative, which could lead to personal injury or death in the event of a severe frontal collision, all maintenance must be performed by an authorized Acura dealer.**
- **Improper maintenance, including incorrect removal and installation of the SRS, could lead to personal injury caused by unintentional activation of the airbag (s).**
- **All SRS electrical wiring harnesses are covered with yellow outer insulation. Related components are located in the steering column, center console, dash, and dashboard lower panel, and in the dashboard above the glove box. Do not use electrical test equipment on these circuits.**

NOTE: The radio may have a coded theft protection circuit. Be sure to get the customer's code number before
– Disconnecting the battery.
– Removing the No. 39 (10 A) fuse in the under-hood fuse/relay box.
– Removing the radio.
After service, reconnect power to the radio and turn it on. When the word "CODE" is displayed, enter the customer's 5-digit code to restore radio operation.

Electrical

Special Tools 23-2
Troubleshooting
Tips and Precautions 23-3
Five-step Troubleshooting 23-5
How to Use This Section
Schematic Symbols 23-6
Wire Color Codes 23-6
Relay and Control Unit Locations
Engine Compartment 23-7
Dashboard 23-10
Seat 23-15
Trunk 23-16

Index to Circuits and Systems
Air Conditioning ..... Section 21
Anti-lock Brake System (ABS) ..... Section 19
Automatic Transmission System ..... Section 14
Battery 23-68
Blower Controls ..... Section 21
Charging System 23-110
*Cigarette Lighter 23-232
Clock 23-230
Connector Identification and Wire Harness Routing 23-17
*Cruise Control 23-290
Fuel Pump ..... Section 11
*Fuses 23-46
PGM-FI Control System ..... Section 11
*Gauges
Circuit Diagram 23-130
Engine Coolant Temperature (ECT) Gauge 23-141
Fuel Gauge 23-139
Speedometer 23-129
Tachometer 23-129
Grounds
Distribution 23-60
*Heater Controls ..... Section 21
*Horn 23-224
*Ignition Switch 23-73
Ignition System 23-98

*A/T Gear Position Indicator 23-174
*Safety Indicator 23-151
*Integrated Control Unit 23-164
*Interlock System 23-144
Lights, Exterior
Back-up Lights 23-200
Brake Lights 23-202
Daytime Running Lights (Canada) 23-176
Front Fog Light 23-175
Front Side Marker/Parking Lights 23-189
Headlights 23-198
License Plate Lights 23-191
Taillights 23-190
Lights, Interior
Ceiling Light 23-193
Courtesy Light 23-193
*Dash lights Brightness Controller 23-218
Rear Reading Light 23-193
Trunk Light 23-207
*Lighting System 23-172
Power Distribution 23-52
Power Door Locks 23-262
Power Mirrors 23-245
Power Relays 23-70
Power Seats 23-272
Power Windows 23-252
Moonroof 23-240
Radiator and Condenser Fan Controls 23-123
*Rear Window Defogger 23-235
Seat Heaters 23-276
*Side Marker/Turn Signal/Hazard Flasher System 23-208
Starting System 23-77
*Stereo Sound System 23-212
*Supplemental Restraint System (SRS) 23-323
*Under-dash Fuse/Relay Box 23-66
Vehicle Speed Sensor (VSS) 23-138
*Wiper/Washers 23-281
Wiring Diagrams 23-368

*Read SRS precautions on page 23-330, then install the short connector (s) on the airbag (s) before working in these areas.

Section 23
Part 2
Pages 23-172 thru 23-355

Sect. 23 - Electrical

Component Location Index

CAUTION:
- All SRS electrical wiring harnesses are covered with yellow outer insulation.
- Before disconnecting the SRS wire harness, install the short connector (s) on the airbag (s).
- Replace the entire affected SRS harness assembly if it has an open circuit or damaged wiring.

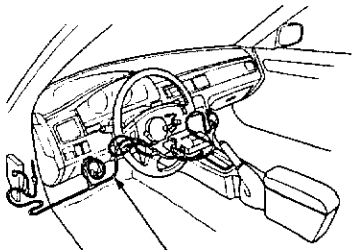

SRS MAIN HARNESS
(Covered with yellow outer insulation)

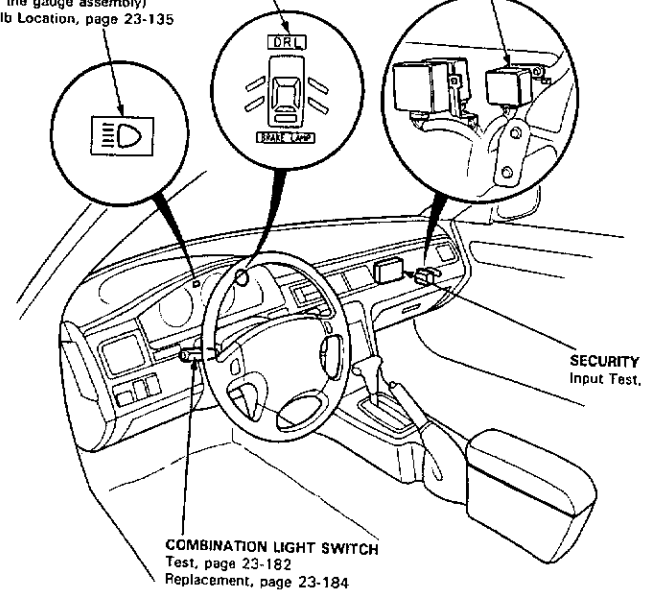

DRL INDICATOR LIGHT (Canada)
(In the gauge assembly)
Circuit Diagram, page 23-130)

DAYTIME RUNNING LIGHTS CONTROL UNIT (Canada)
Input Test, page 23-180

HIGH BEAM INDICATOR LIGHT
(In the gauge assembly)
Bulb Location, page 23-135

SECURITY CONTROL UNIT
Input Test, page 23-315

COMBINATION LIGHT SWITCH
Test, page 23-182
Replacement, page 23-184

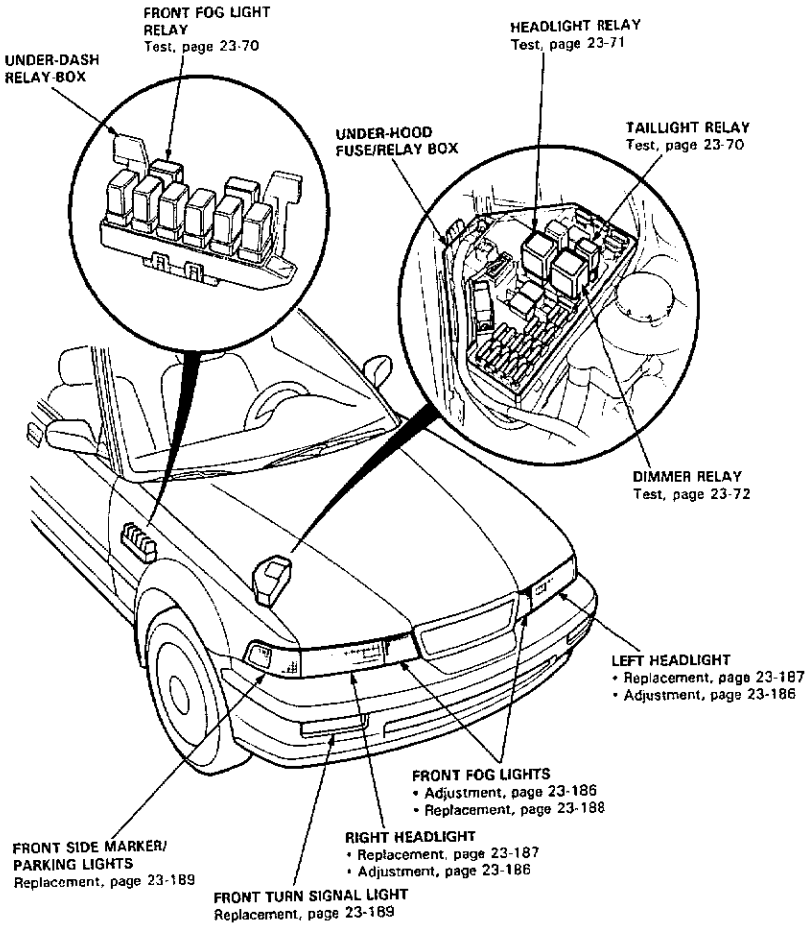

FRONT FOG LIGHT RELAY
Test, page 23-70

UNDER-DASH RELAY BOX

HEADLIGHT RELAY
Test, page 23-71

UNDER-HOOD FUSE/RELAY BOX

TAILLIGHT RELAY
Test, page 23-70

DIMMER RELAY
Test, page 23-72

LEFT HEADLIGHT
- Replacement, page 23-187
- Adjustment, page 23-186

FRONT FOG LIGHTS
- Adjustment, page 23-186
- Replacement, page 23-188

RIGHT HEADLIGHT
- Replacement, page 23-187
- Adjustment, page 23-186

FRONT SIDE MARKER/ PARKING LIGHTS
Replacement, page 23-189

FRONT TURN SIGNAL LIGHT
Replacement, page 23-189

Circuit Diagram (USA)

NOTE: Different wires with the same color have been given a number suffix to distinguish them (for example, RED/BLU[1] and RED/BLU[2] are not the same).

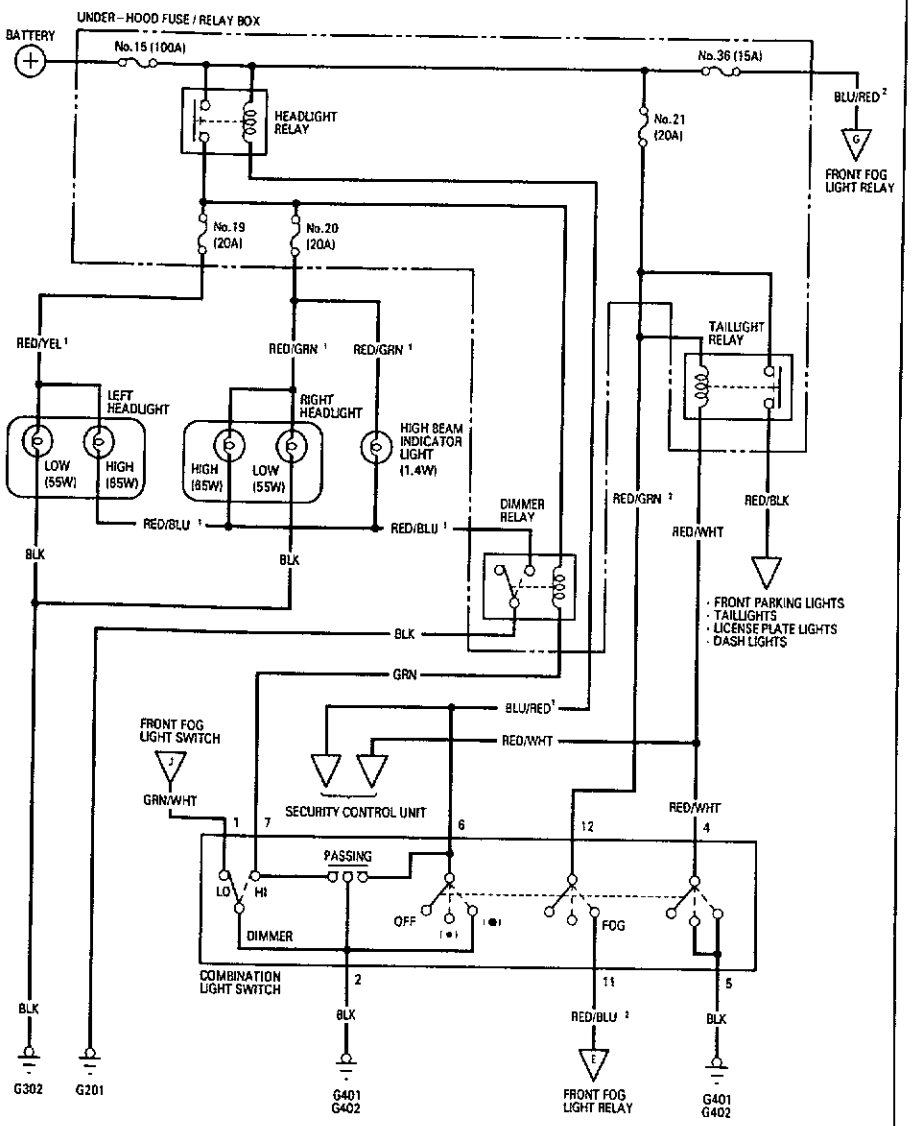

Circuit Diagram (Front Fog Light)

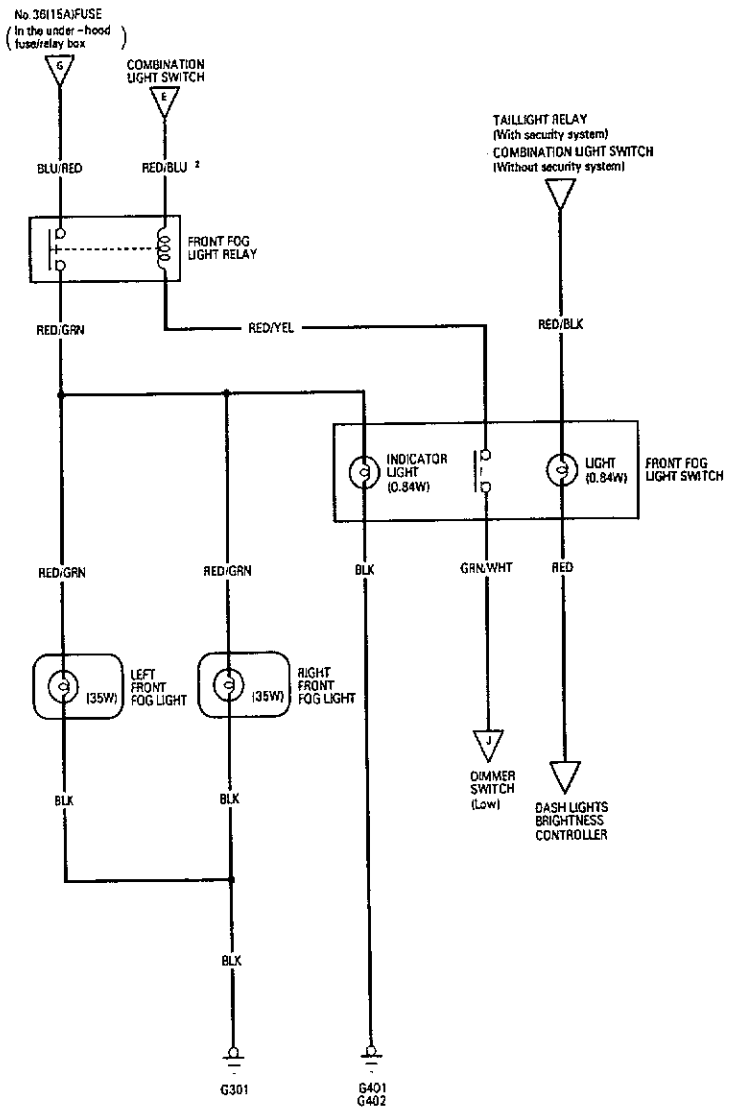

Circuit Diagram (Canada: With Security System)

NOTE: Different wires with the same color have been given a number suffix to distinguish them (for example, RED/BLU [1] and RED/BLU [2] are not the same).

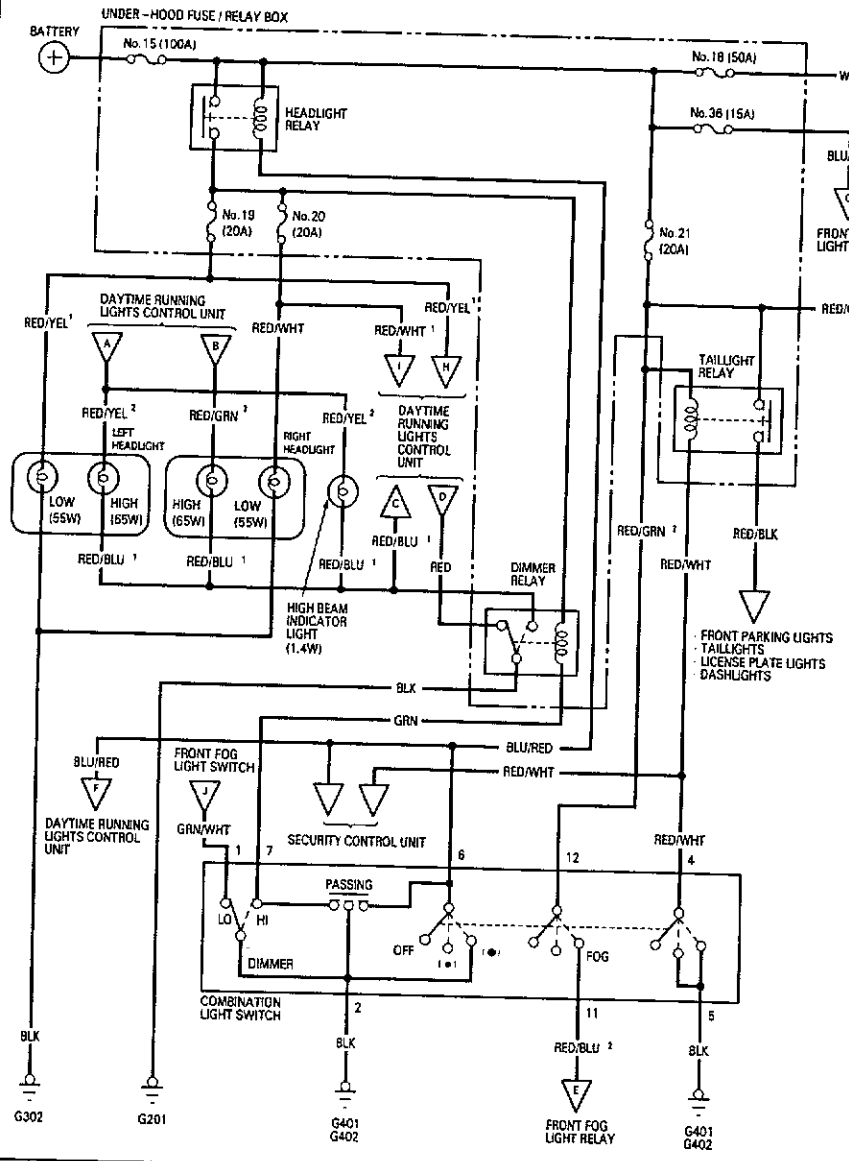

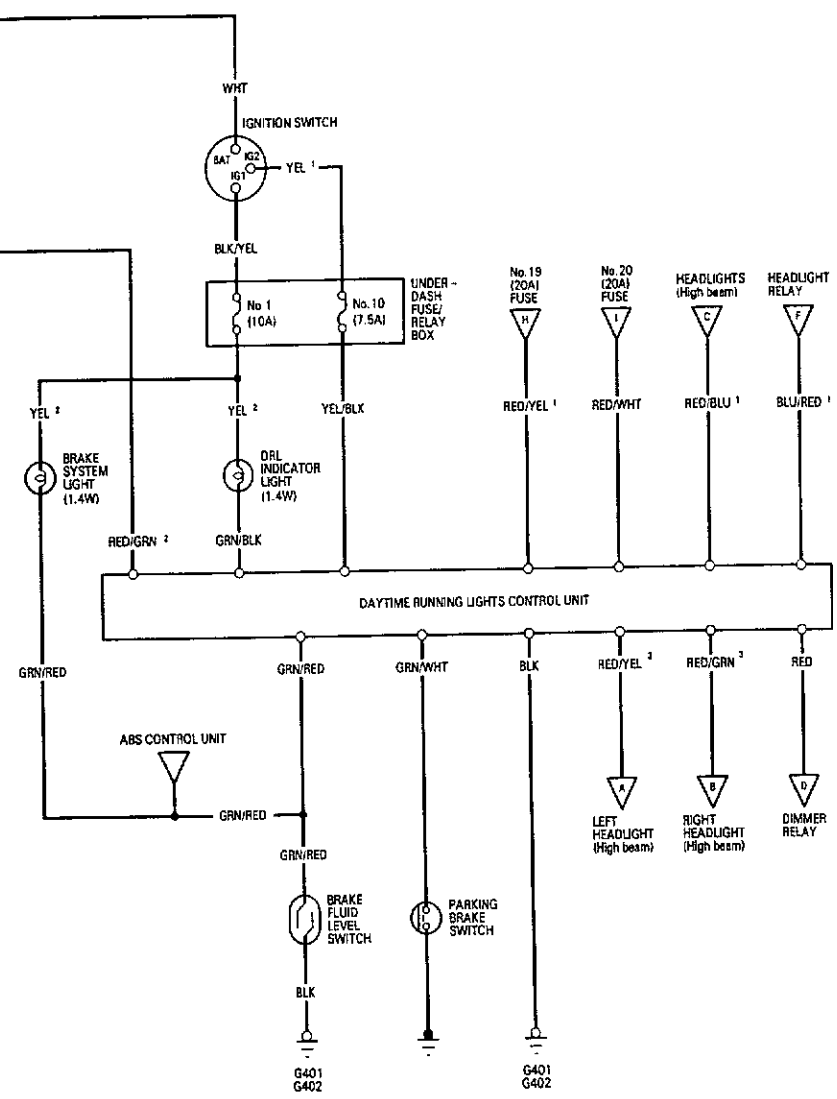

Circuit Diagram (Canada: Without Security System)

NOTE: Different wires with the same color have been given a number suffix to distinguish them (for example, RED/BLU [1] and RED/BLU [2] are not the same).

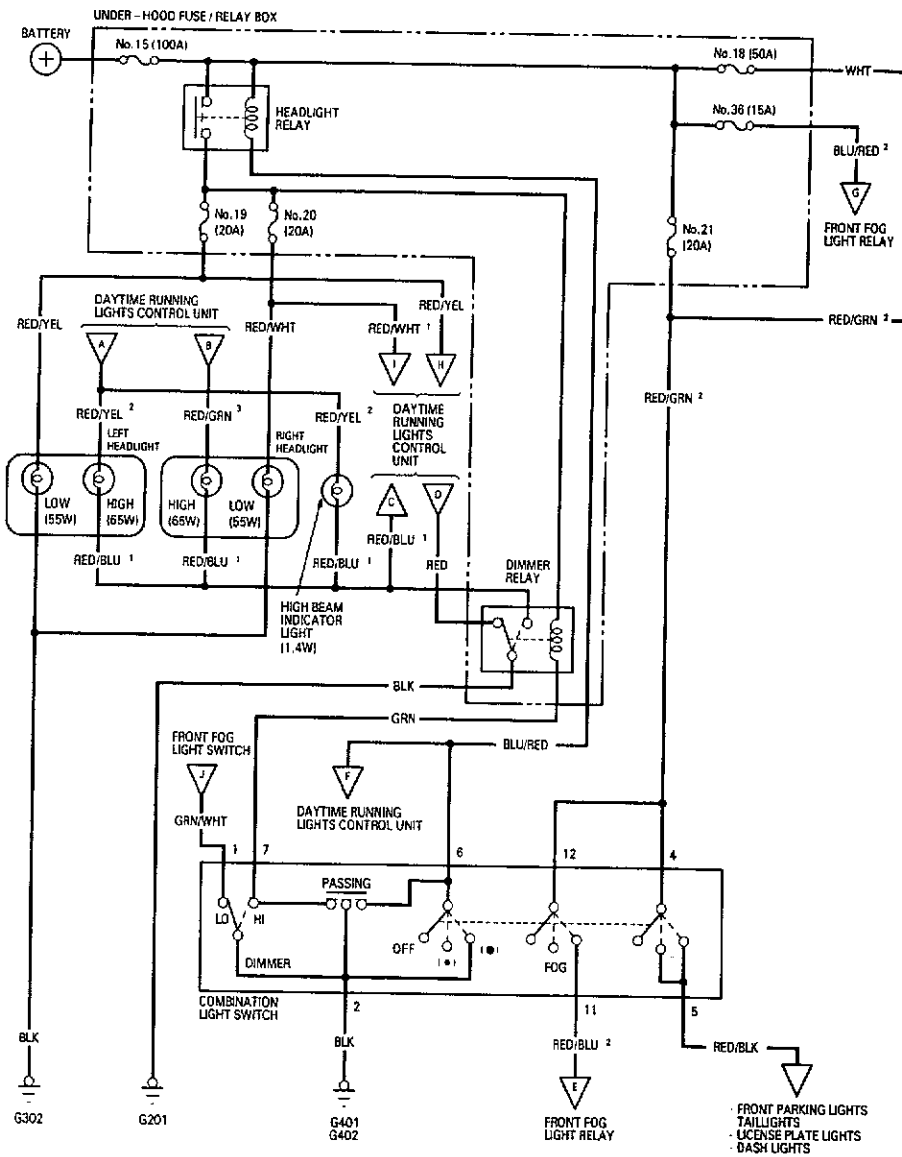

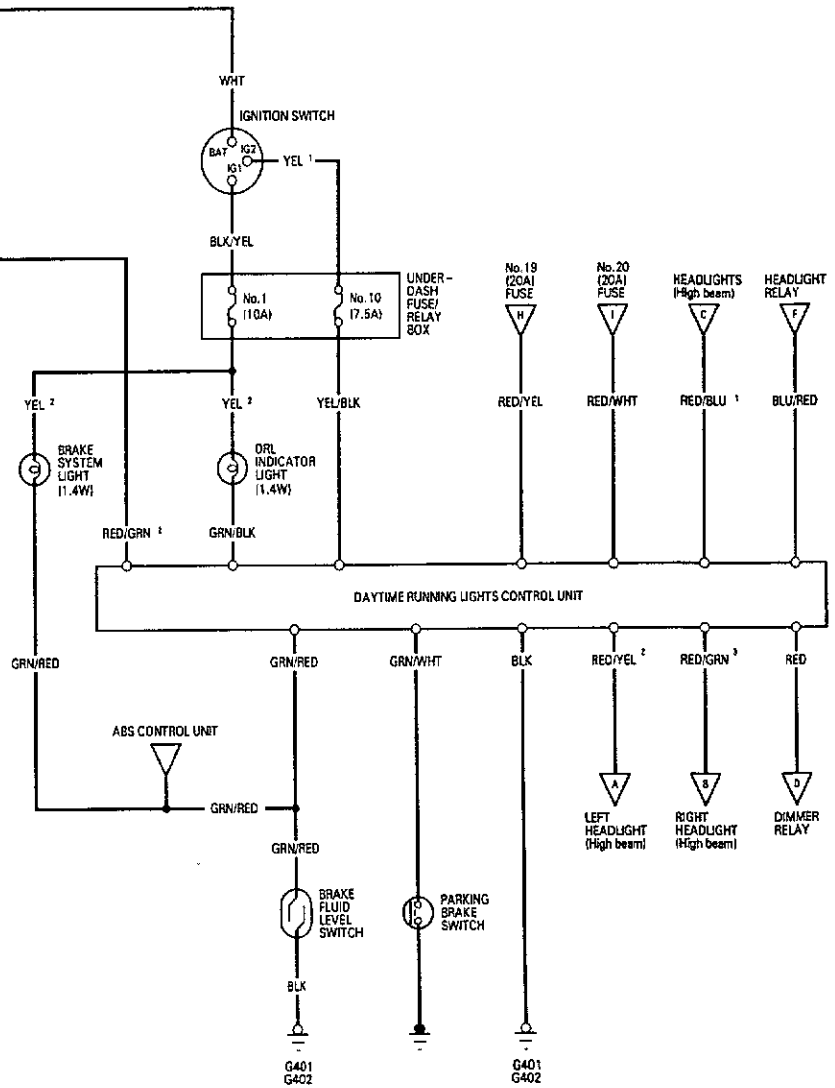

Daytime Running Lights Control Unit Input Test (Canada)

CAUTION:
- All SRS electrical wiring harnesses are covered with yellow outer insulation.
- Before disconnecting the SRS wire harness, install the short connector (s) on the airbag (s).
- Replace the entire affected SRS harness assembly if it has an open circuit or damaged wiring.

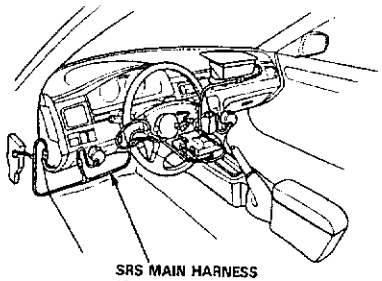

1. Remove the glove box and right kick panel cover (see section 20).
2. Disconnect the 14-P connector from the daytime running lights control unit.
3. Inspect the connector terminals to be sure they are all making good contact.
   - If the terminals are bent, loose or corroded, repair them as necessary, and recheck the system.
   - If the terminals look OK, make the following input tests at the connector terminals.
     - If any test indicates a problem, find and correct the cause, then recheck the system.
     - If all the input tests prove OK, the control unit must be faulty; replace it.

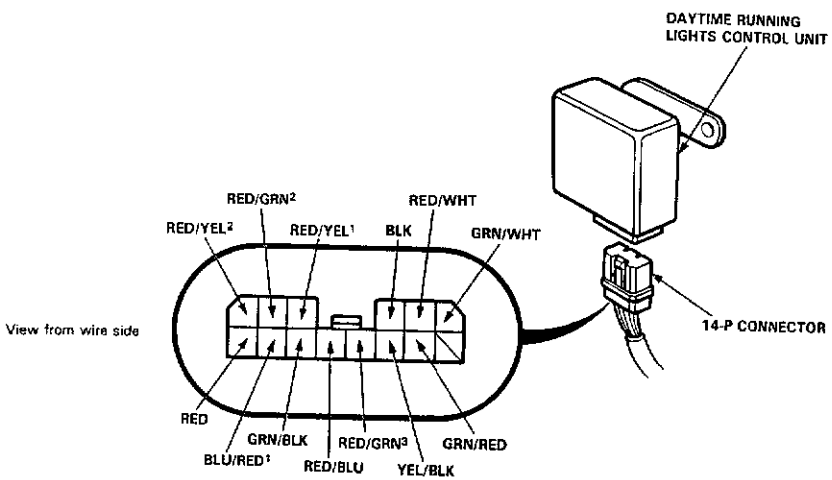

No.	Wire	Test condition	Test: Desired result	Possible cause if result is not obtained
1	BLK	Under all conditions.	Check for continuity to ground: There should be continuity.	• Poor ground (G401). • An open in the wire.
2	RED/GRN2	Under all conditions.	Check for voltage to ground: There should be battery voltage.	• Blown No. 21 (20 A) fuse (in the under-hood fuse/relay box). • An open in the wire.
3	BLU/RED1	Under all conditions.	Check for voltage to ground: There should be battery voltage.	• Faulty headlight relay. • An open in the wire.
4	RED	Combination light switch "OFF".	Check for continuity to ground: There should be continuity.	• Poor ground (G201). • Faulty dimmer relay. • An open in the wire.
5	GRN/WHT	Parking brakes switch "ON" (Parking brake lever up).	Check for voltage to ground: There should be 1 V or less.	• Faulty parling brake switch. • An open in the wire.
6	YEL/BLK	Ignition switch ON.	Check for voltage to ground: There should be battery voltage.	• Blown No 10 (7.5 A) fuse (in the under-dash fuse/relay box). • An open in the wire.
7	GRN/BLK	Ignition switch ON.	Connect to ground: DRL indicator light should come on.	• Blown No.1 (10 A) fuse (in the under-dash fuse/relay box). • Blown bulb. • An open in the wire.
8	GRN/RED	Ignition switch ON.	Connect to ground: Brake system light should come on.	• Blown NO.1 (10 A) fuse (in the under-dash fuse/relay box). • Blown bulb. • An open in the wire.
9	RED/YEL2 RED/GRN3 RED/BLU1	Under all conditions.	Check for continuity between the terminals: There should be continuity.	• Blown bulb. • An open in the wire.
10	RED/YEL1	Combinatin light switch "•" position.	Check for voltage to ground: There should be battery voltage.	• Blown No. 19 (20 A) fuse (in the under-hood fuse/relay box). • An open in the wire.
	RED/WHT			• Blown No. 20 (20 A) fuse (in the under-hood fuse/relay box). • An open in the wire.

Combination Light/Turn Signal Switch Test

CAUTION:
- All SRS electrical wiring harnesses are covered with yellow outer insulation.
- Before disconnecting the SRS wire harness, install the short connector (s) on the airbag (s).
- Replace the entire affected SRS harness assembly if it has an open circuit or damaged wiring.

1. Remove the dashboard lower cover.
2. Remove the knee bolster and dashboard lower frame.
3. Disconnect the 12-P connector from the main wire harness.
4. Check for continuity between the terminals in each switch position according to the table.

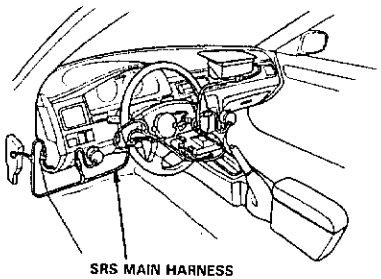

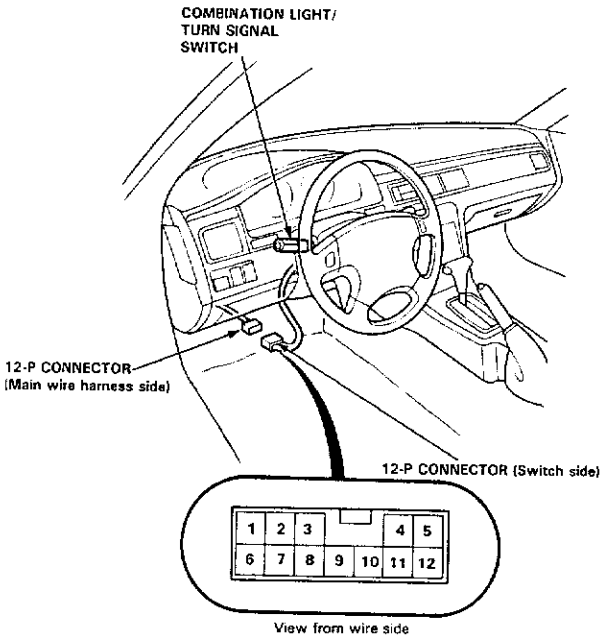

Combination Light Switch:

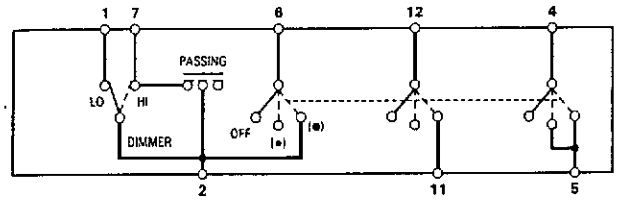

Position	Terminal	1	2	4	5	6	7	11	12
Lighting Switch	OFF	○	○						
	•			○	○				
	•		○	○	○	○		○	○
Dimmer Switch	LOW	○	○						
	HIGH		○				○		
Passing Switch	OFF								
	ON		○			○	○		

Turn Signal Switch:

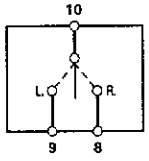

Position	Terminal	8	9	10
RIGHT		○		○
NEUTRAL				
LEFT			○	○

Combination Light Switch Replacement

CAUTION:
- All SRS electrical wiring harnesses are covered with yellow outer insulation.
- Before disconnecting the SRS wire harness, install the short connector (s) on the airbag (s).
- Replace the entire affected SRS harness assembly if it has an open circuit or damaged wiring.

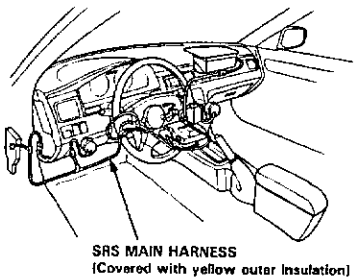

1. Remove the dashboard lower cover and knee bolster.

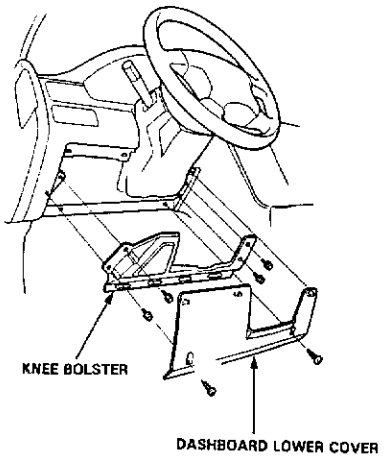

2. Remove the steering column covers.

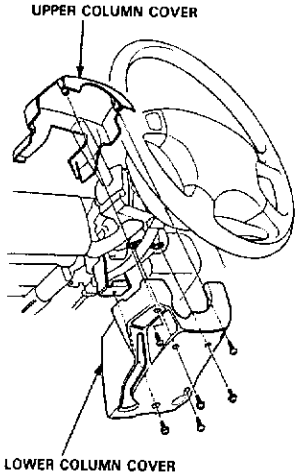

3. Disconnect the 12-P connector from the combination light switch, then remove the two screws and the switch.

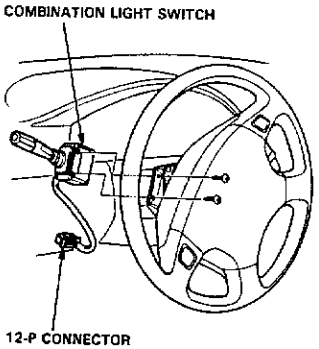

Front Fog Light Switch Test

CAUTION:
- All SRS electrical wiring harnesses are covered with yellow outer insulation.
- Before disconnecting the SRS wire harness, install the short connector (s) on the airbag (s).
- Replace the entire affected SRS harness assembly if it has an open circuit or damaged wiring.

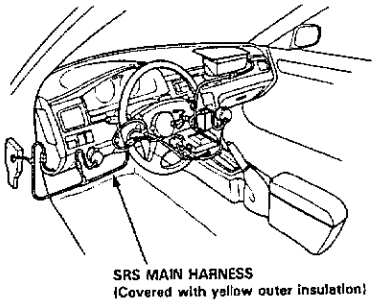

1. Remove the front fog light switch.

   NOTE: Be careful not to damage the front fog light switch and instrument panel.

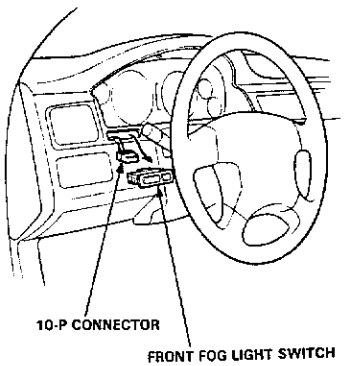

2. Check for continuity between the terminals in each switch position according to the table.

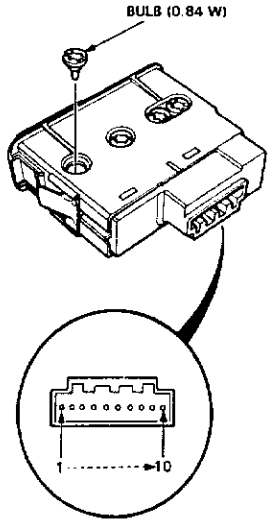

Position \ Terminal	9	10	1	4		7	8
OFF			○		○		○
ON	○	○		○	○	○	

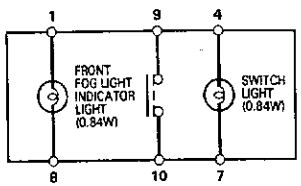

Headlights/Front Fog Lights

Adjustment

Adjust the headlights and front fog lights to local requirements.

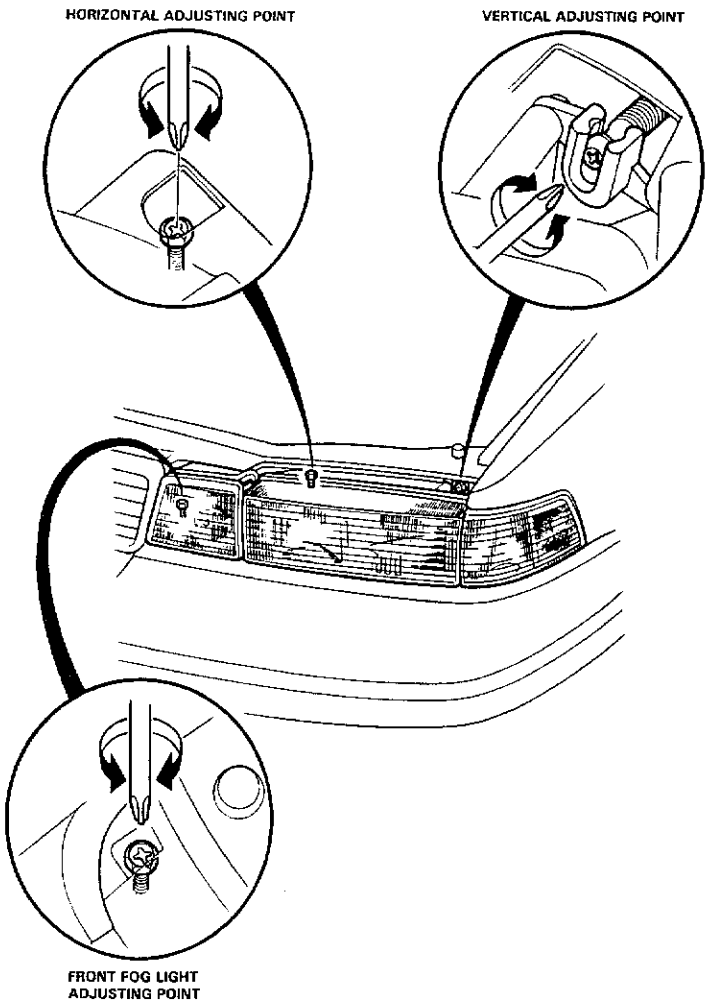

Headlight Replacement

1. Remove the front grille.

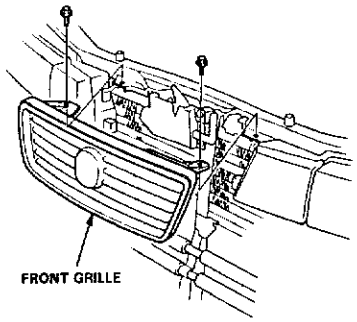

2. Remove the front side marker/parking lights.

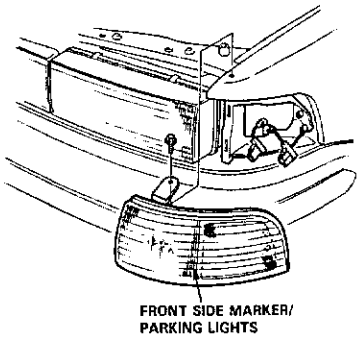

3. Remove the front bumper (see section 20).

4. Remove the five headlight mounting bolts then pull out the headlight and disconnect the connectors from it.

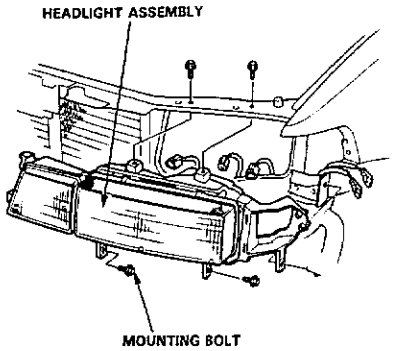

5. After replacement, adjust the headlights to local requirements.

Headlights/Front Fog Lights

Headlight Bulb Replacement

CAUTION:
- Halogen headlights can become very hot in use; do not touch them or the attaching hardware immediately after they have been turned off.
- Do not try to replace or clean the headlights with the lights on.

1. Disconnect the 2-P connectors from each bulb.
2. Turn each bulb assembly to open position, then remove it.

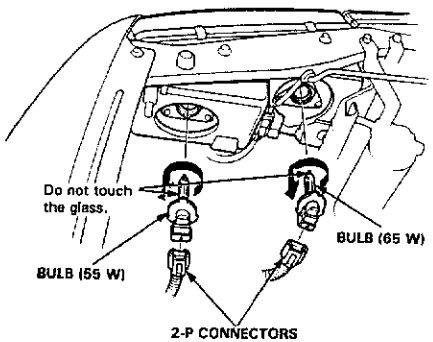

Front Fog Light Replacement

CAUTION:
- Front fog lights can become very hot in use; do not touch them or the attaching hardware immediately after they have been turned off.
- Do not try to replace or clean the front fog lights with the lights on.

1. Remove the front grille (see page 23-187).
2. Remove the three mount bolts, then pull out the front fog light assembly from the headlight.

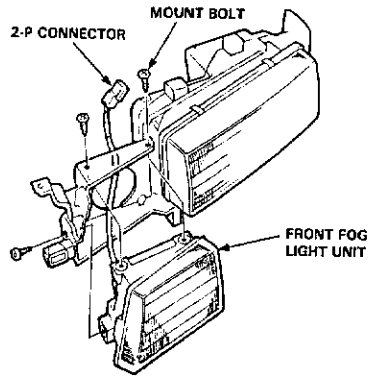

3. Disconnect the 2-P connector.
4. Remove the cover cap, then replace the bulb.

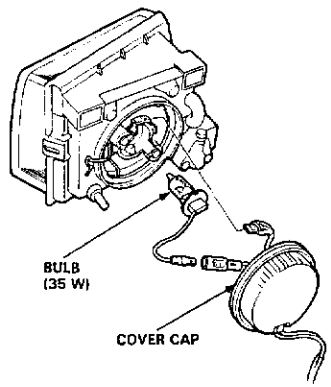

5. After replacement, adjust the front fog lights to local requirements

Front Turn Signal Lights

Replacement

1. Remove the screw and pull the light assembly out of the front bumper.

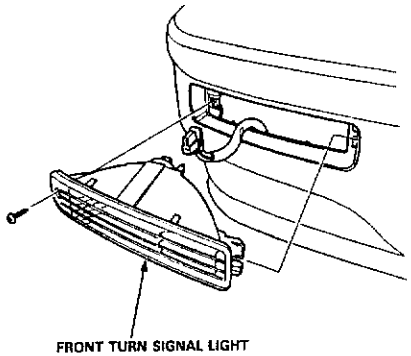

2. Turn the bulb socket 45° counterclockwise to remove it from the housing.

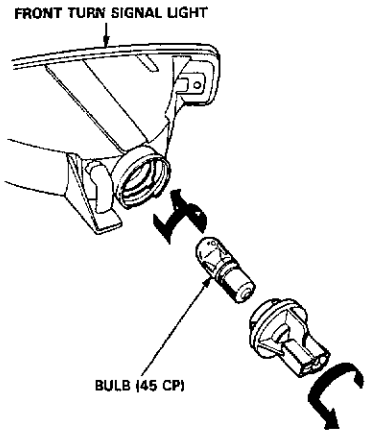

Parking Lights

Replacement

1. Remove the screw and separate the front side marker/parking lights from the headlight

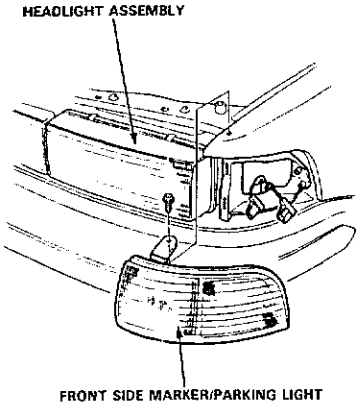

2. Turn the bulb socket 45° counterclockwise to remove it from the housing.

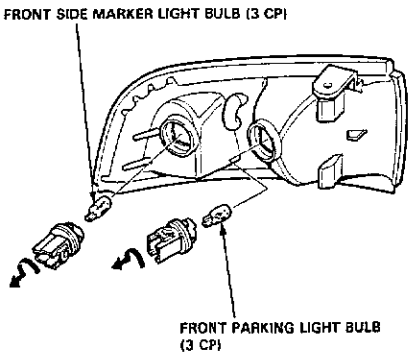

Taillights

Replacement

1. Open the trunk lid and remove the rear trim panel.

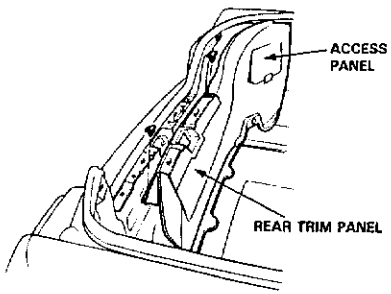

2. Disconnect the 8-P connector from the taillight assembly.
3. Remove the five mount nuts, then pull out the taillight assembly.

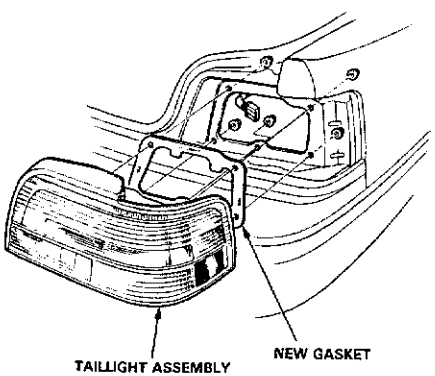

NOTE:
- Inspect the gasket; replace if it is distorted or stays compressed.
- After installation, run water over the taillights to make sure they do not leak.

Bulb Replacement

1. Open the trunk lid and remove the access panel
2. Remove the bulb from the bulb housing.

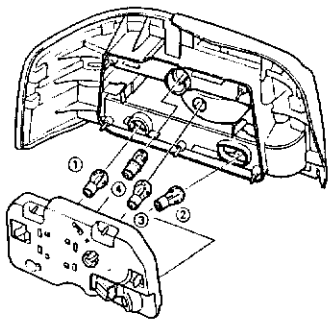

①: BRAKE LIGHT/TAILLIGHT BULB (32 CP/3 CP)

②: BRAKE LIGHT/TAILLIGHT BULB (32 CP/3 CP)

③: BACK-UP LIGHT BULB (32 CP)

④: TURN SIGNAL LIGHT BULB (45 CP)

License Plate Lights

Replacement

1. Remove the four screws and disconnect the 4-P connector.

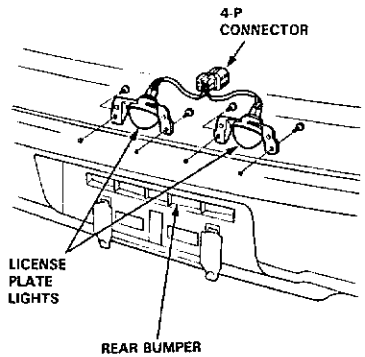

2. Turn the bulb socket 45° counterclockwise to remove it from the housing.

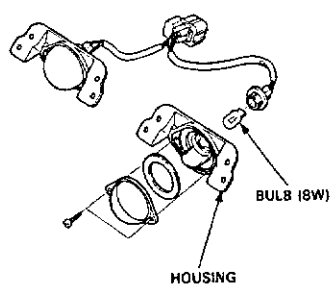

3. If necessary, separate the lens from the housing by removing the two screws.

Glove Box Light

Test

1. Open the glove box and disconnect the 2-P connector.

   NOTE: If necessary, remove the glove box.

2. There should be continuity between the A and B terminals with a bulb installed. There should be no continuity when the switch is pushed.

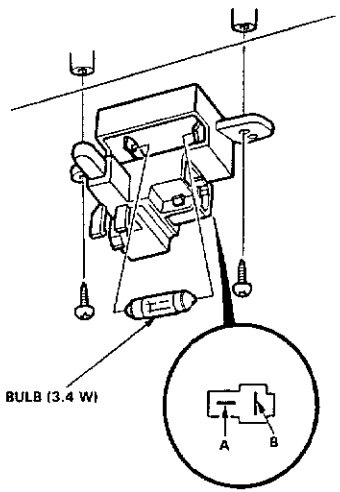

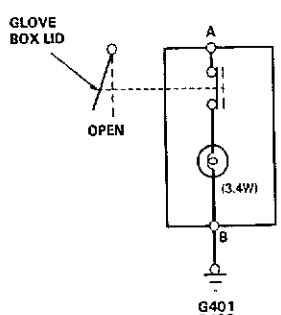

Vanity Mirror Lights

Test

1. Remove the two screws from the sunvisor bracket.
2. Disconnect the connector and remove the sunvisor.

   NOTE: Passenger's vanity mirror is shown, driver's vanity mirror is similar.

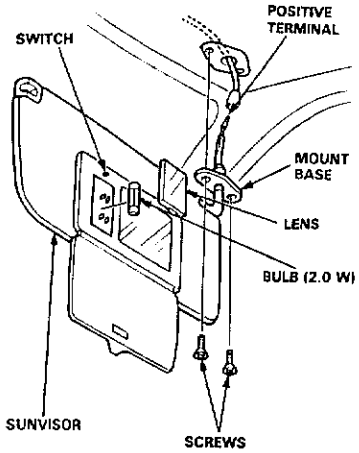

3. There should be continuity between the positive terminal and mount base (ground) with the mirror cover open and bulb installed. There should be no continuity when the mirror cover is closed.
4. If necessary, pry off the lens and replace the bulb.

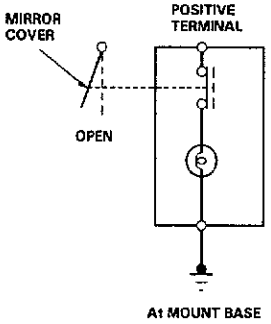

Ceiling/Reading/Courtesy/Trunk Lights

Component Location Index

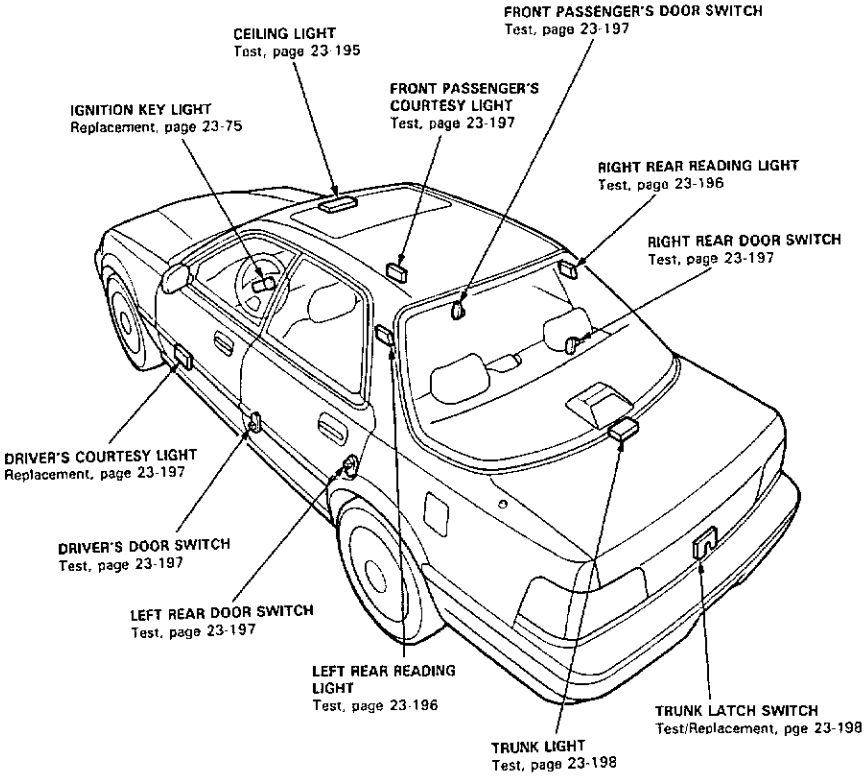

Circuit Diagram

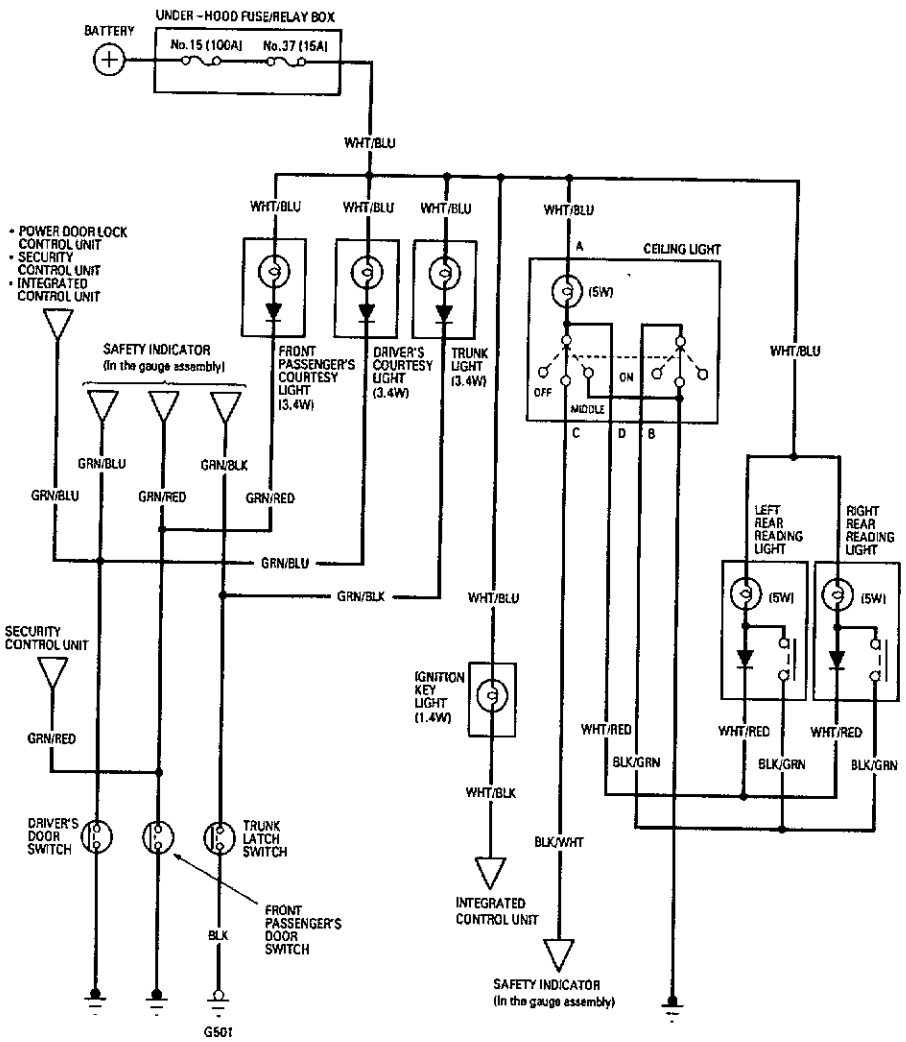

Ceiling Light Test/Replacement

1. Turn the light switch OFF.
2. Pry off the lens.
3. Remove the two bolts and the housing.
4. Disconnect the 4-P connector from the housing.

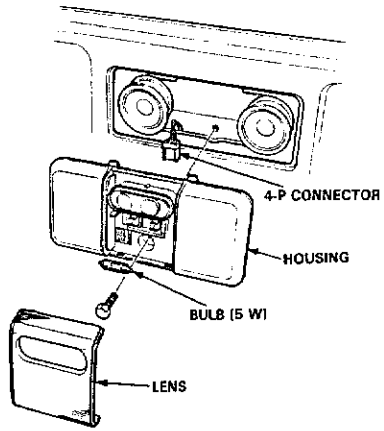

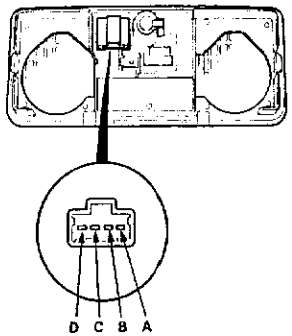

5. Check for continuity between the terminals in each switch position according to the table.

Terminal / Position	A		D	C	B
OFF	○	⊖	○		
MIDDLE	○	⊖	○	○	
ON	○	⊖	○		

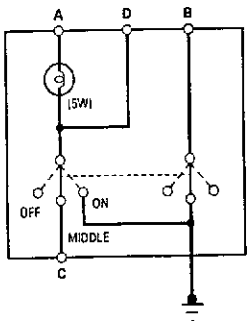

Rear Reading Light Test/Replacement

1. Turn the front ceiling light switch OFF.
2. Pry out the rear reading light.

   NOTE: Be careful not to damage the C-pillar trim panel.
3. Disconnect the 3-P connector from the housing.

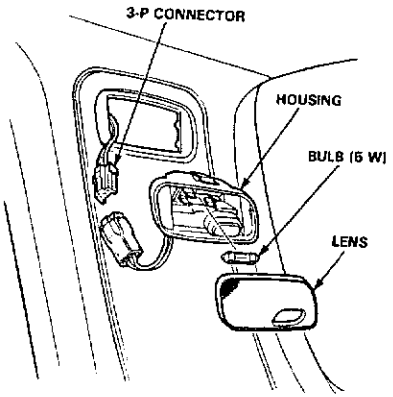

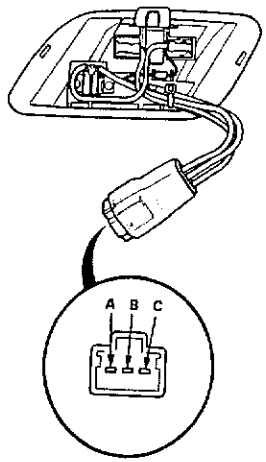

View from terminal side

4. Check for continuity between the terminals in each switch position according to the table.

Terminal / Position	C		A		B
OFF	○	⊖		▶	○
ON	○	⊖	○	▶	○

From No.37 (15A) FUSE
(Under-hood fuse/relay box)

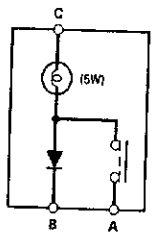

Courtesy Lights Replacement

NOTE: The bulb or lens alone can be replaced without removing the door panel.

1. To replace the entire light, remove the door panel (see section 20).
2. Remove the two screws and the retainer plate, and remove the light housing from the door panel.
3. Disconnect the 2-P connector and remove the light.

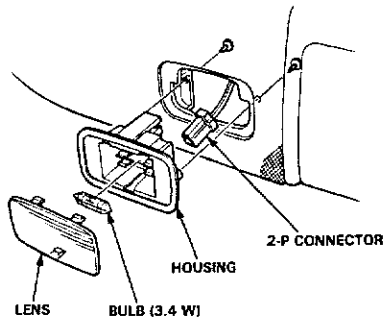

From No.37 (15A) FUSE
(Under-hood fuse/relay box)

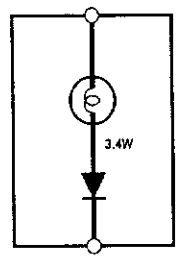

To DOOR SWITCH

Door Switch Test

1. Remove the screw, and pull the switch out.
2. Disconnect the 1-P connector and remove the switch.

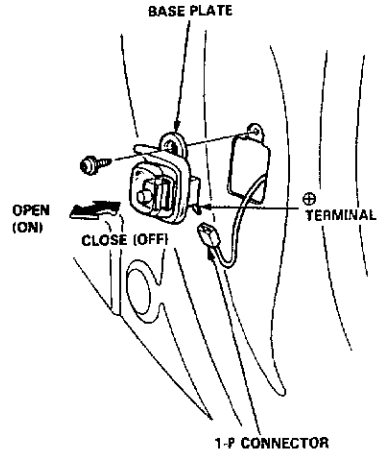

3. Check for continuity between the terminals in each switch position according to the table.

Terminal / Position	⊕ TERMINAL	BASE PLATE
CLOSE		
OPEN	○	○

Trunk Light Test/Replacement

1. Pry off the trunk light lens from the housing.
2. Pry out the light assembly.
3. Disconnect the 2-P connector from the housing.
4. Make sure that the bulb is OK. Check for continuity between A (+) and B (−) terminals.

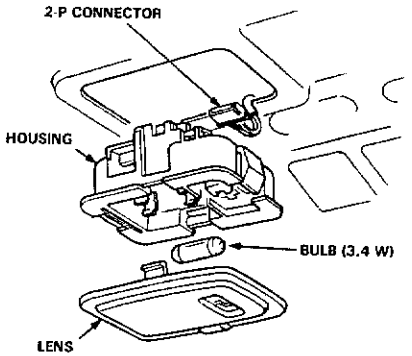

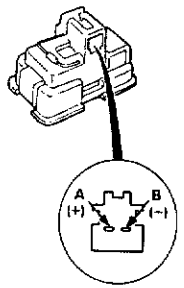

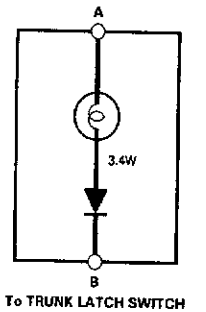

Latch Switch Test/Replacement

1. Open the trunk lid and remove the trunk rear trim panel.
2. Disconnect the 2-P connector from the trunk latch.
3. Check for continuity between the terminals in each switch position according to the table.

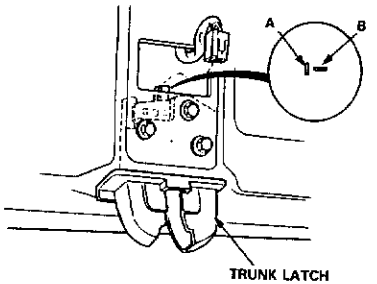

Position \ Terminal	A	B
OPEN	○	○
CLOSE		

4. If necessary, remove the three bolts from the trunk lid, then remove the trunk latch assembly. The switch cannot be replaced separately.

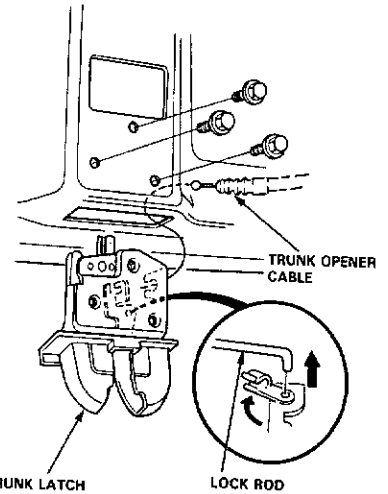

Back – up Lights

Circuit Diagram

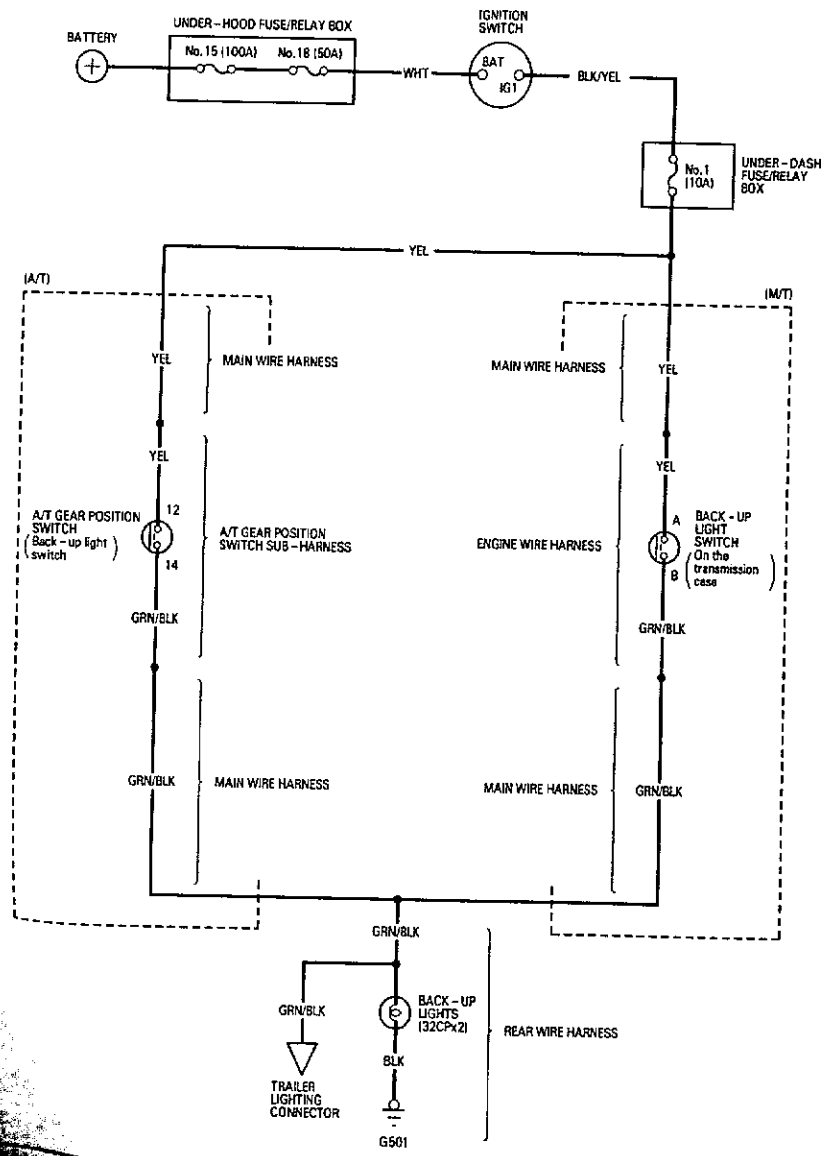

Test

Manual Transmission:
NOTE: Check the No.1 (10A) fuse in the under-dash fuse/relay box before testing.

1. Test the back-up light switch by placing the shift lever in reverse and turning the ignition switch to ON.
2. If the back-up lights do not go on, check the back-up light bulbs in the taillight assembly.
3. If the fuse and bulbs are OK, disconnect the connector from the back-up light switch.

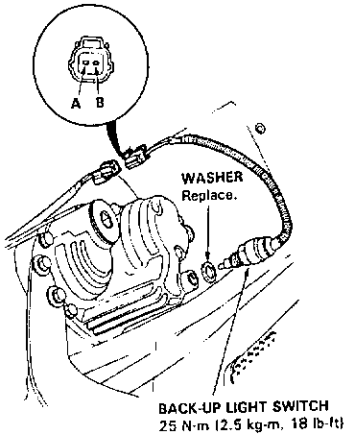

4. Check for continuity between the terminals in each switch position according to the table.

Position \ Terminal	A	B
REVERSE	○	○
ALL EXCEPT REVERSE		

- If there is no continuity, replace the back-up light switch.
- If there is continuity, but the back-up lights do not go on, check for:
  - Poor ground (G501).
  - An open in the YEL or GRN/BLK wire.

Automatic Transmission:
NOTE: Check the No.1 (10A) fuse in the under-dash fuse/relay box before testing.

1. Test the back-up light switch by shifting the shift lever to [R] and turning the ignition switch ON (II).
2. If the back-up lights do not go on, check the back-up light bulbs in the taillight assembly.
3. If the fuse and bulbs are OK, disconnect the 14-P connector from the A/T gear position switch (back-up light switch).

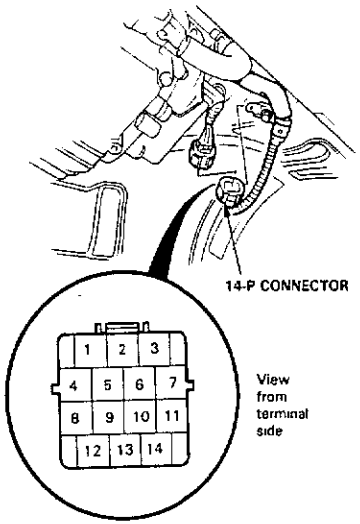

4. Check for continuity between the No.12 and No.14 terminals. Move the lever back and forth at the [R] position without touching the push button, and check for continuity within the range of free play of the shift lever.

- If there is no continuity within the range of free play, adjust the A/T gear position switch (see section 14).
- If there is continuity, but the back-up lights do not go on, check for:
  - Poor ground (G501).
  - An open in the YEL or GRN/BLK wire

Brake/High Mount Brake Light

Circuit Diagram

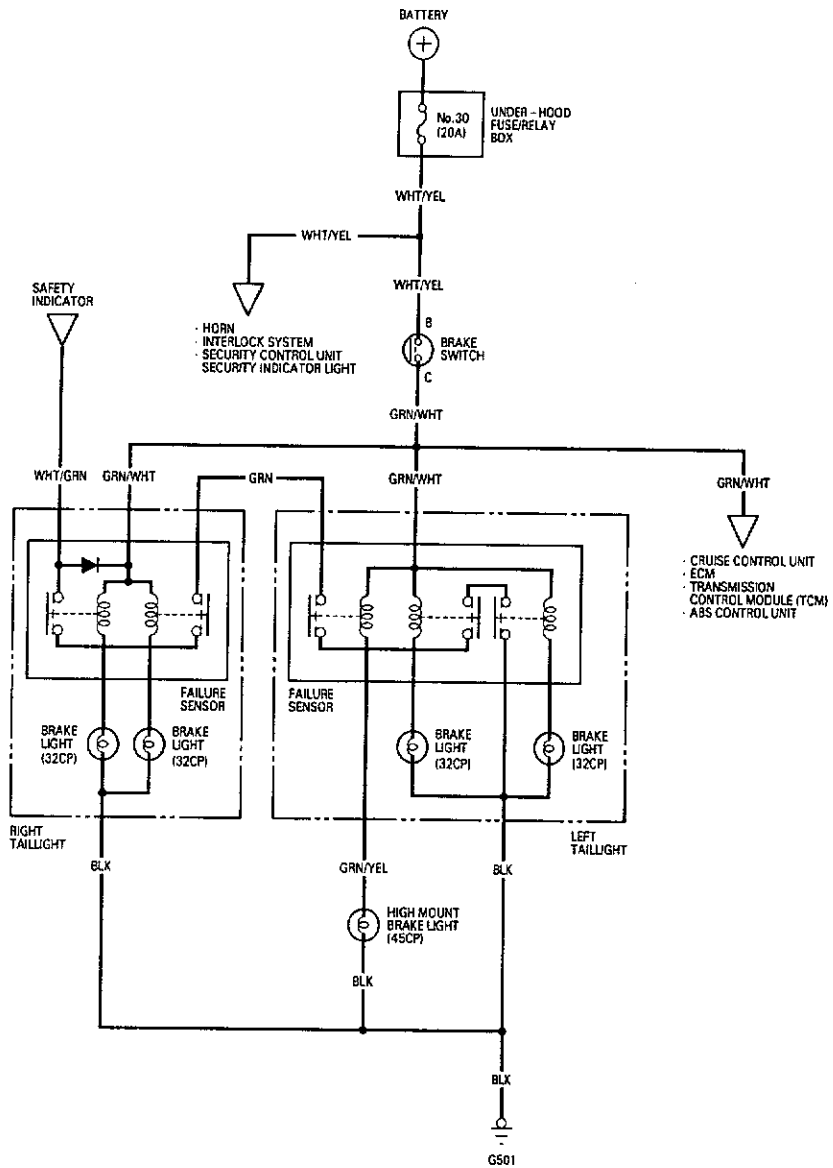

Brake Switch Test

1. If the brake lights do not go on, check the No.30 (20A) fuse in the under hood fuse/relay box, and the brake light bulbs in the taillight assembly and high mount brake light.
2. If the fuse and bulbs are OK, disconnect the 4-P connector from the brake switch

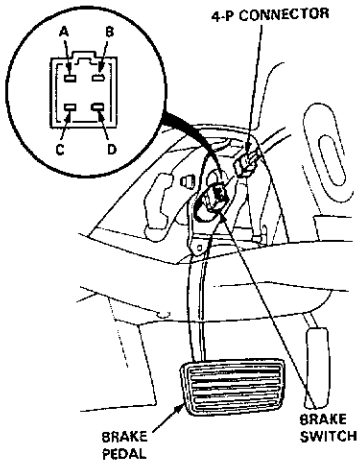

3. Check for continuity between the B and C terminals. There should be continuity with the brake pedal pushed.
   - If there is no continuity, replace the brake switch or adjust pedal height (see section 19).
   - If there is continuity, but the brake lights do not go on, inspect for:
     - Poor ground (G501).
     - An open in the WHT/GRN or GRN/WHT wire.
     - Faulty brake light failure sensors (see page 23-157).

High Mount Brake Light Replacement

1. Remove the rear shelf panel (see section 20)
2. Open the trunk lid and disconnect the 2 P connector from the high mount brake light
3. Remove the two nuts, then remove the high mount brake light from the rear shelf.

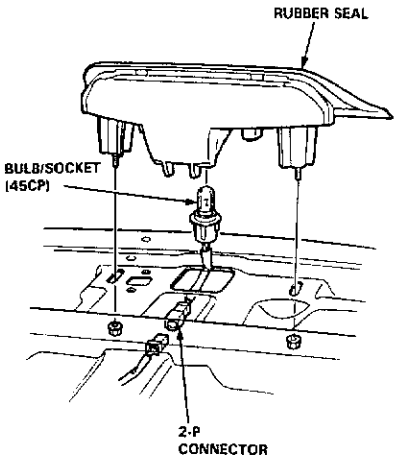

4. Install the high mount brake light in the reverse order of removal. Clean the rear window glass before installing the light. Make sure the rubber seal on the light is touching the glass all the way around.

Dash Lights Brightness Controller

Component Location Index

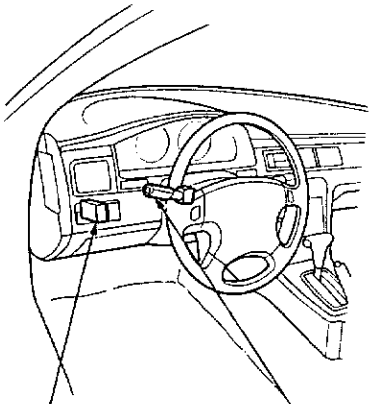

DASH LIGHTS BRIGHTNESS CONTROLLER
• Input Test/Removal, page 23-207

COMBINATION LIGHT SWITCH
Test, page 23-182
Replacement, page 23-184

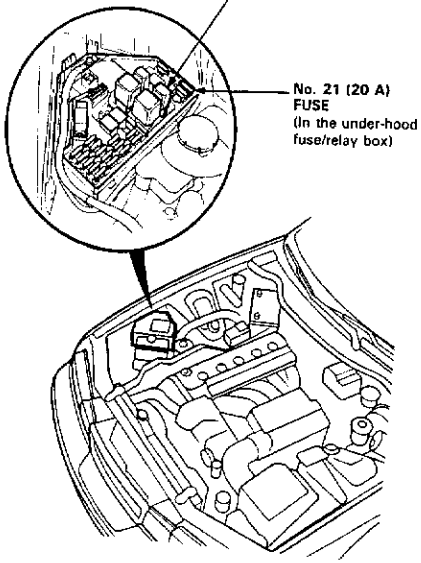

TAILLIGHT RELAY
Test, page 23-70

No. 21 (20 A) FUSE
(In the under-hood fuse/relay box)

Circuit Diagram (With Security System)

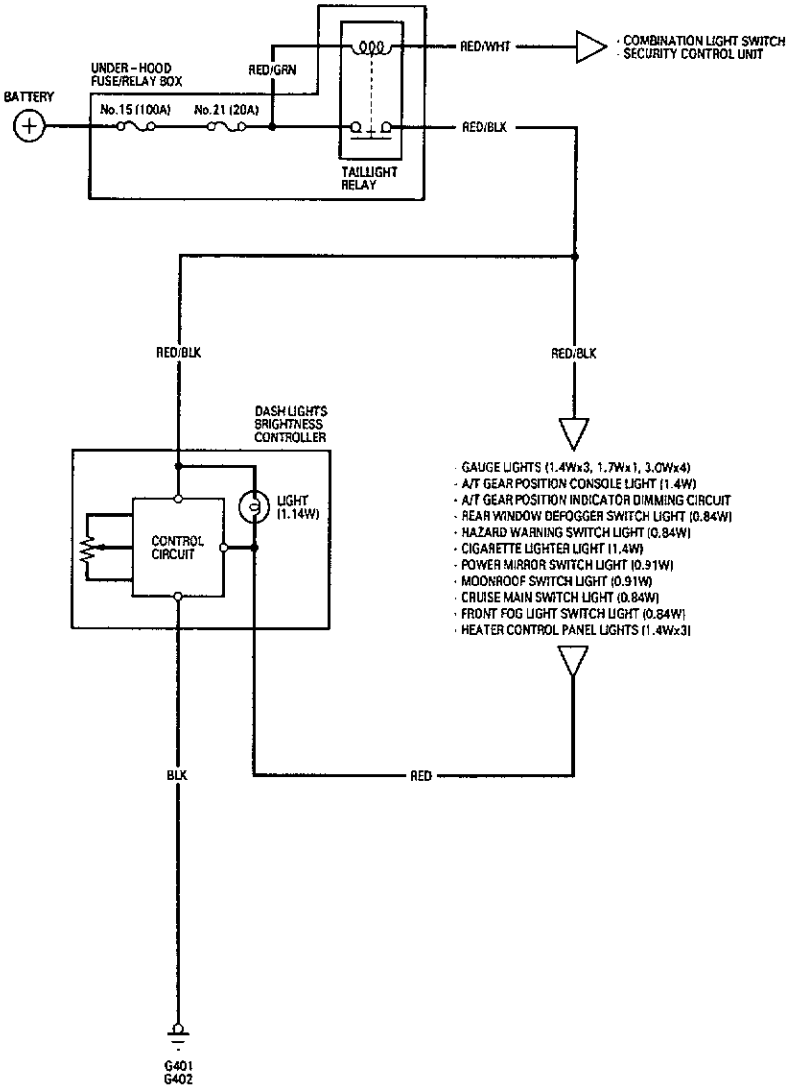

Dash Lights Brightness Controller

Circuit Diagram (Without Security System)

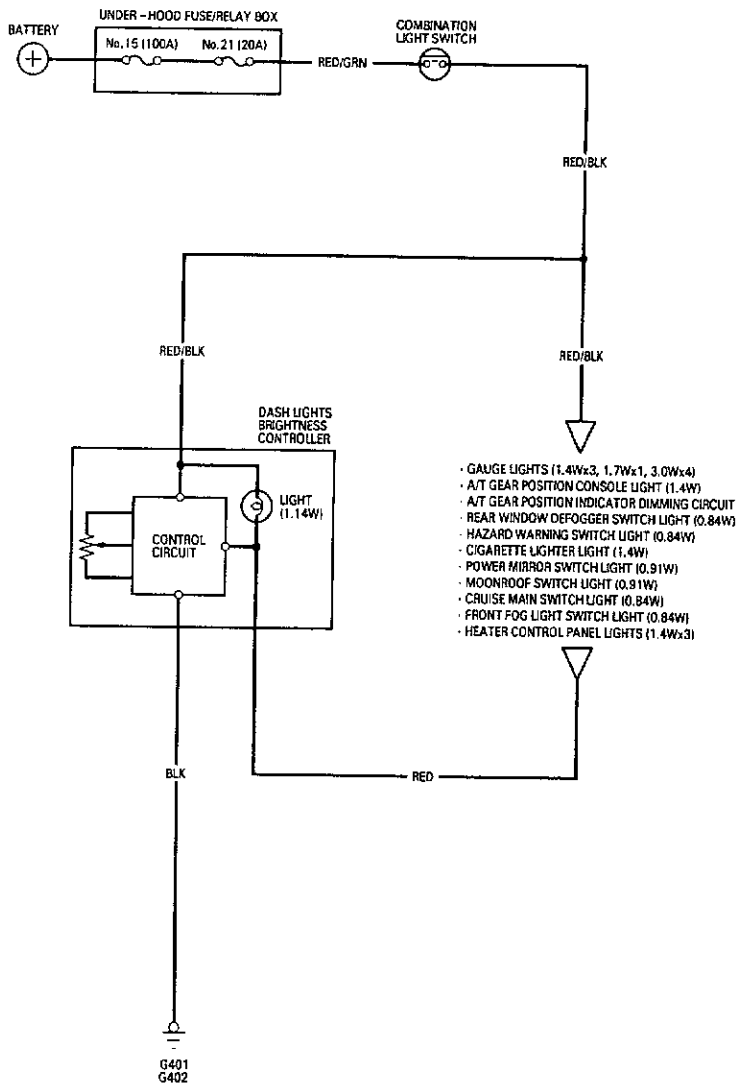

Controller Input Test

NOTE: The control unit is built into the dash lights brightness controller.

Carefully pry the controller out of the dashboard, then disconnect the 3-P connector from the controller. Inspect the connector terminals to be sure they are all making good contact.

- If the terminals are bent, loose or corroded, repair them as necessary, and recheck the system.
- If the terminals look OK, make the following input tests at the connector.
  - If any test indicates a problem, find and correct the cause, then recheck the system.
  - If all the input tests prove OK, the controller must be faulty; replace it.

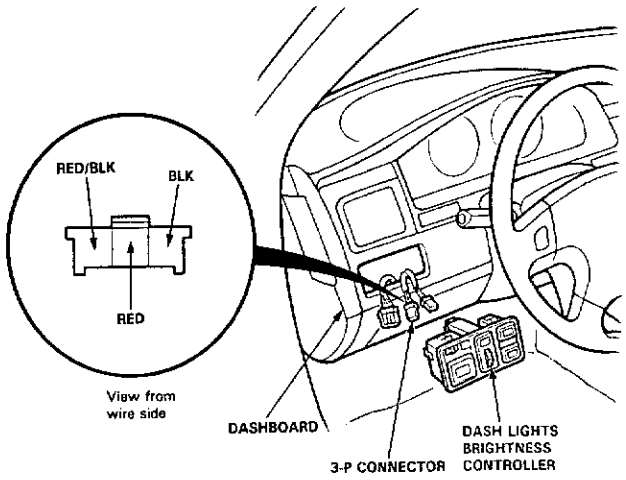

No.	Terminal	Test condition	Test: Desired result	Possible cause if result is not obtained
1	BLK	Under all conditions.	Check for continuity to gound: There should be continuity.	• Poor ground (G401, G402) • An open in the wire.
2	RED/BLK	Combination light switch ON.	Check for voltage to ground: There should be battery voltage.	• Blown No.21 (20 A) fuse (in the under-hood fuse/relay box). • Faulty combination light switch. • Faulty taillight relay. • An open in the wire.
3	RED	Combination light switch ON.	Connect to ground: Dash lights should come on full bright.	• An open in the wire.

Side Marker/Turn Signal/Hazard Flasher System

Component Location Index

CAUTION:
- All SRS electrical wiring harnesses are covered with yellow outer insulation.
- Before disconnecting the SRS wire harness, install the short connector (s) on the airbag (s).
- Replace the entire affected SRS harness assembly if it has an open circuit or damaged wiring.

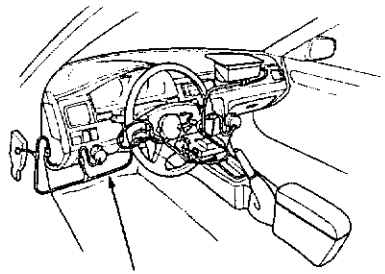

SRS MAIN HARNESS
(Covered with yellow outer insulation)

TURN SIGNAL INDICATOR LIGHTS
(In the gauge assembly)
Bulb Locations, page 23-135

COMBINATION LIGHT/TURN SIGNAL SWITCH
Test, page 23-182
Replacement, page 23-184

HAZARD WARNING SWITCH
Replacement, page 23-211
Test, page 23-211

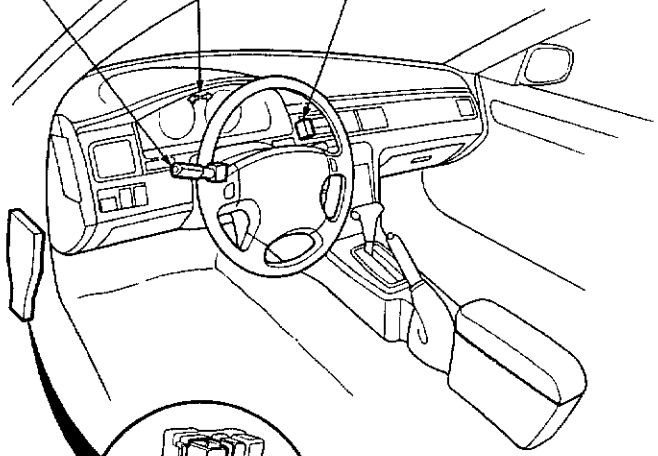

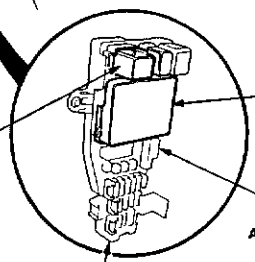

SIDE MARKER FLASHER CIRCUIT
(Built into the integrated control unit)
Input Test, page 23-167

TURN SIGNAL/HAZARD RELAY
Input Test, page 23-210

AUXILIARY FUSE HOLDER

UNDER-DASH FUSE/RELAY BOX

Circuit Diagram

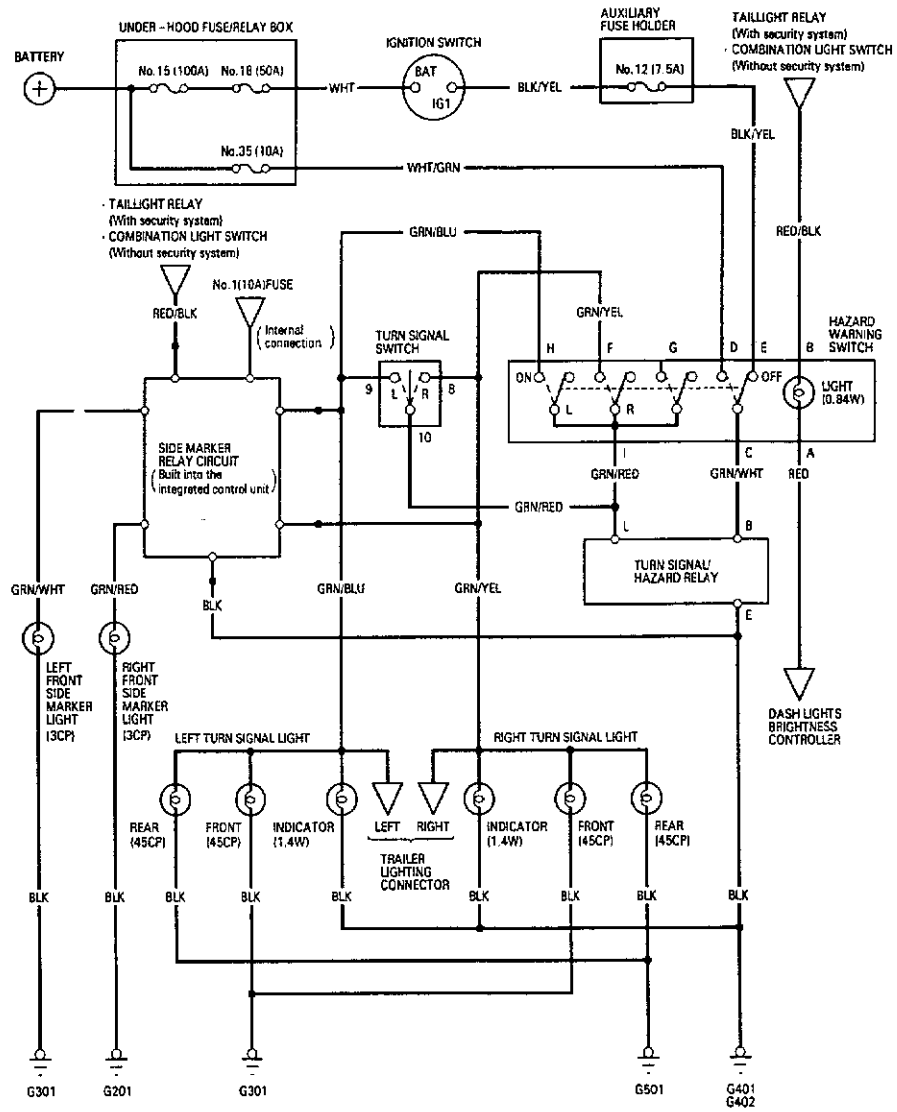

Side Marker/Turn Signal/Hazard Flasher System

Turn Signal/Hazard Relay Input Test

CAUTION:
- All SRS electrical wiring harnesses are covered with yellow outer insulation.
- Before disconnecting the SRS wire harness, install the short connector (s) on the airbag (s).
- Replace the entire affected SRS harness assembly if it has an open circuit or damaged wiring.

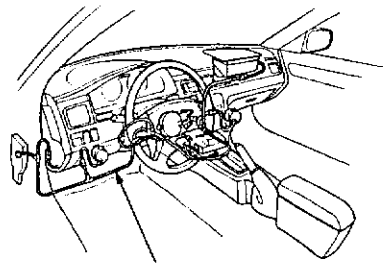

Remove the turn signal/hazard relay from the under-dash fuse/relay box.

Inspect the connector terminals to be sure they are all making good contact.

- If the terminals are bent, loose or corroded, repair them as necessary, and recheck the system.
- If the terminals look OK, make the following input tests at the connector.
  - If any test indicates a problem, find and correct the cause, then recheck the system.
  - If all the input tests prove OK, the turn signal/hazard relay must be faulty; replace it.

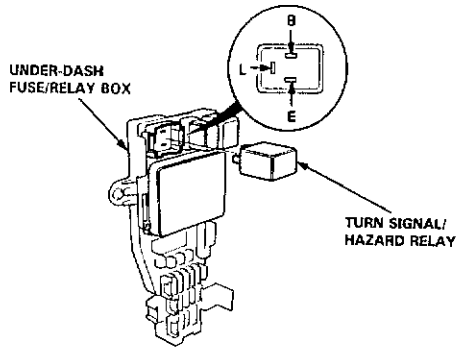

No.	Terminal	Test condition	Test: Desired result	Possible cause if result is not obtained
1	E	Under all conditions.	Check for continuity to gound: There should be continuity.	• Poor ground (G401, G402) • An open in the wire.
2	B	Ignition switch ON.	Check for voltage to ground: There should be battery voltage.	• Blown No.12 (7.5 A) fuse (in the auxiliary fuse holder). • An open in the wire. • Faulty hazard warning switch.
		Hazard warning switch ON	Check for voltage to ground: There should be battery voltage.	• Blown No.35 (10 A) fuse (in the under-hood fuse/relay box). • An open in the wire. • Faulty hazard warning switch.
3	L	Hazard warning switch ON and connect the B terminal to the L terminal.	Hazard lights should come on.	• Poor ground (G201, G301, G401, G402, G501). • Faulty hazard warning switch. • Faulty side marker relay circuit. • An open in the wire.
		Ignition switch ON and turn signal switch in Right or Left and connect the B terminal to the L terminal.	Right or Left turn signal lights should come on.	• Faulty turn signal switch.

Hazard Warning Switch Replacement

CAUTION: Be careful not to damage the dashboard and dashboard trim panel.

1. Carefully pry out the dashboard trim panel.
2. Disconnect the connectors.

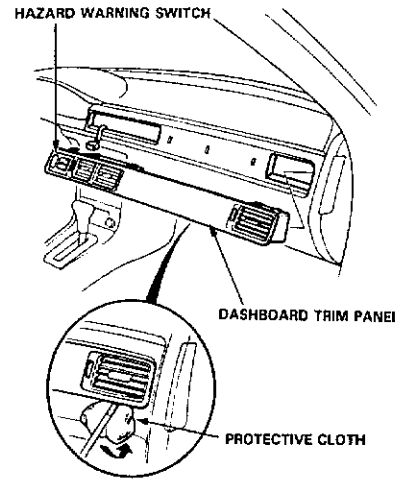

3. Remove the hazard warning switch from the dashboard trim panel.

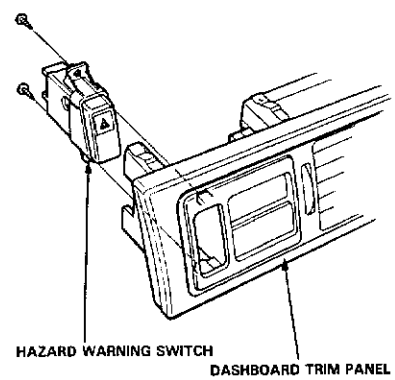

4. Install in the reverse order of removal.

Hazard Warning Switch Test

1. Remove the hazard warning switch from the dashboard trim panel.
2. Check for continuity between the terminals in each switch position according to the table.

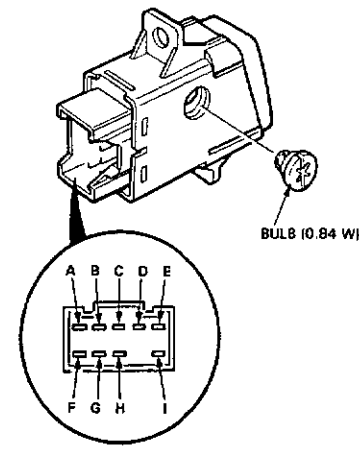

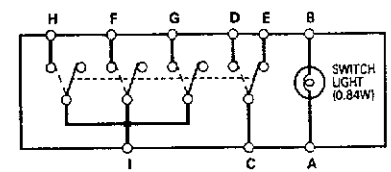

Terminal / Position	A		B	C	D	E	F	G	H	I
OFF	○	⊗	○	○		○				
ON	○	⊗	○	○	○		○	○	○	○

Component Location Index

CAUTION:
- All SRS electrical wiring harnesses are covered with yellow outer insulation.
- Before disconnecting the SRS wire harness, install the short connector (s) on the airbag (s).
- Replace the entire affected SRS harness assembly if it has an open circuit or damaged wiring.

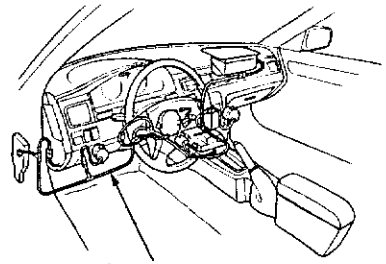

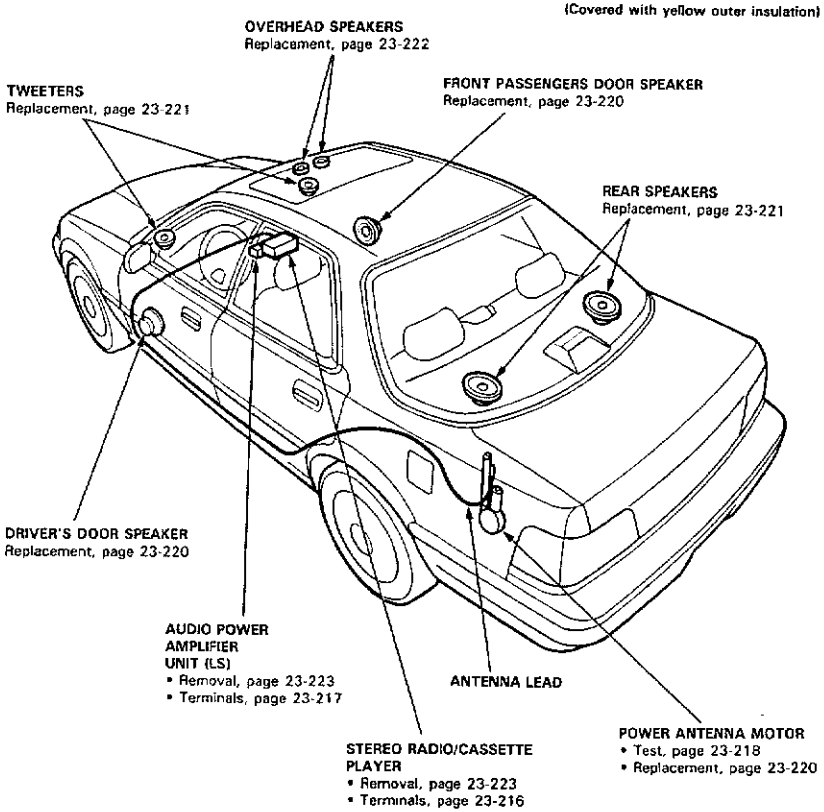

Description

DSP System (GS):
The Digital Signal Processor (DSP) enables you to vary the acoustics in the car according to the style of music you want to listen to. As a result, the sound quality will be improved to such an extent that you'll think you're in a concert hall instead of a car.
During a performance of live music the listener not only hears direct sound, but also reflected sound from the walls and ceiling. This reflected sound and the delay between it and the direct sound reaching the ears, are what gives a live performance greater depth.
As opposed to a conventional car audio system, giving only direct sound with almost no reflection or echo, the DSP reproduces the combination of direct and reflected sound through eight speakers by delaying or reverberating some portions of the source signal.
In order to achieve the most suitable acoustics for the style of music you're listening to, select the DSP mode recommended in the table.

Style of music	Jazz	Pop	Rock-Classical	Rock	Classical	Easy Listening
DSP mode	1 CLUB	2 STUDIO	3 HALL	4 ARENA	5 CATHDRL	6 DEN

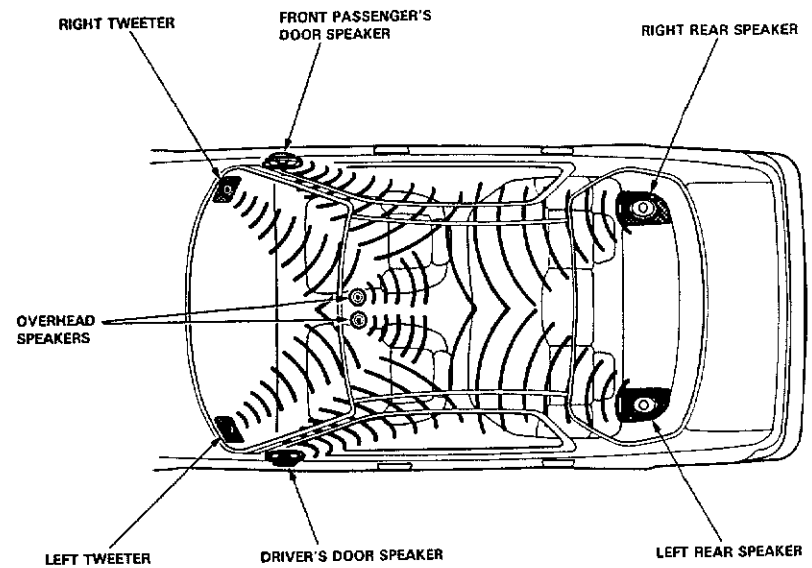

Circuit Diagram (GS)

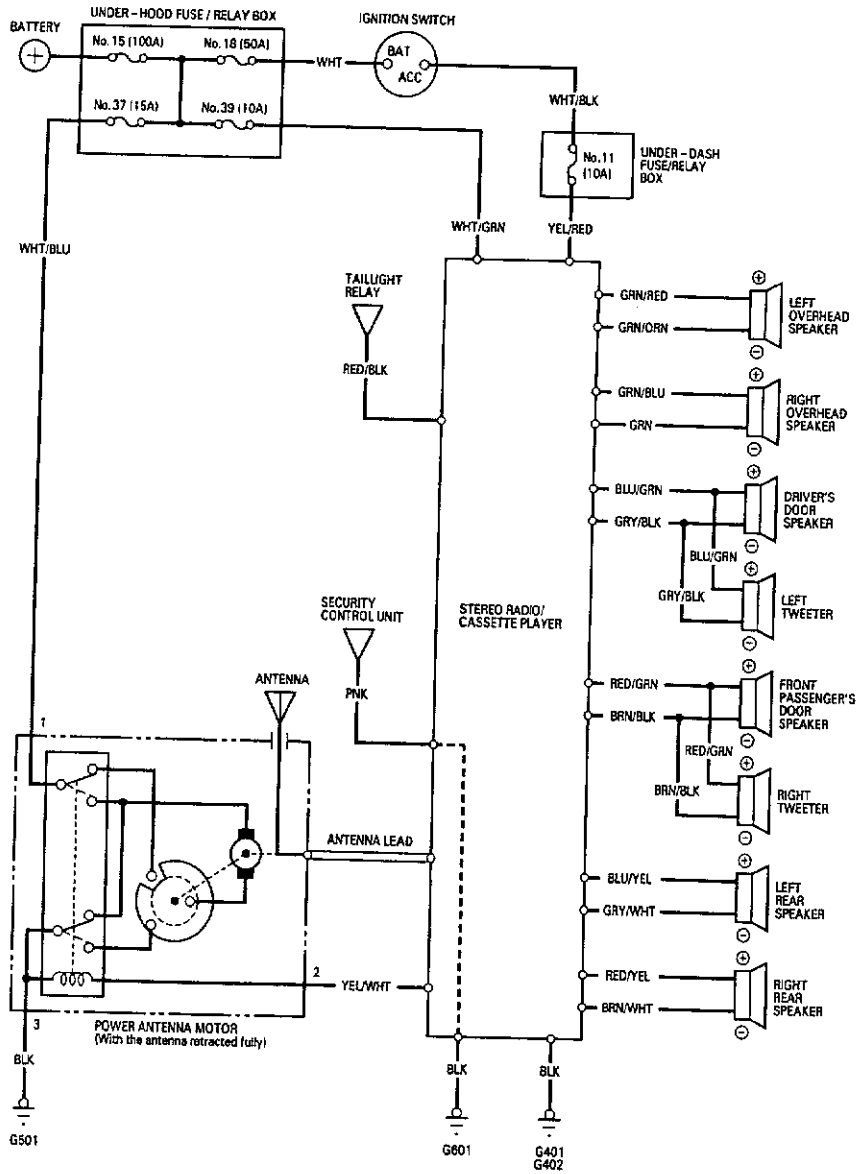

Circuit Diagram (LS)

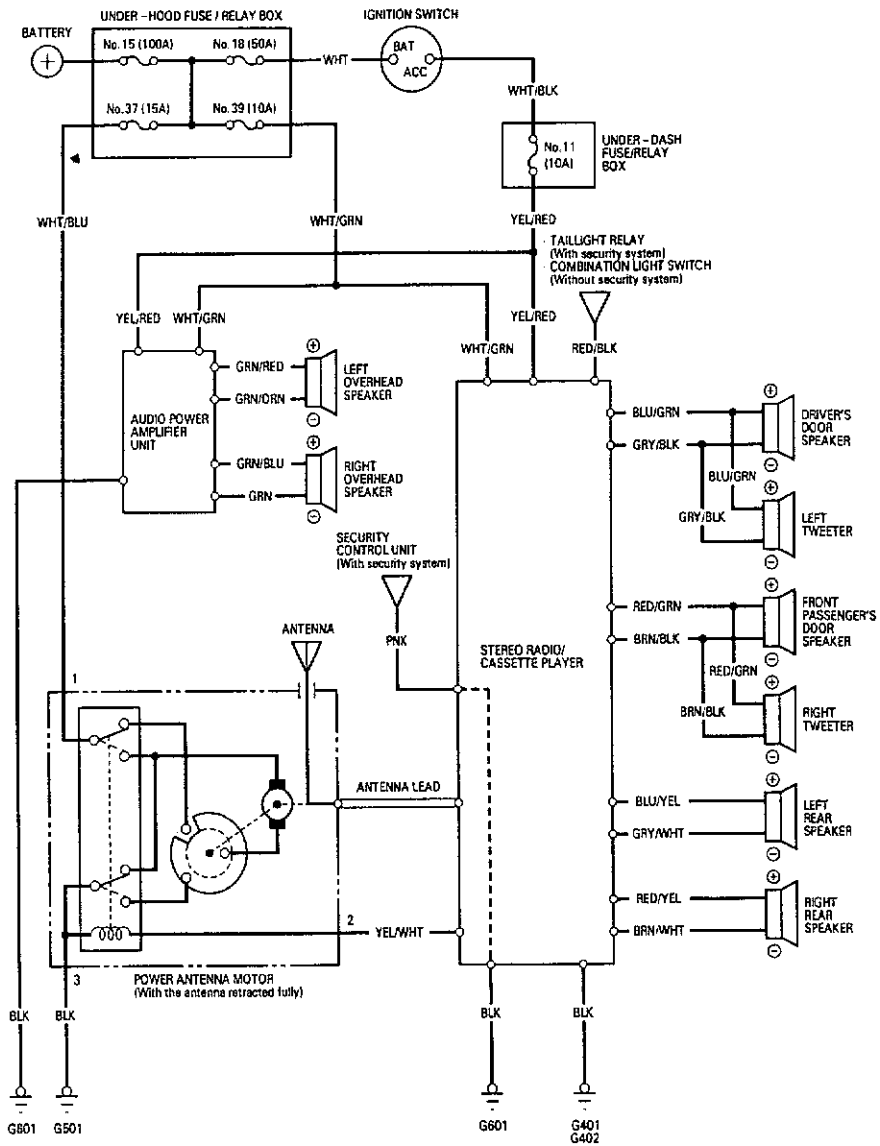

Stereo Radio/Cassette Player Terminals

GS:

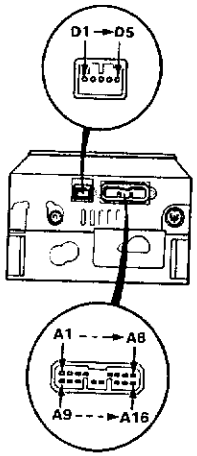

Terminal	Wire	Destination
A1	RED/GRN	Front passenger's door speaker ⊕
A2	BLU/GRN	Driver's door speaker ⊕
A3	RED/BLK	Lights on signal
A4	WHT/GRN	Constant power (Tuning memory)
A5	YEL/RED	ACC (Main stereo poer supply)
A6	YEL/WHT	Radio switched power (To antenna)
A7	BLU/YEL	Left rear speaker ⊕
A8	RED/YEL	Right rear speaker ⊕
A9	BRN/BLK	Front passenger's door speaker ⊖
A10	GRY/BLK	Driver's door speaker ⊖
A11	–	(not used)
A12	PNK	Security (IN)
A13	BLK	Security ground (G601)
A14	BLK	Ground (G401, G402)
A15	GRY/WHT	Left rear speaker ⊖
A16	BRN/WHT	Right rear speaker ⊖

Terminal	Wire	Destination
D1	GRN	Right overhead speaker ⊖
D2	GRN/BLU	Right overhead speaker ⊕
D3	GRN/ORN	Left overhead speaker ⊖
D4	GRN/RED	Left overhead speaker ⊕
D5	–	(not used)

LS:

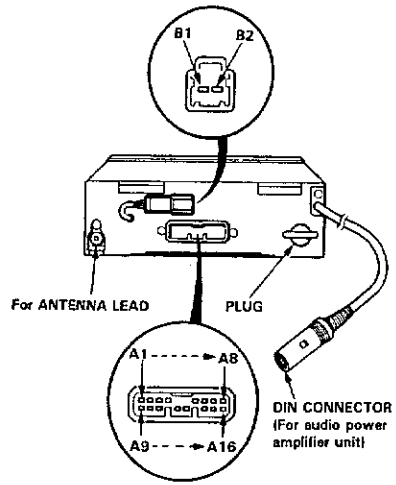

Terminal	Wire	Destination
A1	RED/GRN	Front passenger's door speaker ⊕
A2	BLU/GRN	Driver's door speaker ⊕
A3	RED/BLK	Lights on signal
A4	WHT/GRN	Constant power (Tuning memory)
A5	YEL/RED	ACC (Main stereo power supply)
A6	YEL/WHT	Radio switched power (To antenna)
A7	BLU/YEL	Left rear speaker ⊕
A8	RED/YEL	Right rear speaker ⊕
A9	BRN/BLK	Front passenger's door speaker ⊖
A10	GRY/BLK	Driver's door speaker ⊖
A11	–	(not used)
A12	–	(not used)
A13	–	(not used)
A14	BLK	Ground (G401, G402)
A15	GRY/WHT	Left rear speaker ⊖
A16	BRN/WHT	Right rear speaker ⊖

Terminal	Wire	Destination
B1	PNK	Security (IN)
B2	BLK	Security ground (G601)

Audio Power Amplifier Terminals

LS:

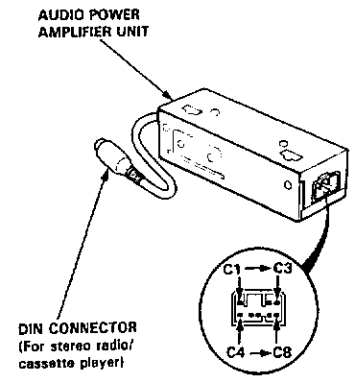

Terminal	Wire	Destination
C1	WHT/GRN	Constant power
C2	GRN/BLU	Right overhead speaker ⊕
C3	GRN/RED	Left overhead speaker ⊖
C4	YEL/RED	ACC
C5	–	(not used)
C6	BLK	Ground (G601)
C7	GRN	Right overhead speaker ⊖
C8	GRN/ORN	Left overhead speaker ⊖

Power Antenna Motor Test

1. Remove the trunk side trim panel.
2. Disconnect the 3-P connector from the motor and remove the connector from its clamp.
3. First check power to the motor at the connector terminals:
   - There should be battery voltage between the WHT/BLU (+) and BLK (−) terminals all the time
   - There should be battery voltage between the YEL/WHT (+) and BLK (−) terminals only with the ignition and radio switched ON.
4. Test motor operation:

EXTEND: Connect battery power to the No.1 and No.2 terminals and ground the No.3 terminal.

RETRACT: Then disconnect power from the No.2 terminal.

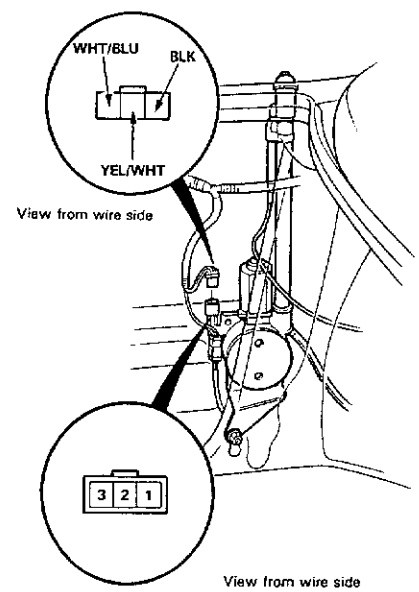

5. If the motor fails to run or does not run smoothly, replace it.

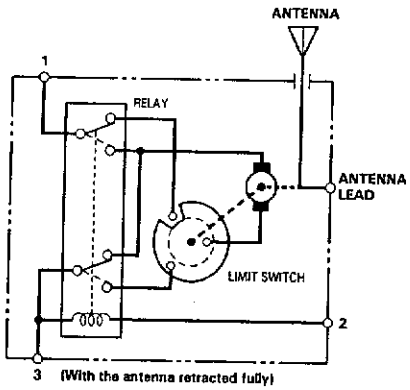

Sticking Antenna:
The antenna sticks in either the up or down position.

1. Using the antenna wrench, remove the antenna nut, spacer, and bushing (see page 23-219).
2. Clean the antenna mast housing threads and reinstall the spacer and bushing.

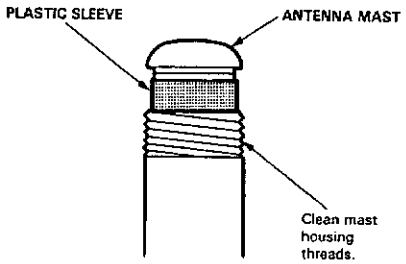

3. Use the antenna nut wrench and tighten the antenna nut to 2.3N·m (0.23kg·m, 1.7lb-ft). If you overtightened the nut, the antenna may stick. If sticking occurs, back the nut off a little, then turn the radio on and off to raise and lower the antenna again. Repeat until the antenna moves freely.

Antenna Mast Replacement

Removal
NOTE: The antenna mast alone can be replaced without having to remove the power antenna motor.

1. Remove the antenna nut, spacer and bushing.
2. Carefully withdraw the antenna mast while extending it by turning the radio switch ON.

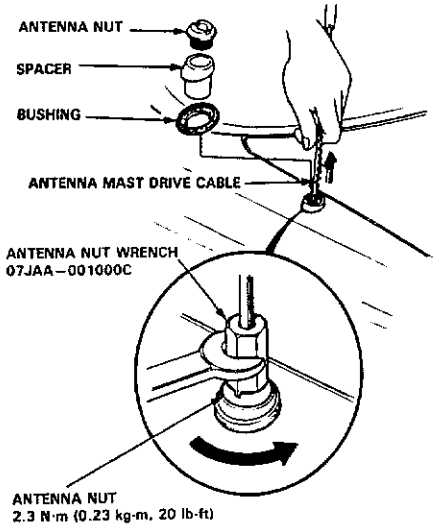

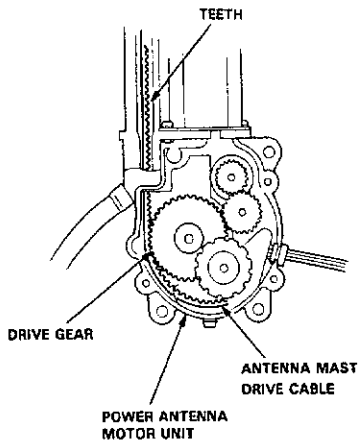

Installation
1. Hold the antenna so the teeth on the drive cable face in the direction shown, then insert the cable into the antenna housing.

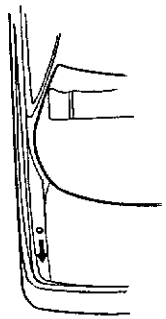

2. Check for engagement of the cable teeth with the drive gear by carefully moving the cable up and down.
3. Turn the radio switch "OFF", and let the motor pull the drive cable into the antenna housing.
4. Clean the antenna housing threads then insert the antenna into the housing. Install the bushing spacer, and install and tighten the antenna nut to 2.3 N·m (0.23 kg-m, 1.7 lb-ft).
5. Check that the antenna mast retracts and extends fully when the radio switch is turned ON and OFF repeatedly. If you overtightened the nut, the antenna may stick. If sticking occurs, back the nut off a little, then raise and lower the antenna again. Repeat until the antenna moves freely.

Power Antenna Motor Replacement

1. Remove the trunk side trim panel.
2. Disconnect the 3-P connector and antenna lead from the motor, then remove the antenna nut and motor bracket nut.

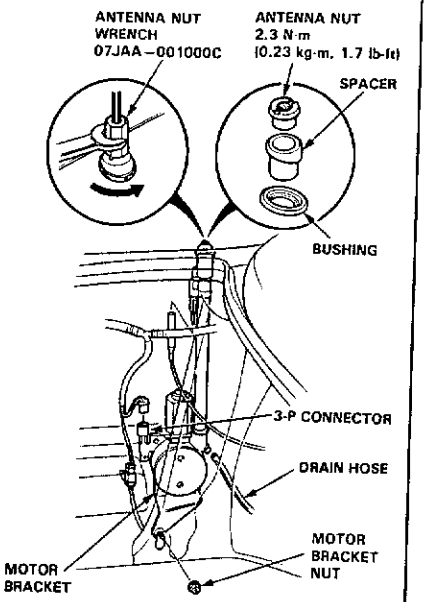

3. Remove the motor and antenna as an assembly.
4. Install in the reverse order of removal.

NOTE: Tighten the antenna nut, then tighten the motor bracket nut.

Door Speaker Replacement

1. Remove the door panel.
2. Remove the three screws, then disconnect the 2-P connector from the speaker.

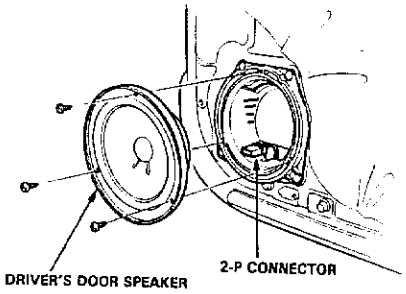

3. Install in the reverse order of removal.

Rear Speaker Replacement

1. Remove the three screws from the trunk side, then remove the speaker cover.
2. Remove the four screws, then disconnect the connector from the speaker and remove the speaker.

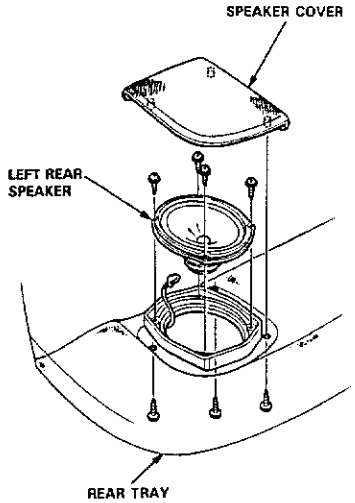

3. Install in the reverse order of removal.

Tweeter Replacement

1. Carefully pry the tweeter out of the dashboard, then disconnect the 2-P connector from the speaker.

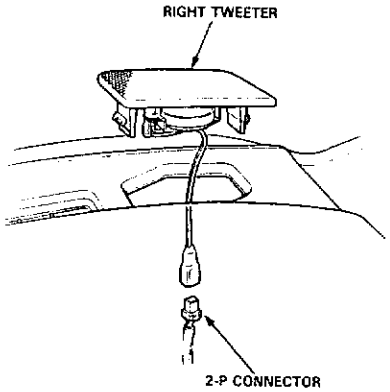

2. Install in the reverse order of removal.

Overhead Speaker Replacement

1. Turn the ceiling light switch OFF.
2. Pry off the lens.
3. Remove the bolt and the housing.
4. Disconnect the 4 P connector from the housing.

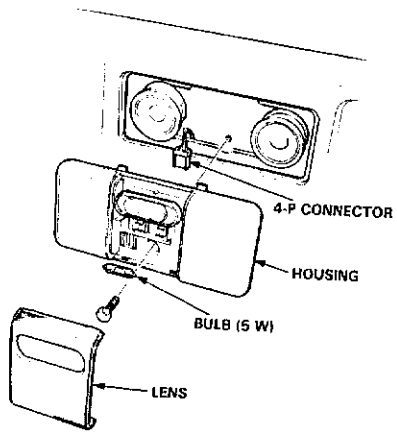

5. Remove the two screws, then disconnect the 2-P connectors from the wire harness.

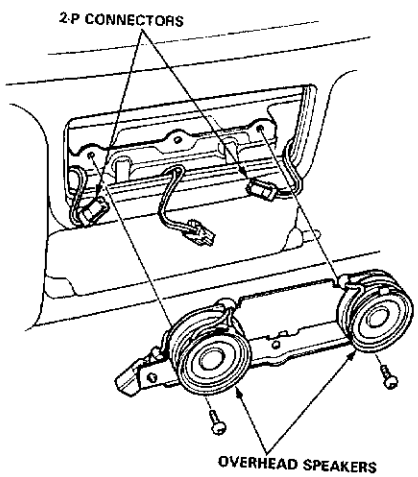

6. Disconnect the wires from the overhead speaker, then remove the screw.

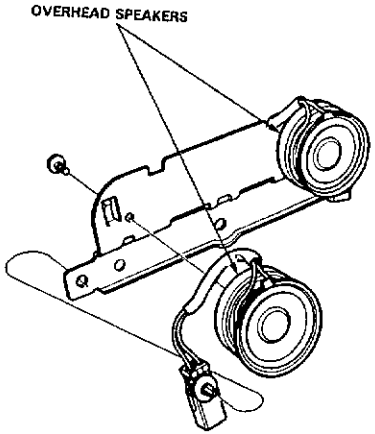

7. Install in the reverse order of removal.

Unit Removal

CAUTION:
- **All SRS electrical wiring harnesses are covered with yellow outer insulation.**
- **Before disconnecting the SRS wire harness, install the short connector (s) on the airbag (s).**
- **Replace the entire affected SRS harness assembly if it has an open circuit or damaged wiring.**

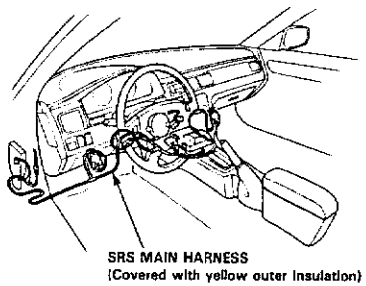

NOTE: The radio may have a coded theft protection circuit. Be sure to get the customer's code number before
- Disconnecting the battery.
- Removing the No. 39 (10 A) fuse in the underhood fuse/relay box.
- Removing the radio.

After service, reconnect power to the radio and turn it on. When the word "CODE" is displayed, enter the customer's 5-digit code to restore radio operation.

1. Remove the center console (see section 20).
2. Remove the heater control panel and the ashtray, then remove the four screws.

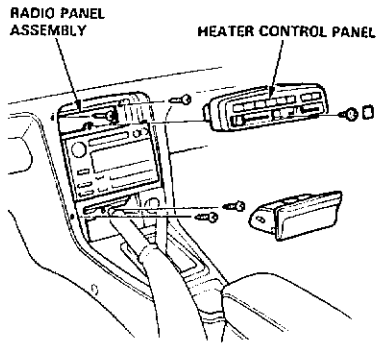

3. Disconnect the connectors and antenna lead, then take out the radio panel assembly.
4. Remove the two screws, then disconnect the audio power amplifier unit (LS).

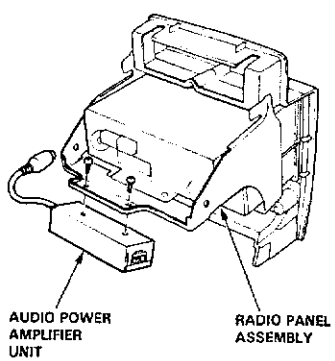

5. Install in the reverse order of removal.

Component Location Index

CAUTION:
- All SRS electrical wiring harnesses are covered with yellow outer insulation.
- Before disconnecting the SRS wire harness, install the short connector (s) on the airbag (s).
- Replace the entire affected SRS harness assembly if it has an open circuit or damaged wiring.

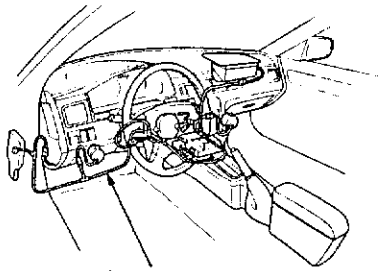

SRS MAIN HARNESS
(Covered with yellow outer insulation)

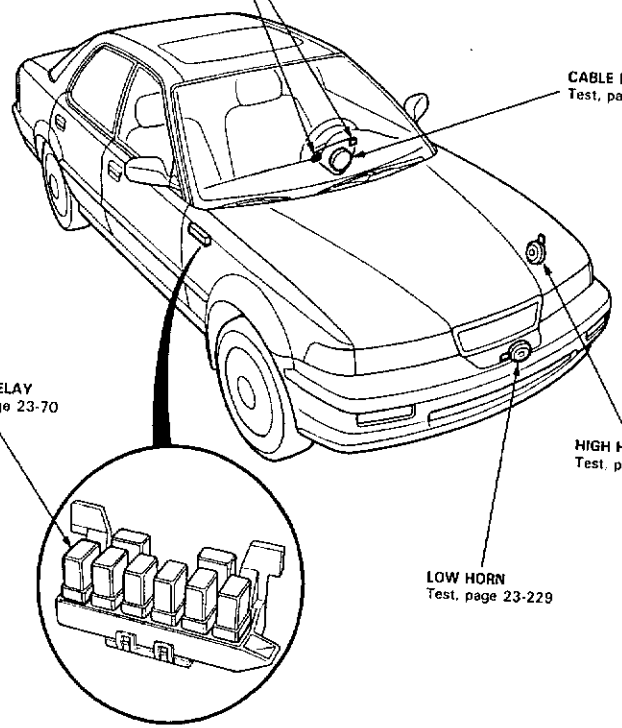

Circuit Diagram

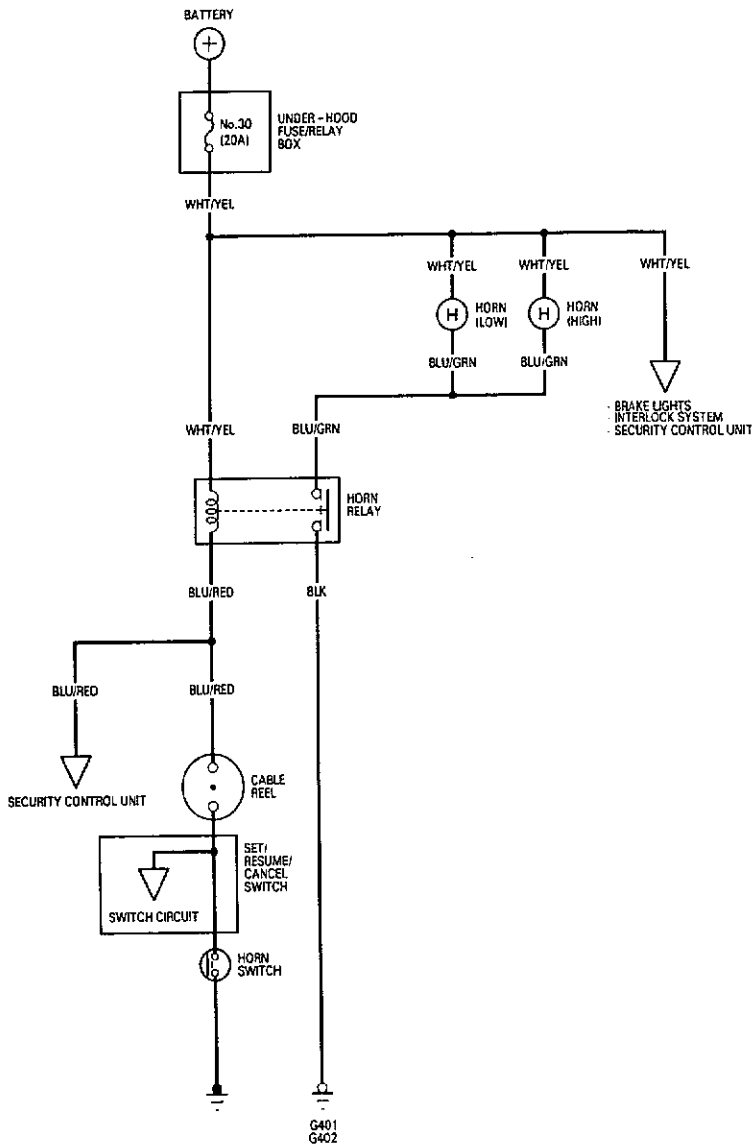

Switch Test

CAUTION:
- **All SRS electrical wiring harnesses are covered with yellow outer insulation.**
- **Before disconnecting the SRS wire harness, install the short connector (s) on the airbag (s).**
- **Replace the entire affected SRS harness assembly if it has an open circuit or damaged wiring.**

NOTE: The radio may have a coded theft protection circuit. Be sure to get the customer's code number before
- Disconnecting the battery.
- Removing the No. 39 (10 A) fuse in the underhood fuse/relay box.
- Removing the radio.

After service, reconnect power to the radio and turn it on. When the word "CODE" is displayed, enter the customer's 5-digit code to restore radio operation.

1. Disconnect the battery negative cable, then disconnect the positive cable.

2. Install short connectors on the airbag (s):

   Driver's side:
   - Remove the access panel from the steering wheel, then remove the short connector (RED) from the panel.
   - Disconnect the connector between the driver's airbag and cable reel, then install the short connector (RED) on the airbag side of the connector.

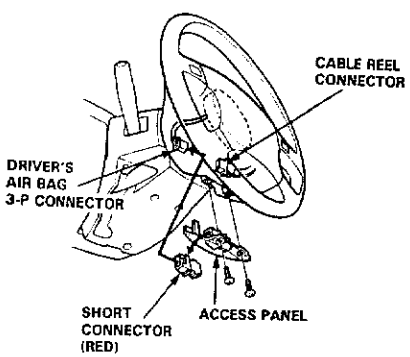

   Passenger's side:
   - Remove the glove box.

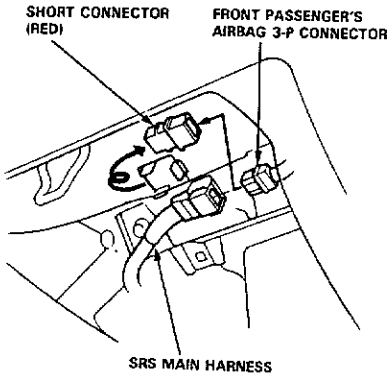

   - Disconnect the connector between the front passenger's airbag and the SRS main harness, then install the short connector (RED) on the airbag side of the connector.

3. Disconnect the cable reel and the SRS main harness 6-P connector, and connect Test Harness C only to the cable reel side of the connector.

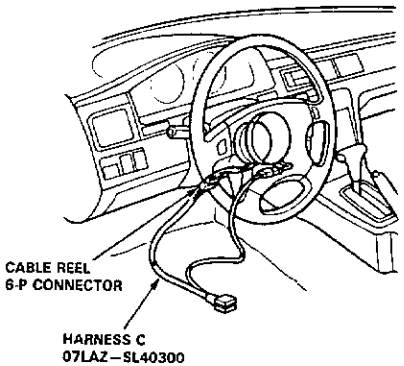

4. Check for continuity between the No.3 terminal and body ground with the horn switch pressed. There should be continuity.

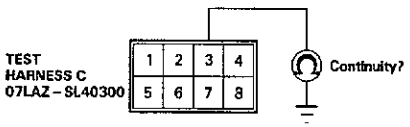

- If there is continuity, the horn switch is OK.
- If there is no continuity, go to step 5.

5. Remove the two TORX® bolts using a TORX® T30 bit, then remove the driver's airbag assembly.

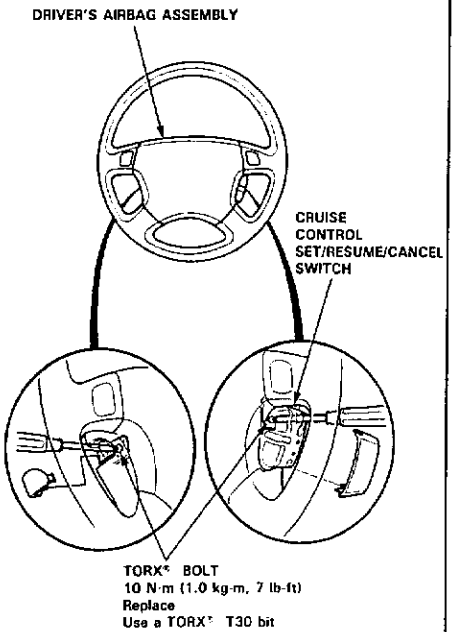

(cont'd)

Switch Test (cont'd)

6. Check for continuity between the horn positive terminal and the steering column shaft with the horn switch pressed.
   There should be continuity.

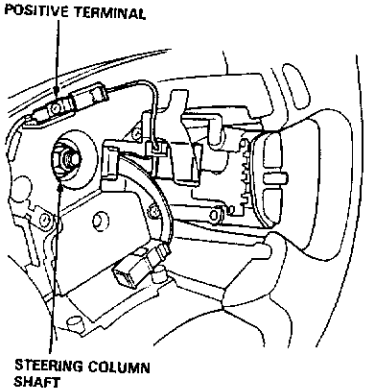

- If there is continuity.
  - Test the set/resume/cancel switch (see page 23-299).
    If the switch is OK, replace the cable reel.
- If there is no continuity, remove the nut and four screws. Then remove the steering wheel. Remove the cover from the back of the steering wheel and replace the horn switch.

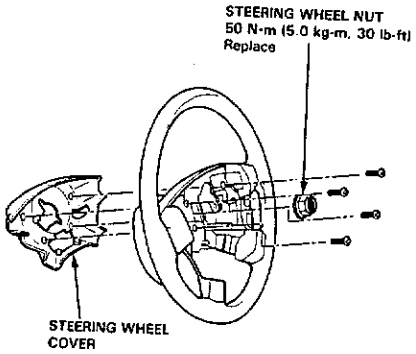

7. Reinstall the steering wheel (see section 17).

Horn Test

1. Disconnect the 2-P connector from the horn.
2. Remove the low and high horns.

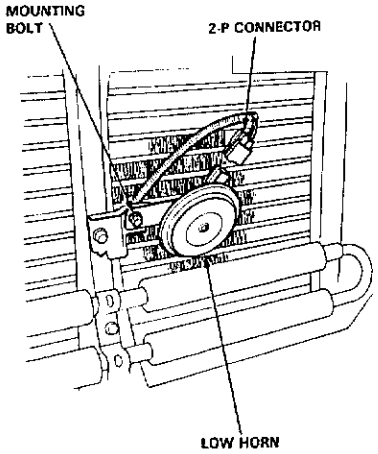

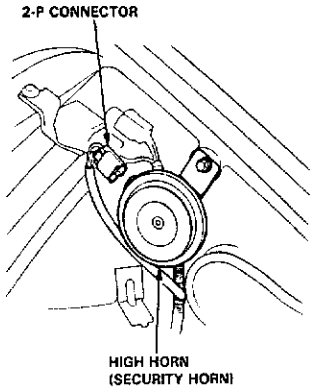

3. Test the horn by connecting battery power to one terminal and grounding the other. The horn should sound.

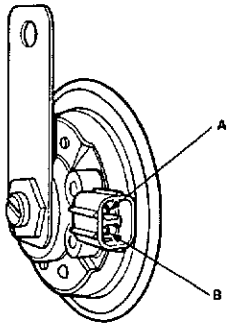

4. Replace the horn if it fails to sound.

Circuit Diagram

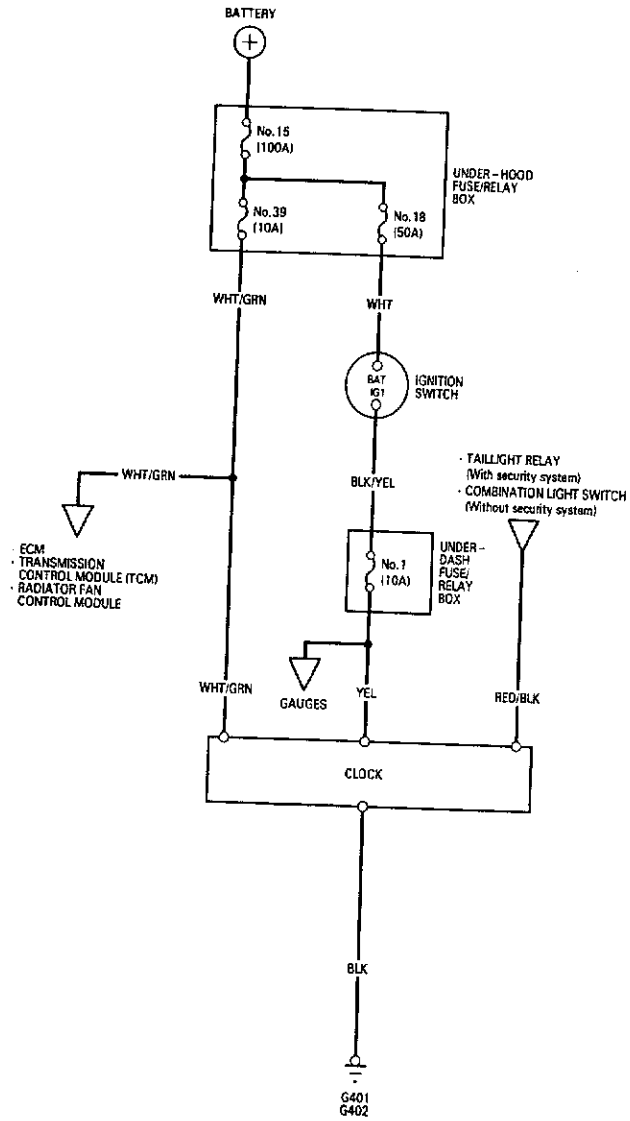

Replacement

CAUTION: Be careful not to damage the dashboard and dashboard trim panel.

1. Pry out the dashboard trim panel.

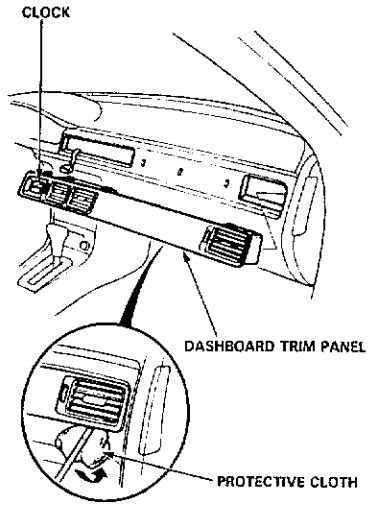

2. Remove the clock from the dashboard trim panel.

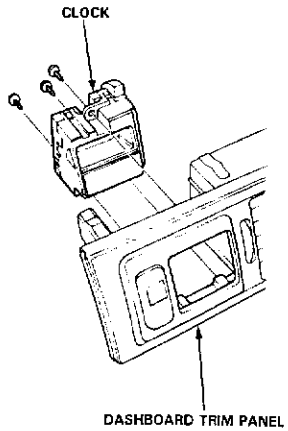

Terminals

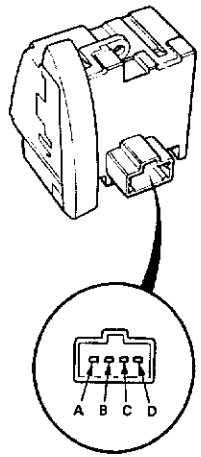

Terminal	Wire	Destination
A	WHT/GRN	Constant power (Time memory)
B	YEL	IG1 (Main clock power supply)
C	RED/BLK	Lights-on signal
D	BLK	Ground

Component Location Index

CAUTION:
- All SRS electrical wiring harnesses are covered with yellow outer insulation.
- Before disconnecting the SRS wire harness, install the short connector (s) on the airbag (s).
- Replace the entire affected SRS harness assembly if it has an open circuit or damaged wiring.

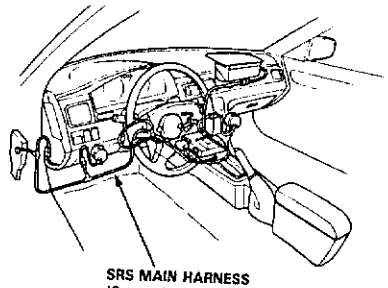

SRS MAIN HARNESS
(Covered with yellow outer insulation)

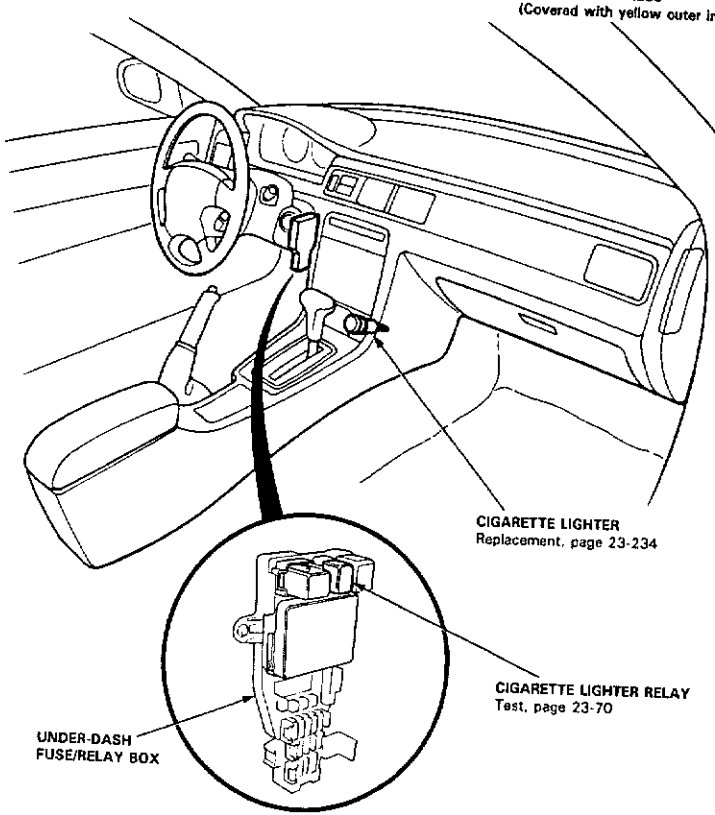

CIGARETTE LIGHTER
Replacement, page 23-234

CIGARETTE LIGHTER RELAY
Test, page 23-70

UNDER-DASH
FUSE/RELAY BOX

Circuit Diagram

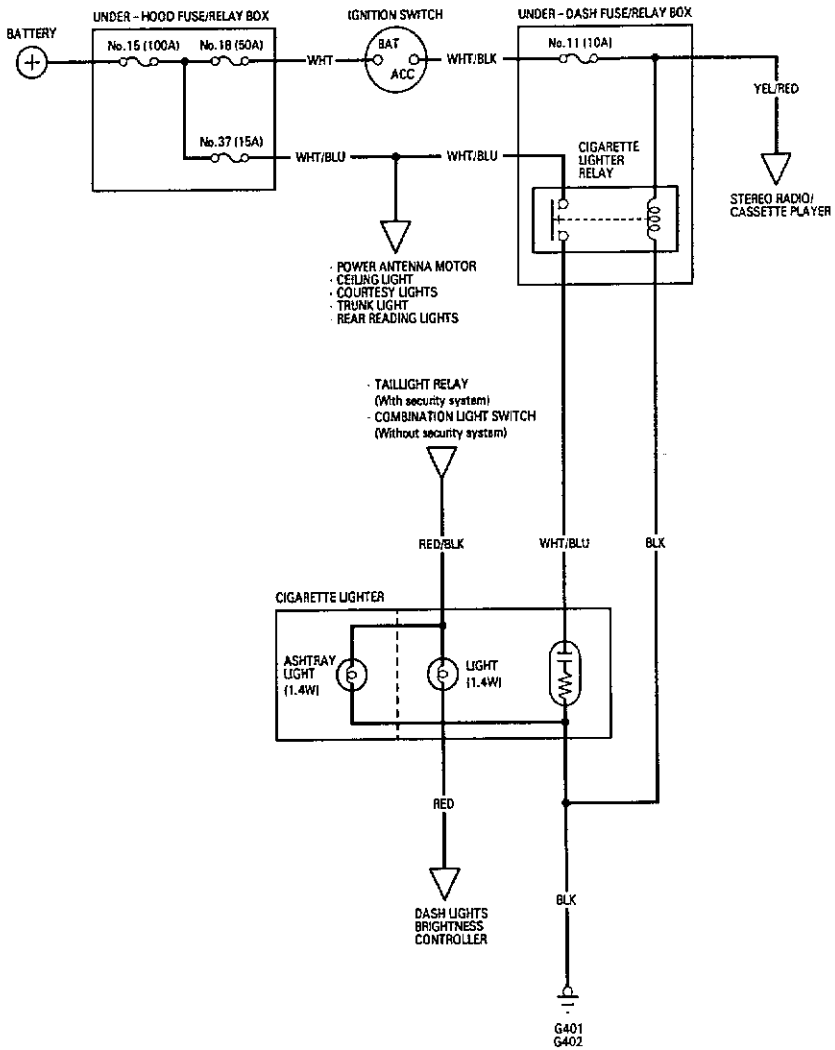

Replacement

CAUTION:
- All SRS electrical wiring harnesses are covered with yellow outer insulation.
- Before disconnecting the SRS wire harness, install the short connector (s) on the airbag (s).
- Replace the entire affected SRS harness assembly if it has an open circuit or damaged wiring.

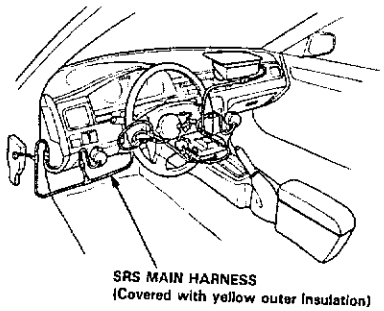

NOTE: The radio may have a coded theft protection circuit. Be sure to get the customer's code number before
– Disconnecting the battery.
– Removing the No. 39 (10 A) fuse in the underhood fuse/relay box.
– Removing the radio.
After service, reconnect power to the radio and turn it on. When the word "CODE" is displayed, enter the customer's 5-digit code to restore radio operation.

1. Remove the center console (see section 20).
2. Remove the heater control panel and radio panel assembly (see page 23-223).
3. Disconnect the thermofuse case from the socket end.

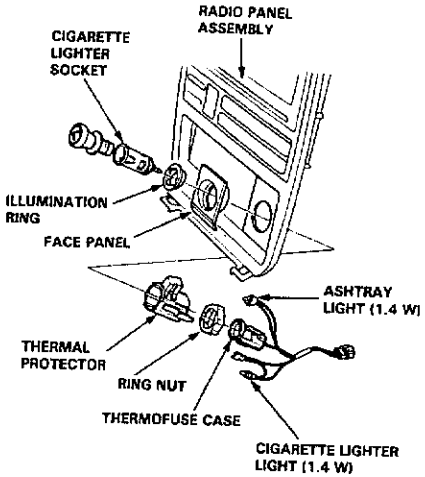

4. Remove the ring nut and separate the cigarette lighter socket from the thermal protector.
5. When installing the cigarette lighter, align each lug on the face panel, illumination ring and cigarette lighter socket with the groove in the hole, then position the bulb housing on the thermal protector between the stops in the radio panel.
6. Make sure that the ground wire, bulb socket and thermo fuse case are seated against the cigarette lighter assembly.

Component Location Index

CAUTION:
- All SRS electrical wiring harnesses are covered with yellow outer insulation.
- Before disconnecting the SRS wire harness, install the short connector (s) on the airbag (s).
- Replace the entire affected SRS harness assembly if it has an open circuit or damaged wiring.

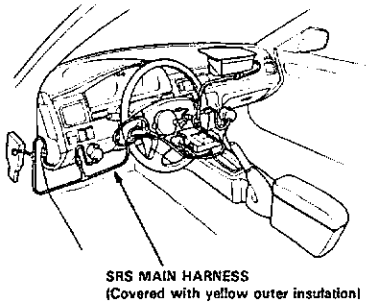

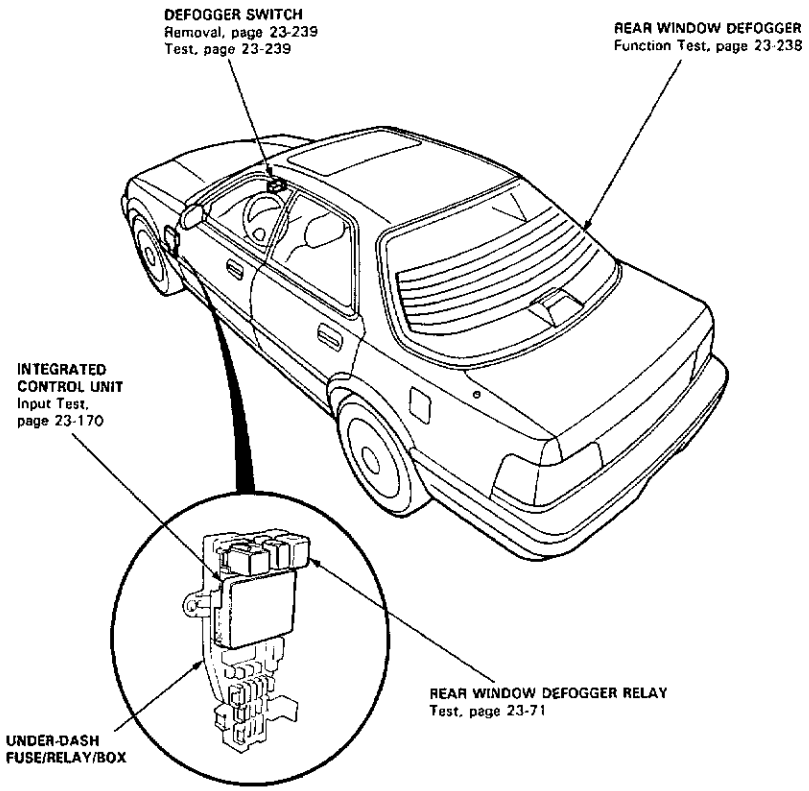

Rear Window Defogger

Circuit Diagram

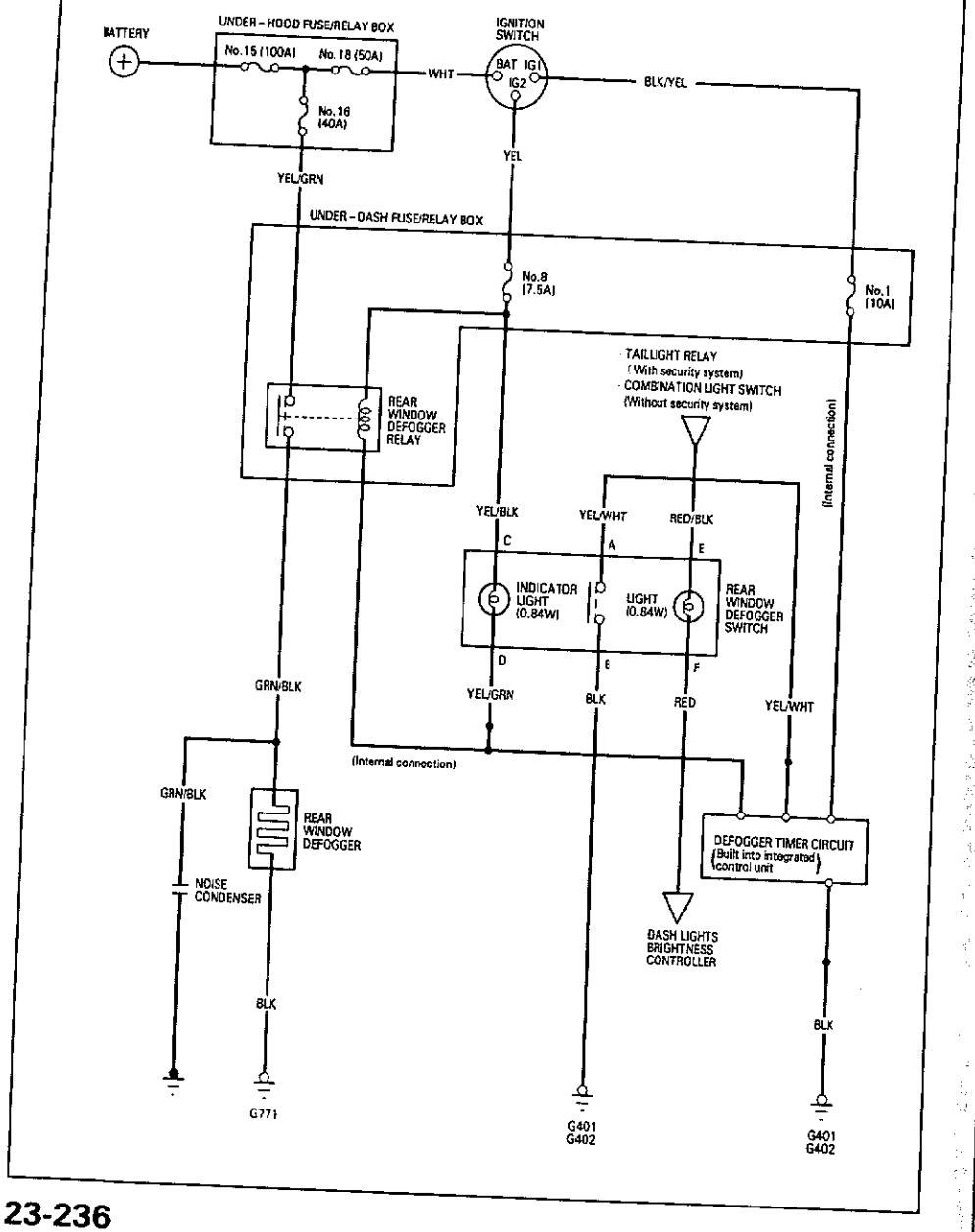

Troubleshooting

NOTE: The numbers in the table show the troubleshooting sequence.

Symptom \ Item to be inspected	Blown indicator light bulb	Blown No.8 (7.5 A) fuse (in the under-dash fuse/relay box)	Defogger timer circuit input (in the integrated control unit)	Blown No.1 (10 A) fuse (in the under-dash fuse/relay box)	Blown No.16 (40 A) fuse (in the under-hood fuse/relay box)	Function test	Defogger relay	Defogger switch	Poor ground	Open circuit wires, loose or disconnected terminals
Defogger works, but indicator light does not go on.	1									YEL/BLK
Defogger does not work and indicator light does not go on.		1	3	2				4	G401 G402	YEL, YEL/WHT or YEL/BLK
Defogger does not work, but indicator light goes on.					1	3	2	4	G771	YEL/WHT, YEL/BLK
Defogger-on time is too long or too short (normal operation time is 25 minutes).			1							YEL/WHT or BLK

Function Test

CAUTION: Be careful not to scratch or damage the defogger wires with the tester probe.

1. Check for volage between the positive terminal and body ground with the ignition switch and the defogger switch ON.
   There should be battery voltage.
   - If there is no voltage, check for:
     - Faulty defogger relay.
     - Faulty defogger switch.
     - Faulty integrated control unit.
     - An open in the GRN/BLK wire.
   - If there is battery voltage, go to step 2.

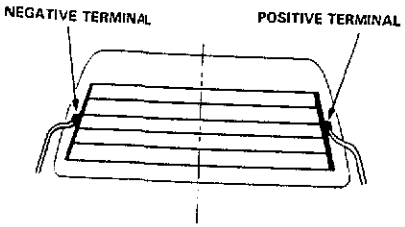

2. Check for continuity between the negative terminal and body ground.
   If no continuity, check for an open in the defogger ground wire.
3. Touch the voltmeter positive probe to the halfway point on each defogger wire, and the negative probe to the negative terminal.
   There should be approximately 6V with the ignition switch and the defogger switch ON.
   - If the voltage is as specified, the defogger wire is OK.
   - If there is battery voltage, the defogger wire is broken on the negative side.
   - If there is no voltage, the defogger wire is broken on the positive side.

Defogger Wire Repair

NOTE: To make an effective repair, the broken section must be no longer than 25 mm (1.0 in)

1. Lightly rub the area around the break with fine steel wool, then clean it with alcohol.
2. Carefully mask above and below the broken portion of the defogger wire with cellophane tape

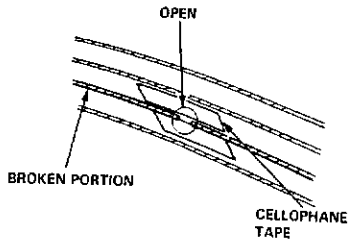

3. Using a small brush, apply a heavy coat of silver conductive paint extending about 3 mm (1/8 in) on both sides of the break. Allow 30 minutes to dry.

   NOTE: Thoroughly mix the paint before use.

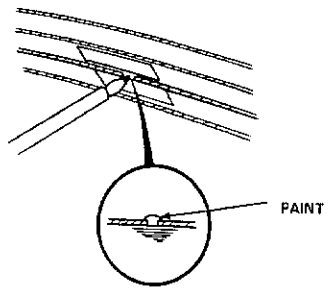

4. Check for proper operation with a voltmeter (half of battery voltage at the halfway-point).
5. Apply a second coat of paint in the same way. Let it dry for three hours before removing the tape.

Switch Test

1. Remove the rear window defogger switch.
2. Check for continuity between the terminal in each switch position according to the table.

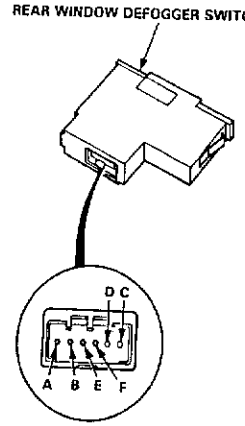

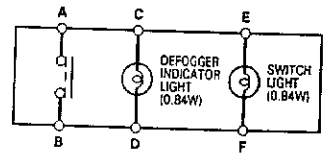

Position \ Terminal	A	B	C		D	E		F
PUSHED	○	○						
RELEASED			○	⊖	○	○	⊖	○

Switch Removal

NOTE. Be careful not to damage the instrument panel.

1. Carefully pry the switch out of the instrument panel.
2. Disconnect the 6-P connector from the switch

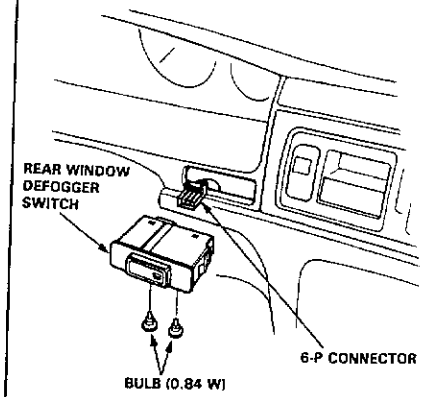

3. Turn the socket 45° counterclockwise to remove either bulb.

Component Location Index

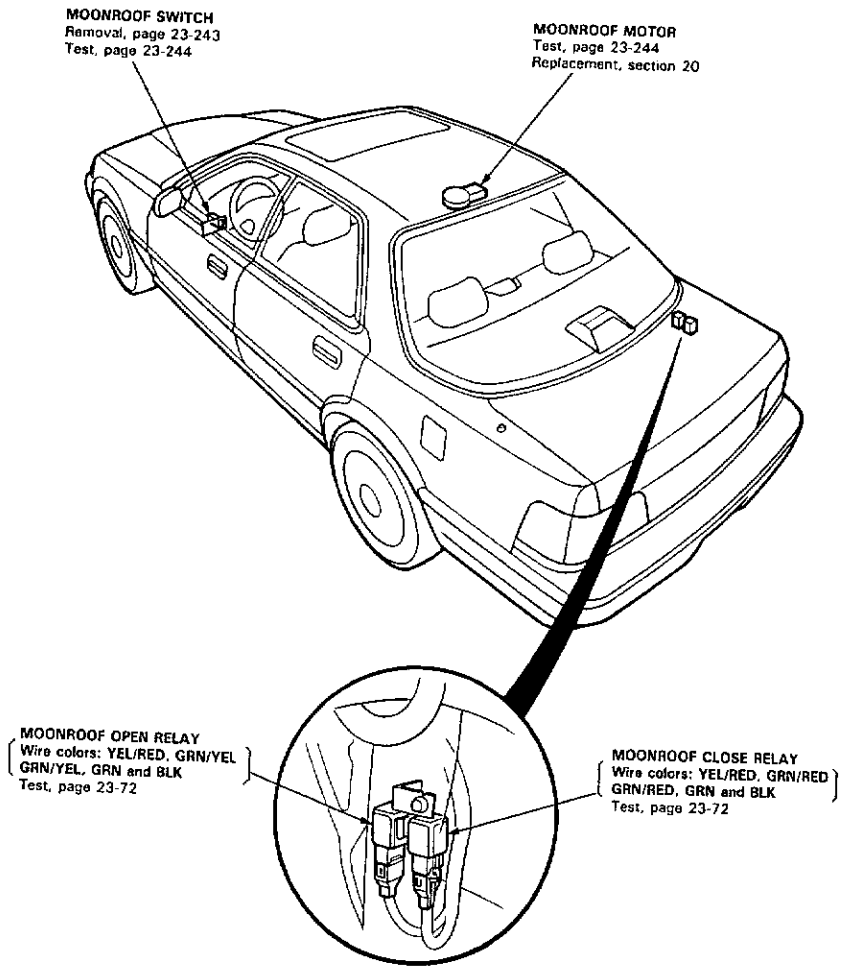

Circuit Diagram

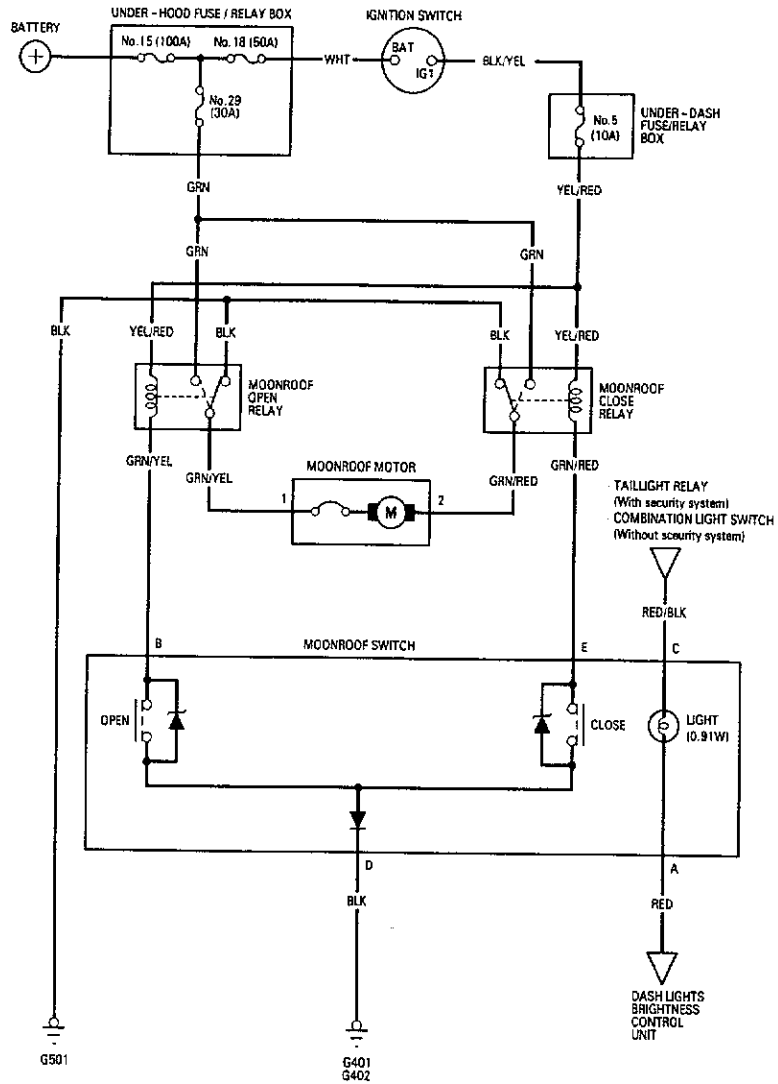

Troubleshooting

NOTE The numbers in the table show the troubleshooting sequence.

Symptom		Clutch out of adjustment, foreign matter stuck between guide rail, moonroof, or outer cable not attached properly.	Blown No. 29 (30 A) fuse (in the under-hood fuse/relay box)	Blown No.5 (10 A) fuse (in the under-dash fuse/relay box)	Function Test	Open relay	Close relay	Moonroof motor	Moonroof switch	Poor ground	Open circuit in wires, loose or disconnected terminals
Moonroof does not move, but motor turns.		1									
Moonroof does not move and motor does not turn (moonroof can be moved with moonroof wrench).	With either switch.		1	2	3			5	4	G401 G402 G501	GRN, YEL/RED, GRN/YEL or GRN/RED
	With OPEN switch.					1	2		3		GRN/YEL or GRN/RED
	With CLOSE switch.					2	1		3		GRN/RED or GRN/YEL

Function Test

NOTE: Be careful not to damage the switch and the dashboard panel.

1. Carefully pry out the switches from the dashboard.
2. Disconnect the connectors from the switches.

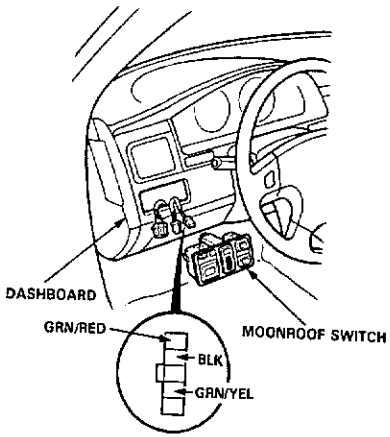

View from wire side

3. Connect the GRN/YEL terminal to body ground with a jumper wire, then turn on the ignition switch. The moonroof should open.
   - If the moonroof opens, check the switch.
   - If not, check for an open in the GRN/YEL wire.
4. Connect the GRN/RED terminal to body ground with a jumper wire, then turn on the ignition switch. The moonroof should close.
   - If the moonroof closes, check the switch.
   - If not, check for open in the GRN/RED wire.
5. Check for continuity to body ground on the BLK wire. There should be continuity.
   - If there is continuity, check the switch.
   - If there is no continuity, check for open in the BLK wire.

Switch Test

1. Carefully remove the switches from the dashboard.
2. Check for continuity between the terminals in each switch position according to the table.

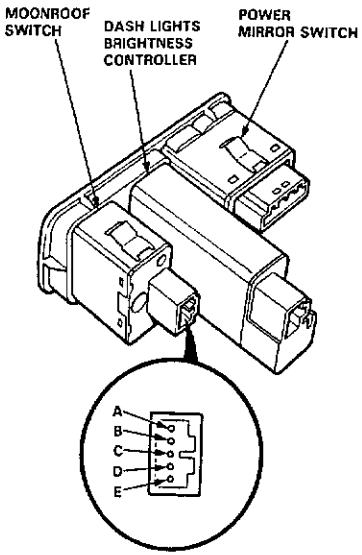

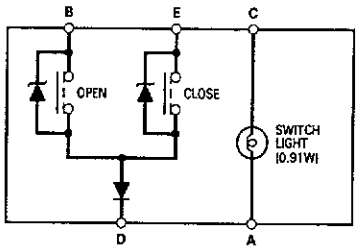

Position \ Terminal	B		D		E	A		C
OFF								
OPEN	○	▶	○			○	⊖	○
CLOSE			○	◀	○			

Motor Test

1. Remove the headliner.
2. Disconnect the 2-P connector from the moonroof motor.
3. Test motor operation by connecting battery power to the No.1 and No.2 terminals. Test the motor in each direction, by switching the leads.
4. If the motor does not run, replace it.

NOTE: See closing force check in section 20 for motor clutch test.

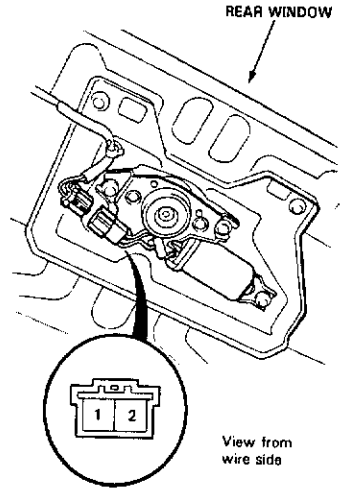

Component Location Index

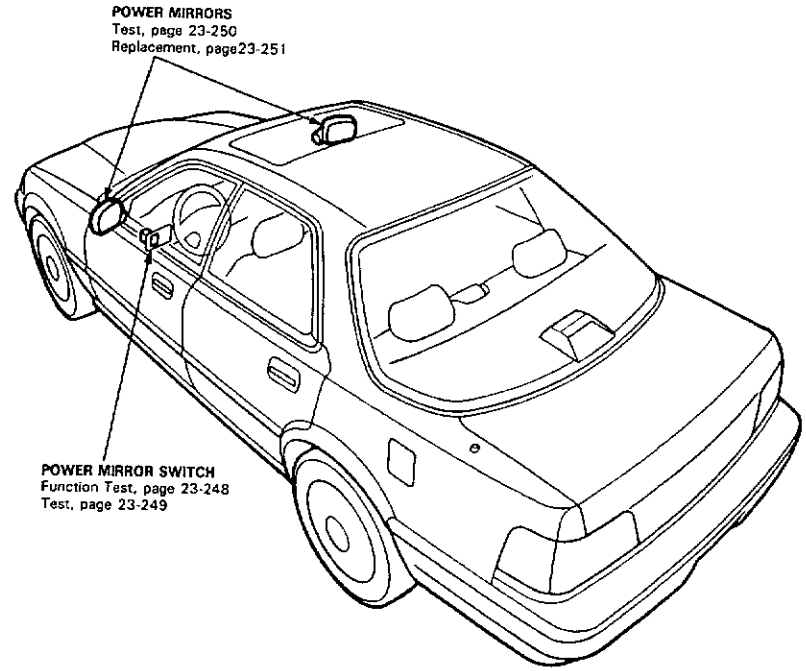

Circuit Diagram (Without Defogger)

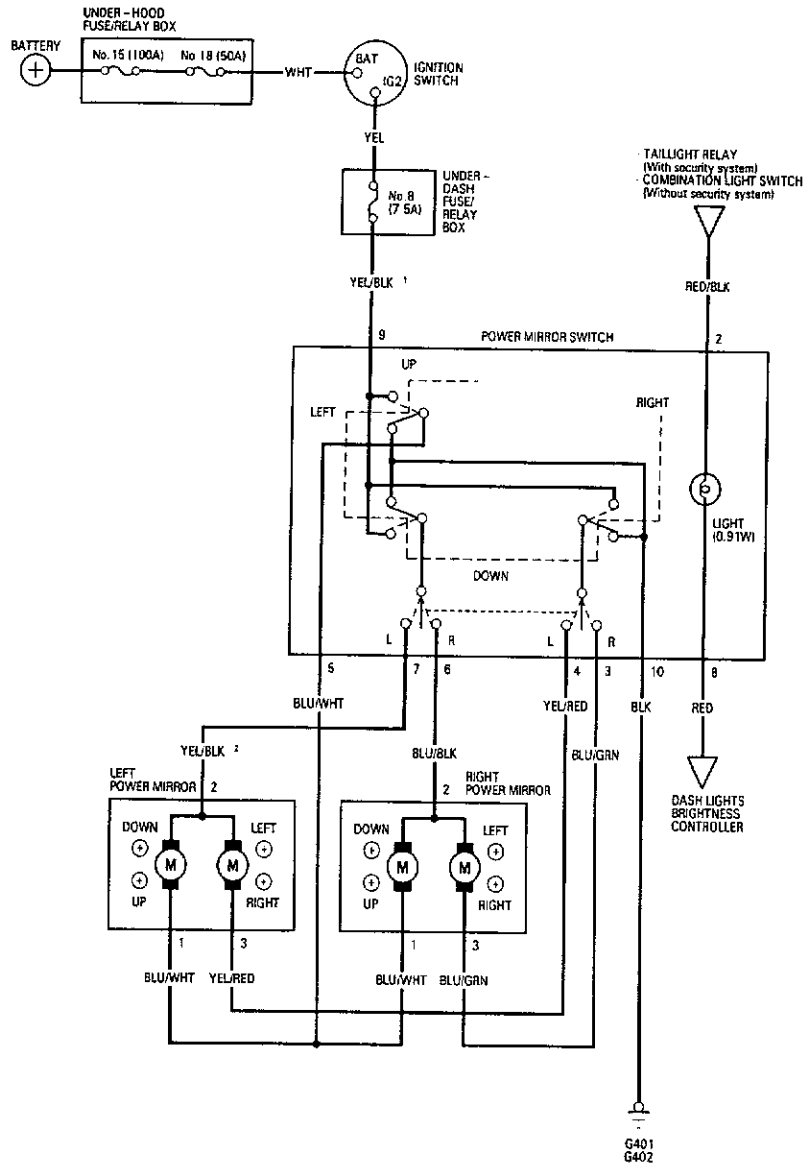

Circuit Diagram (With Defogger)

• POWER MIRROF DEFOGGER RELAY
Test, page 23 – 71

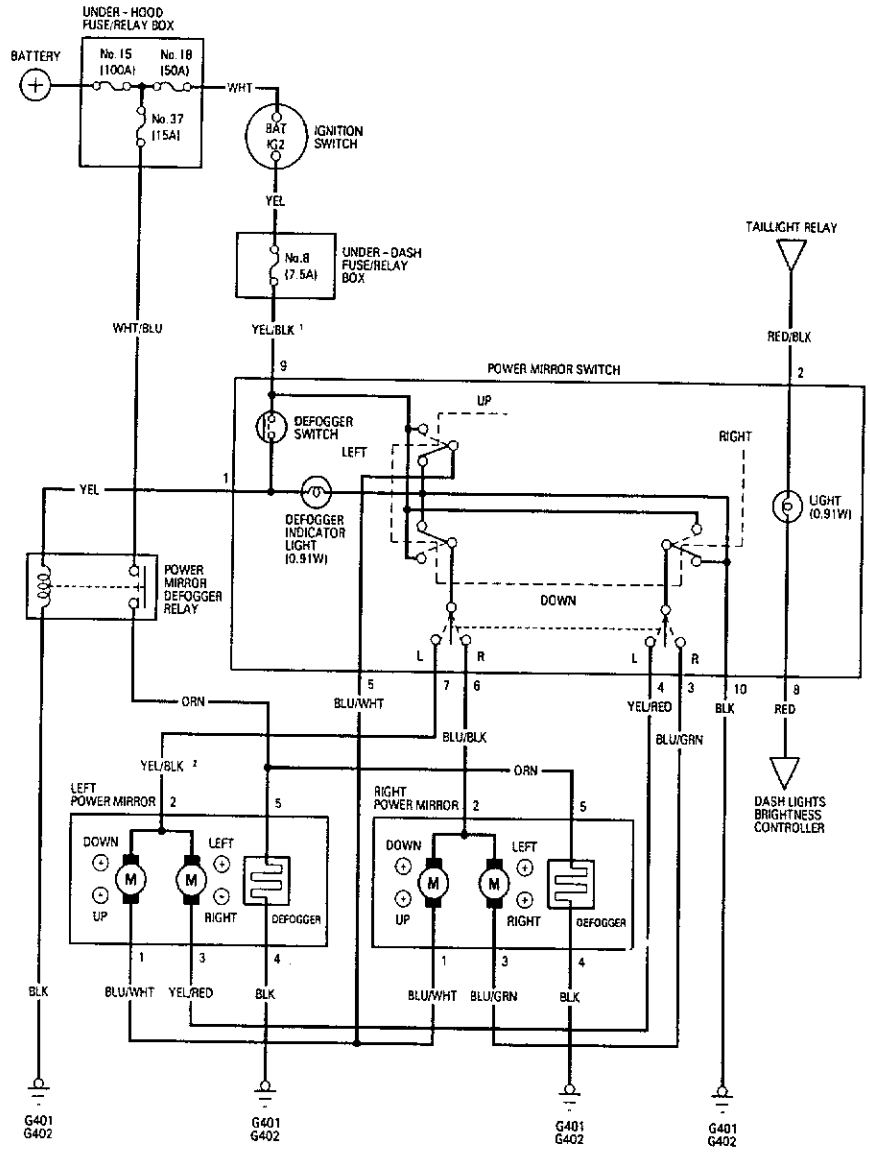

Function Test

NOTE: Be careful not to damage the switches and the dashboard.

1. Carefully pry out the switches from the dashboard.
2. Disconnect the connectors from the switches.

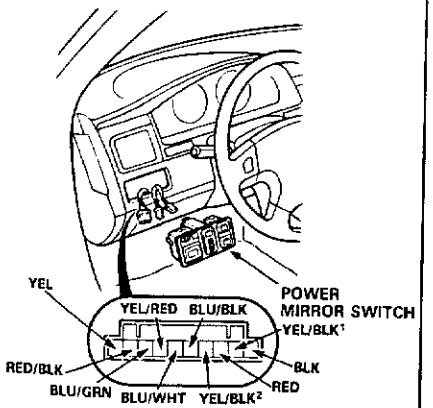

View from wire side.

Mirror Test

One or both inoperative:

1. Check for voltage between the YEL/BLK¹ terminal and body ground with the ignition switch ON. There should be battery voltage.
   - If there is no voltage, check for:
     - Blown No.8 (7.5A) fuse in the under-dash fuse/relay box.
     - An open in the BLK/YEL wire.
   - If there is battery voltage, go to step 2.
2. Check for continuity between the BLK terminal and body ground. There should be continuity.
   - If there is no continuity, check for:
     - An open in the BLK wire.
     - Poor ground (G401,G402).

Left mirror inoperative:

Connect the YEL/BLK¹ terminal of the 10-P connector to the YEL/BLK² terminal and the BLU/WHT (or YEL/RED) terminal to body ground with jumper wires. The left mirror should tilt down (or swing left) when the ignition switch is turned ON.

- If the mirror does not tilt down (or does not swing left), remove the left door panel and check for an open in the BLU/WHT (or YEL/RED) wire between the left power mirror and the switch.

If the wire is OK, check the left power mirror motor.

- If the mirror neither tilts down nor swings left, repair the YEL/BLK² wire.
- If the mirror operates properly, check the mirror switch.

Right mirror inoperative:

Connect the YEL/BLK¹ terminal of the 10-P connector to the BLU/BLK terminal and the BLU/WHT (or BLU/GRN) terminal to body ground with jumper wires. The right mirror should tilt down (or swing left) when the ignition switch is turned ON.

- If the mirror does not tilt down (or does not swing left), remove the right door panel and check for an open in the BLU/WHT (or BLU/GRN) wire between the right power mirror and the switch.

If the wire is OK, check the right power mirror motor.

- If the mirror neither tilts down nor swings left, repair the BLU/BLK wire.
- If the mirror operates properly, check the mirror switch.

Defogger test (With defogger)

1. Connect the YEL/BLK¹ with the YEL terminal of the switch and the YEL terminal of the relay with the BLK terminal by jumper wires. There should be battery voltage when the ignition switch is turned ON.
   - If there is no voltage, check for:
     - An open in the YEL wire.
     - Poor ground (G401, G402).
   - If there is voltage, go to step 2.
2. Connect the WHT/BLU and ORN terminals of the relay with a jumper wire and check for voltage between the WHT/BLU terminal and body ground. There should be battery voltage and both mirrors should warm up with the ignition and defogger switches turned ON.
   - If there is no voltage or neither warms up, check for:
     - An open in the WHT/YEL and ORN wires.
     - Blown No.37 (15A) in the under-hood fuse/relay box.
     - Poor ground (G401, G402).
   - If only one fails to warm up, check its defogger.
   - If both fail to warm up, check the defogger switch and defogger relay.

Switch Test

1. Remove the switch as described in function test (see page 23-248).
2. Check for continuity between the terminals in each switch position according to the table.

Mirror Switch

Position	Terminal	9	10	5	4	7	3	6
R	OFF		○	○			○	○
	UP	○		○				
			○				○	○
	DOWN	○					○	○
			○	○				
	LEFT	○		○				○
			○				○	
	RIGHT	○					○	
			○	○				○
L	OFF		○	○	○	○		
	UP	○		○				
			○		○	○		
	DOWN	○			○	○		
			○	○				
	LEFT	○		○		○		
			○		○			
	RIGHT	○			○			
			○	○		○		

Defogger Switch (With Defogger)

Position \ Terminal	9	1		10
ON	○	○	⊗	○
OFF	○		⊗	○

Switch Light

Position \ Terminal	2		8
ON/OFF	○	⊗	○

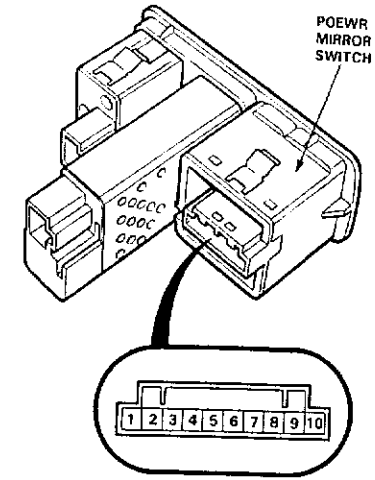

Without defogger model:

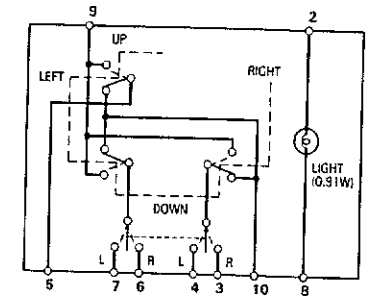

With defogger model:

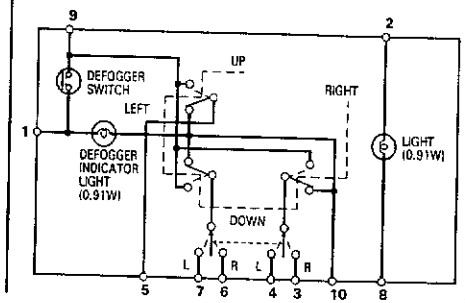

Door Mirror Test

1. Remove the cover panel, then disconnect the 3-P connector and 2-P connector (with defogger) from the power mirror actuator.
2. Check actuator operation by connecting power and ground according to the table.

TILT:

Position \ Terminal	1	2
UP	⊕	⊖
DOWN	⊖	⊕

SWING:

Position \ Terminal	2	3
LEFT	⊕	⊖
RIGHT	⊖	⊕

3. Check for continuity between the terminals according to the table.

With defogger model:

Position \ Terminal	4	5
ON	○	○

4. If the mirror fails to operate properly, replace it.

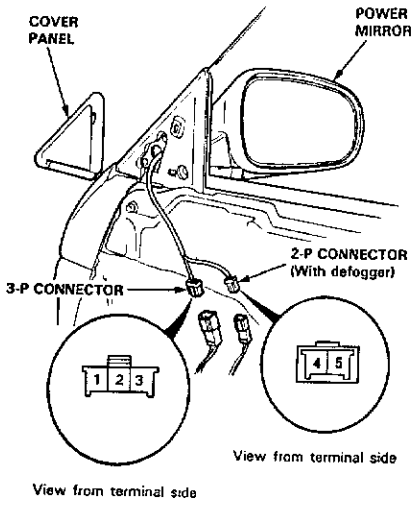

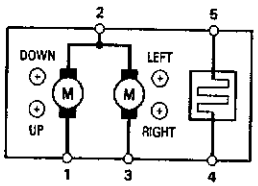

Power Mirror Replacement

1. Carefully pry out the cover panel with a flat tip screwdriver.
2. Remove the door panel.
3. Disconnect the 3-P connector and 2-P connector (with defogger) from the mirror.
4. While holding the mirror with one hand, remove its mounting screws with the other.

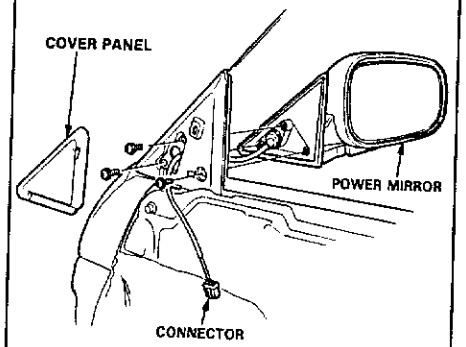

Component Location Index

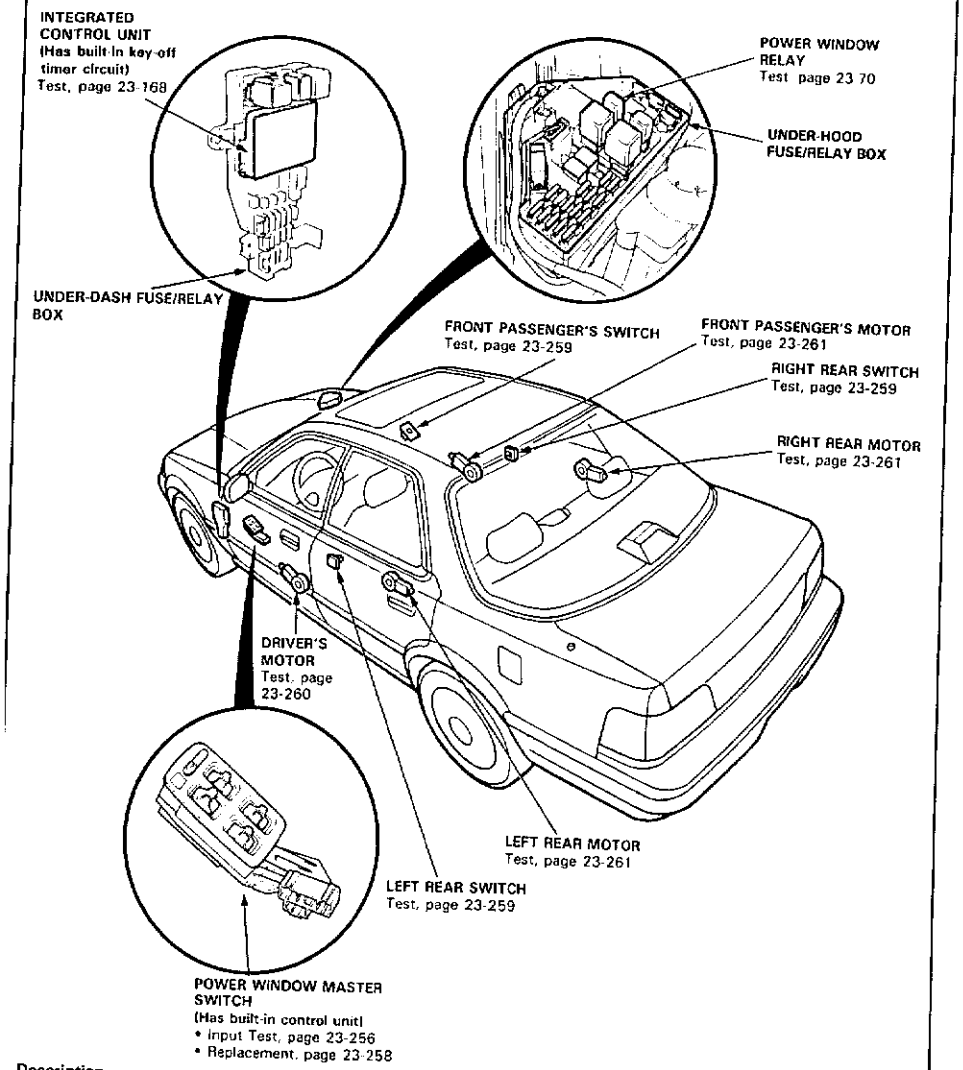

Description

Power Window Key-off Timer Operation:
The power windows can still be operated for about 10 minutes after the ignition switch is turned from the " II " to the " I " or " O " position, as long as neither of the front doors has been opened. This provides a convenience to parked occupants while offering a degree of security against unwanted or accidental window operation.

Circuit Diagram

NOTE:
- Different wires with the same color have been given a number suffix to distinguish them (for example, BLU/RED[1] and BLU/RED[2] are not the same).
- "DN" in the switch circuit denotes DOWN.

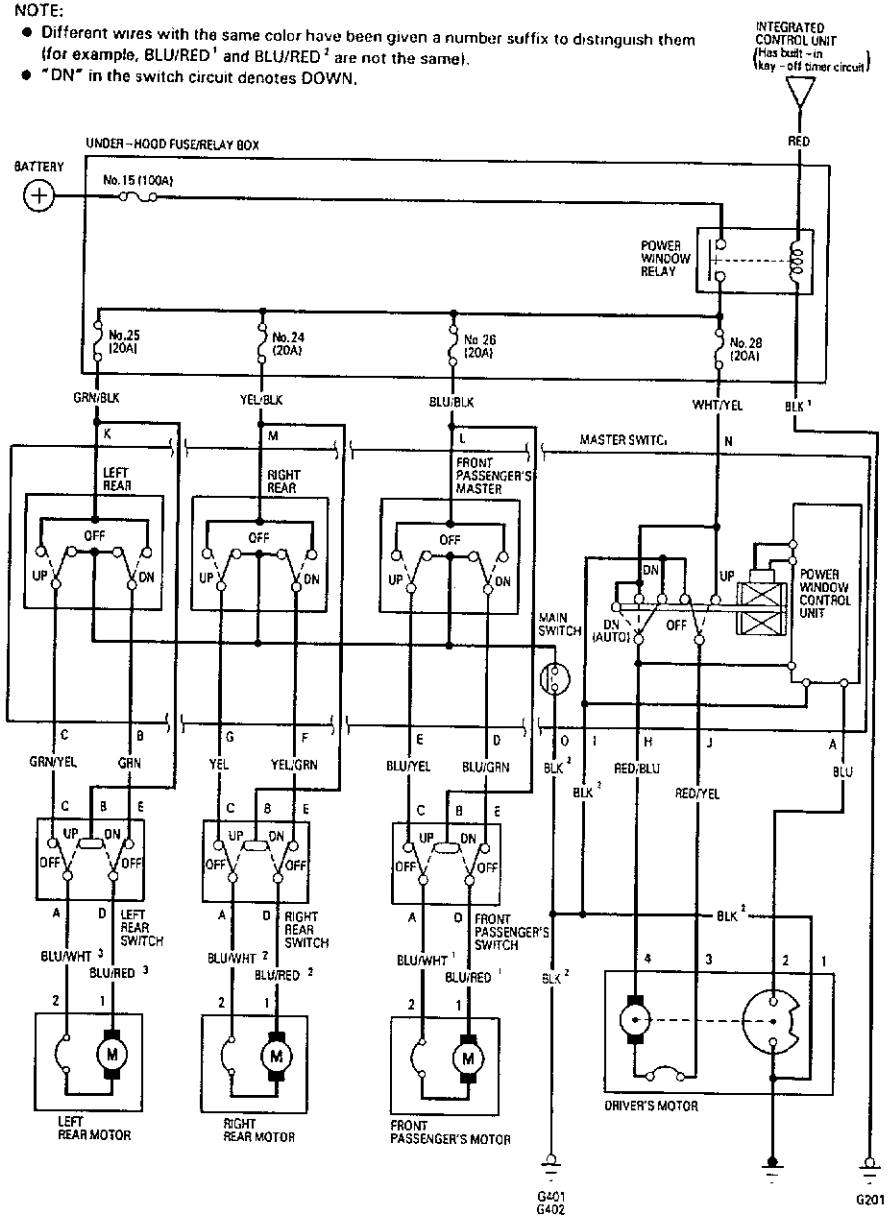

Troubleshooting

NOTE: The numbers in the table show the troubleshooting sequence.

Symptom \ Item to be inspected		Blown No. 15 (100 A) fuse (in the under-hood fuse/relay box)	Blown No. 37 (15 A) fuse (in the under-hood fuse/relay box)	Power window realy	Blown No.28 (20 A) fuse (In the under-hood box)	Blown No.26 (20 A) fuse (In the under-hood box)	Blown No.24 (20 A) fuse (In the under-hood box)	Blown No.25 (20 A) fuse (In the under-hood box)	Power window master switch	Passenger's switch	Driver's motor	Pulser (In driver's motor)	Passenger's motor	Window regulator	Power window master switch input	Door switches	Key-off timer circuit (In the integrated control unit)	Poor ground	Open circuit wires, loose or disconnected terminals
All windows do not work.		1	2	3													4	G201 G401 G402	RED
Driver's window does not work.					1						2			3	4			G401 G402	WHT/YEL
Driver's window does not work in AUTO.									1			2			3				BLU
Passenger's windows do not work.	Front Passenger's					1			2	3			4	5					BLU/BLK
	Left rear							1	2	3			4	5					GRN/BLK
	Right rear						1		2	3			4	5					YEL/BLK
All windows do not operate within 10 minutes after the ignition switch is OFF.			1													2	3		

Power Window Master Switch Test

1. Remove the switch from the driver's door panel
2. Check for continuity between the terminals in each switch position according to the tables.

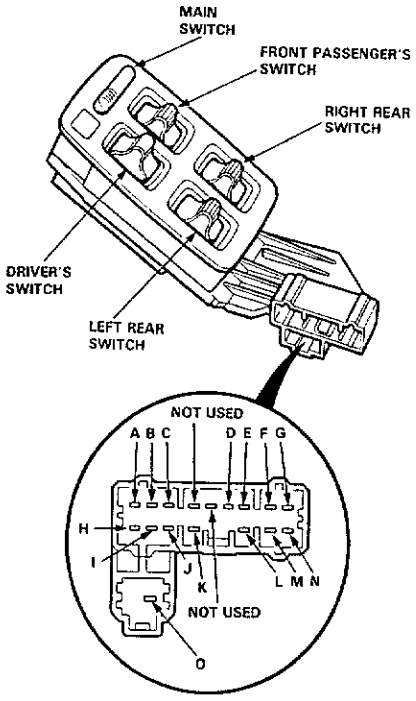

Driver's Switch

Position \ Terminal	N	J	I	H
OFF		○	○	○
UP	○			○
DOWN	○	○		
DOWN (AUTO)	○	○		

Front Passenger's Switch

Position	Main Switch \ Terminal	D	E	L	O
OFF	ON	○	○		○
	OFF	○	○		
UP	ON		○	○	
	OFF		○	○	
DOWN	ON	○		○	
	OFF	○		○	

Right Rear Switch

Position	Main Switch \ Terminal	F	G	M	O
OFF	ON	○	○		○
	OFF	○	○		
UP	ON		○	○	
	OFF		○	○	
DOWN	ON	○		○	
	OFF	○		○	

Left Rear Switch

Position	Main Switch \ Terminal	B	C	K	O
OFF	ON	○	○		○
	OFF	○	○		
UP	ON		○	○	
	OFF		○	○	
DOWN	ON	○		○	
	OFF	○		○	

Master Switch Input Test

NOTE: The control unit is built into the power window master switch, and only controls driver's door window operation.

1. Remove the driver's door panel and disconnect the 16 P and 2 P connectors from the power window master switch.

Inspect the connector terminals to be sure they are all making good contact.

- If the terminals are bent, loose or corroded, repair them as necessary, and recheck the system.
- If the terminals look OK, make the following input tests at the connector.
  - If any test indicates a problem, find and correct the cause, then recheck the system.
  - If all the input tests prove OK, the switch must be faulty; replace it.

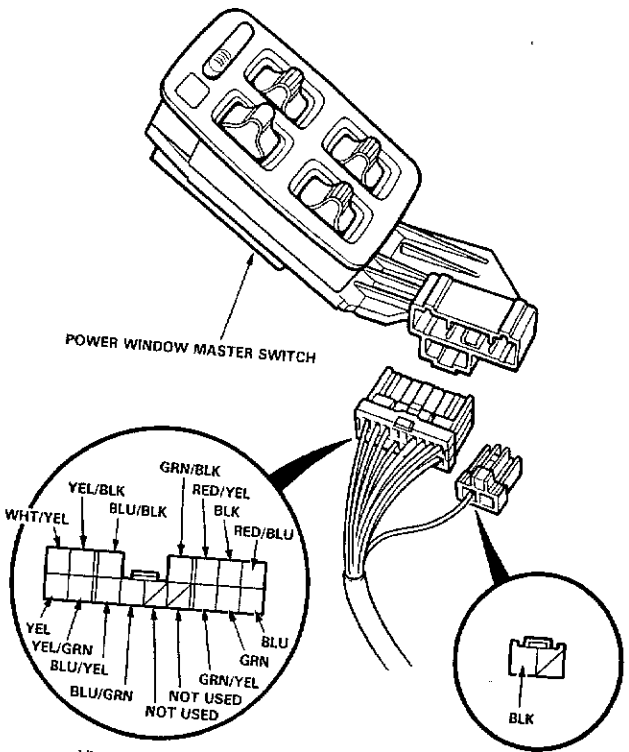

View from wire side.

View from wire side.

No.	Terminal	Test condition	Test: Desired result	Possible cause if result is not obtained
1	BLK²	Under all conditions.	Check for continuity to gound There should be continuity	• Poor ground (G401, G402) • An open in the wire.
2	WHT/YEL BLU/BLK YEL/BLK GRN/BLK	Ignition switch ON.	Check for voltage to ground: There should be battery voltage.	• Blown No. 24, 25, 26 or 28 (20 A) fuse (in the under-hood fuse/relay box). • Faulty power window relay • An open in the wire.
3	RED/BLU and RED/YEL	Connect the WHT/YEL terminal to the RED/BLU terminal, and the RED/YEL terminal to the BLK² terminal, then turn the ignition switch ON.	Check the driver's motor operation: It should run.	• Faulty driver's motor. • An open in the wire.
4	BLU/YEL and BLU/GRN	Connect the BLU/BLK terminal to the BLU/YEL terminal, and the BLU/GRN terminal to the BLK² terminal, then turn the ignition switch ON.	Check the front passenger's motor operation: It should run.	• Faulty front passenger's motor. • Faulty front passenger's switch. • An open in the wire.
5	YEL and YEL/GRN	Connect the YEL/BLK terminal to the YEL/GRN terminal, and the YEL terminal to the BLK² terminal, then turn the ignition switch ON.	Check the right rear motor operation: It should run (the window moves down).	• Faulty right rear motor. • Faulty right switch • An open in the wire.
6	GRN/YEL and GRN	Connect the GRN/BLK terminal to the GRN terminal, and the GRN/YEL terminal to the BLK² terminal, then turn the ignition switch ON.	Check the left rear motor operation: It should run (the window moves down).	• Faulty left rear motor. • Faulty left rear switch. • An open in the wire.
7	BLU and BLK²	Connect the WHT/YEL terminal to the RED/YEL terminal, and the BLK² terminal to the RED/BLU terminal, then turn the ignition switch ON.	Check for resistance between the BLU and BLK² terminals: Between 20-50 ohms should be indicated as the driver's motor runs.	• Faulty pulser. • Faulty driver's motor. • An open in the wire.

Master Switch Replacement

1. Remove the driver's door panel, and disconnect all connectors.
2. Remove the power window master switch from the door panel by unscrewing the mounting screws.

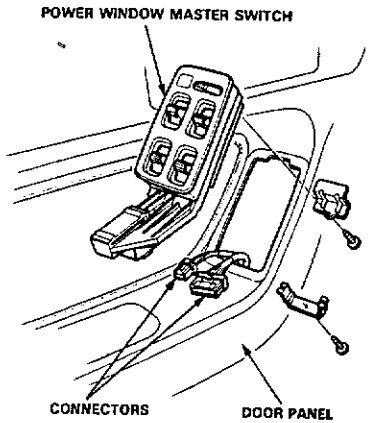

3. Install in the reverse order of removal.

Passenger's Switch Replacement

1. Remove the door panel and disconnect the 5-P connector.
2. Remove the switch from the door panel by removing the mounting the screw.

   NOTE: The illustration shows the front passenger's switch.

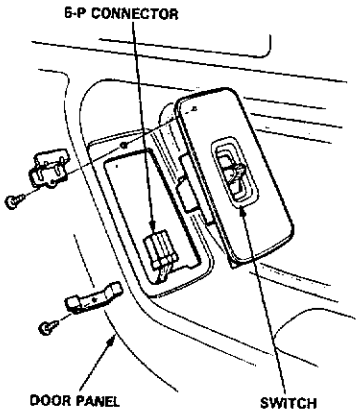

3. Install in the reverse order of removal.

Passenger's Switch Test

1. Remove the door panel, and disconnect all connectors.
2. Remove the switch from the door panel by unscrewing the mounting screw.
3. Check for continuity between the terminals in each switch position according to the table.

   NOTE: The front passenger's switch is shown. The rear switches are similar.

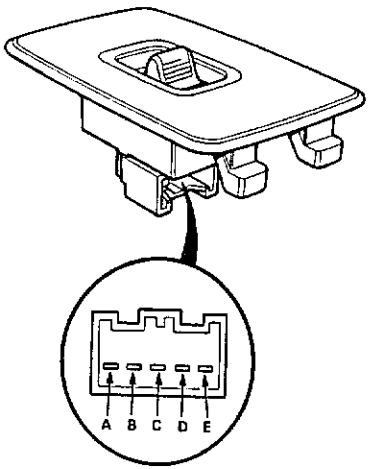

Position \ Terminal	B	E	C	D	A
UP	○				○
		○		○	
OFF		○		○	
			○		○
DOWN	○			○	
			○		○

Driver's Motor Test

Motor Test:

1. Remove the door panel.
2. Disconnect the 4-P connector from the driver's door wire harness.
3. Check motor operation by connecting power and ground according to the table.

Terminal / Position	1	2
UP	⊕	⊖
DOWN	⊖	⊕

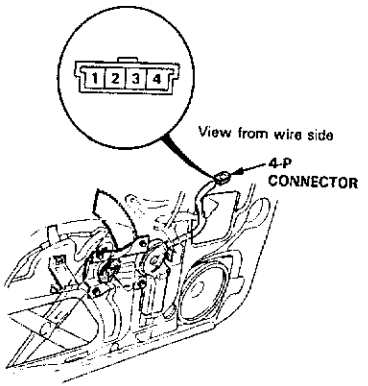

4. If the motor does not run, replace it.

Pulser Test:
Connect the test leads of an analog ohmmeter to the No.1 and No.2 terminals and check for needle movement while running the motor by applying battery voltage to the No.3 and No.4 terminals.
The analog ohmmeter needle should move back and forth alternately.

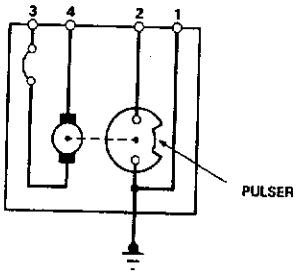

Passenger's Motor Test

1. Remove the door panel.
2. Disconnect the 2-P connector from the motor.
3. Check motor operation by connecting power and ground according to the table.

Terminal / Position	1	2
UP	⊖	⊕
DOWN	⊕	⊖

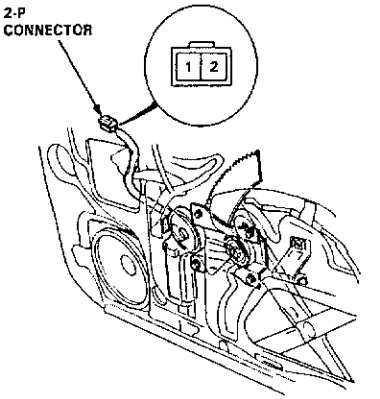

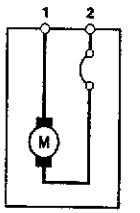

4. If the motor does not run, replace it.

Component Location Index

CAUTION:
- All SRS electrical wiring harnesses are covered with yellow outer insulation.
- Before disconnecting the SRS wire harness, install the short connector (s) on the airbag (s).
- Replace the entire affected SRS harness assembly if it has an open circuit or damaged wiring.

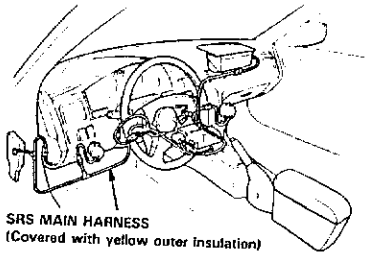

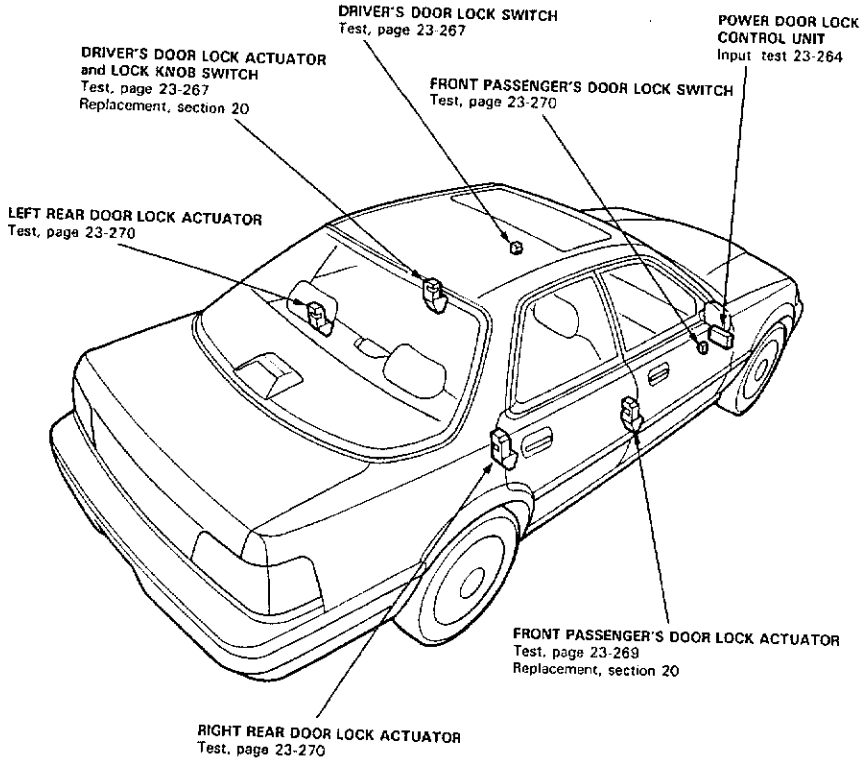

Circuit Diagram

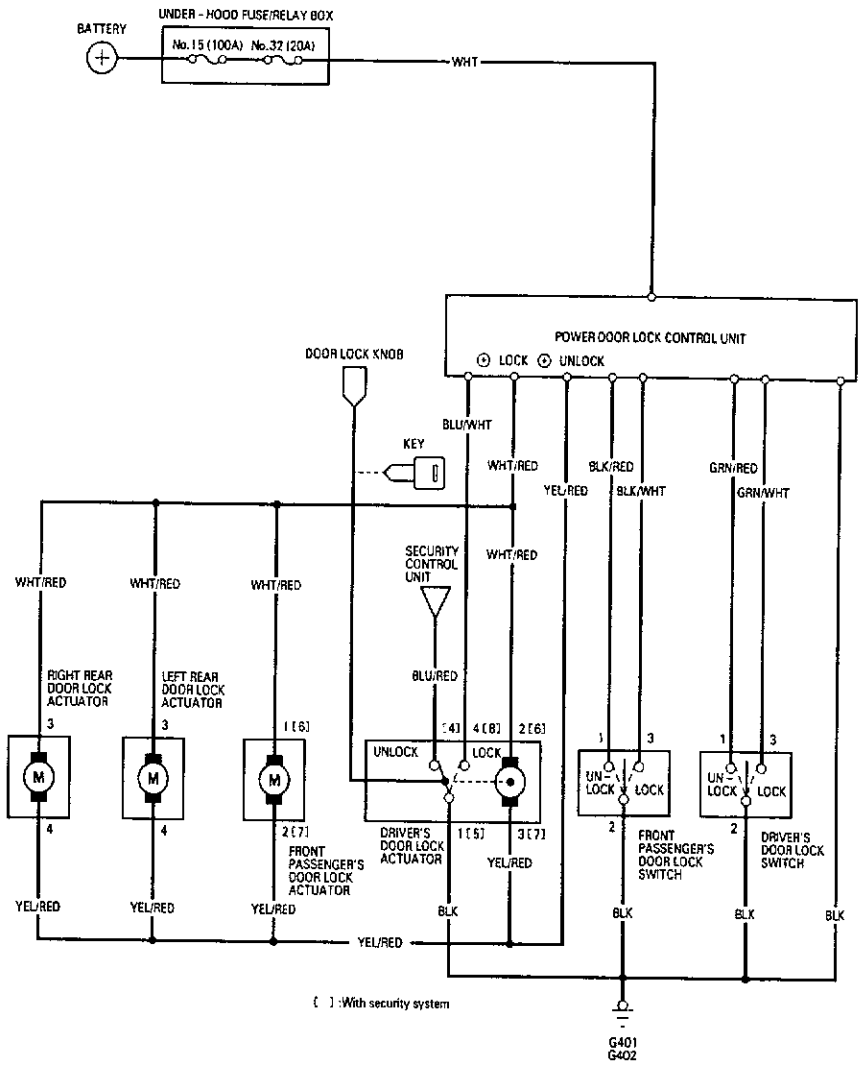

Control Unit Input Test

CAUTION:
- All SRS electrical wiring harnesses are covered with yellow outer insulation.
- Before disconnecting the SRS wire harness, install the short connector (s) on the airbag (s).
- Replace the entire affected SRS harness assembly if it has an open circuit or damaged wiring.

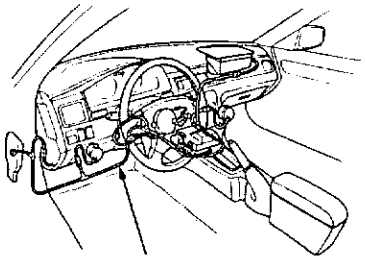

SRS MAIN HARNESS
(Covered with yellow outer insulation)

Remove the glove box, then disconnect the 12-P connector from the control unit.

Inspect the connector terminals to be sure they are all making good contact.

- If the terminals are bent, loose or corroded, repair them as necessary, and recheck the system.
- If the terminals look OK, make the following input tests at the connector.
  - If any test indicates a problem, find and correct the cause, then recheck the system.
  - If all the input tests prove OK, the control unit must be faulty; replace it.

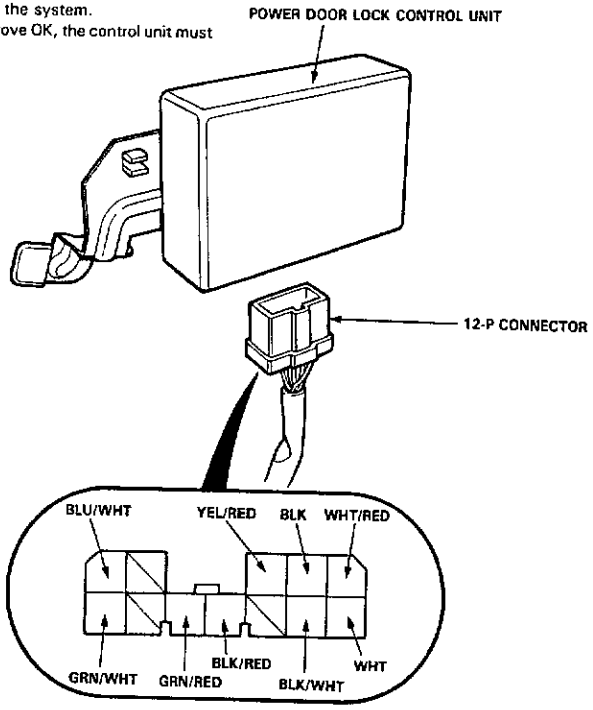

View from wire side

No.	Terminal	Test condition	Test: Desired result	Possible cause if result is not obtained
1	BLK	Under all conditions.	Check for continuity to gound: There should be continuity.	• Poor ground (G401, G402) • An open in the wire.
2	WHT	Under all conditions.	Check for voltage to ground: There should be continuity.	• Blown No. 32 (20 A) fuse (in the under-hood fuse/relay box). • An open in the wire.
3	GRN/WHT	Move the driver's power door lock switch from the neutral position to LOCK.	Check for voltage to ground: There should be less than 1V.	• Faulty driver's power door lock switch. • Poor ground (G401, G402). • An open in the wire. • Short to ground. • Faulty control unit.
4	GRN/RED	Move the driver's power door lock switch from the neutral position to UNLOCK.		
5	BLK/RED	Move the front passenger's power door lock switch from the neutral position to LOCK.	Check for voltage to ground: There should be less than 1V.	• Faulty front passenger's power door lock switch. • Poor ground (G401, G402). • An open in the wire. • Short to ground. • Faulty control unit.
6	BLK/RED	Move the front passenger's power door lock switch from the neutral position to UNLOCK.		
7	BLU/WHT	Driver's door lock knob in LOCK.	Check for voltage to ground: There should be less than 1V.	• Faulty driver's door actuator. • Poor ground (G401, G402) • An open in the wire.
		Driver's door lock knob in UNLOCK.	Check for voltage to ground: There should be battery voltage.	• Faulty driver's door actuator. • Short to ground. • Faulty control unit.
8	WHT/RED or YEL/RED	Connect the WHT terminal to the WHT/RED terminal, and the YEL/RED terminal to the BLK terminal momentarily.	Check door lock operation: All doors should lock as the battery is connected momentarily.	• Faulty passenger's door actuator. • Faulty driver's door actuator. • An open in the wire.
		Connect the WHT terminal to the YEL/RED terminal, and the WHT/RED terminal to the BLK terminal momentarily.	Check door unclok operation: All doors should unlock as the battery is connected mementarily.	

CAUTION: To prevent damage to the motor, apply battery voltage momentarily.

Troubleshooting

NOTE: The numbers in the table show the troubleshooting sequence.

Symptom	Item to be inspected	Blown No. 32 (20 A) fuse (in the under-hood fuse/relay box)	Door lock knob switch (in the driver's door actuator)	Control unit input	Passenger's door actuator	Disconnected or obstructed door lock rod/linkage	Driver's power door lock switch	Passenger's power door lock switch	Poor ground	Open circuit wires, loose or disconnected terminals
Power door lock system does not work at all.		1		2					G401 G402	WHT
Doors do not lock with driver's door lock knob switch.	All doors.					1				
	All passenger's doors.	1	2	3		4			G401 G402	BLU/WHT, YEL/RED or WHT/RED
	One or more doors.				1					YEL/RED or WHT/RED
Doors do not lock or unlock with driver's power door lock switch.	All doors.	1		3		4	2		G401 G402	GRN/RED, GRN/WHT YEL/RED or WHT/RED
	One or more doors.				1					YEL/RED or WHT/RED
Doors do not lock or unlock with front passenger's power door lock switch.	All doors.	1		3		4		2	G401 G402	BLK/RED, BLK/WHT, YEL/RED or WHT/RED
	One or more doors.				1					YEL/RED or WHT/RED

CAUTION: To prevent damage to the motor, apply battery voltage momentarily.

Driver's Door Actuator Test (With Security System)

1. Remove the door panel.
2. Disconnect the 8-P connector from the actuator.
3. Check actuator operation by connecting power and ground according to the table.

Position \ Terminal	6	7
LOCK	⊕	⊖
UNLOCK	⊖	⊕

CAUTION: To prevent damage to the motor, only apply battery voltage momentarily.

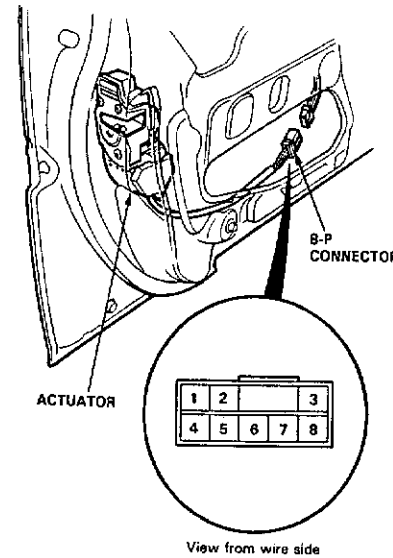

4. If the actuator fails to operate properly, replace it.
5. Check for continuity between the terminals in each switch position according to the table.

Position \ Terminal	8	5	4
LOCK	○	○	
UNLOCK		○	○

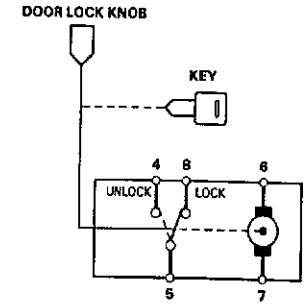

Driver's Door Actuator (Without Security System)

1. Remove the door panel.
2. Disconnect the 4-P connector from the actuator.
3. Check actuator operation by connecting power and ground according to the table.

Terminal / Position	2	3
LOCK	⊕	⊖
UNLOCK	⊖	⊕

CAUTION: To prevent damage to the motor, only apply battery voltage momentarily.

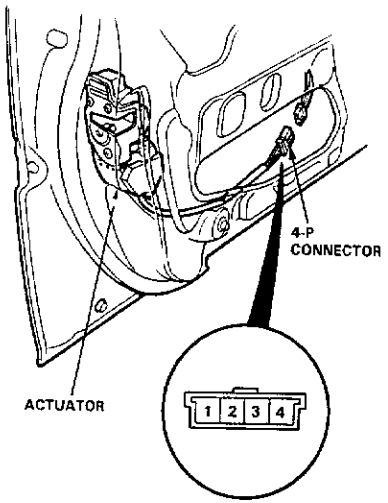

View from wire side

4. If the actuator fails to operate properly, replace it.

5. Check for continuity between the terminals in each switch position according to the table.

Terminal / Position	1	4
LOCK	○	○
UNLOCK		

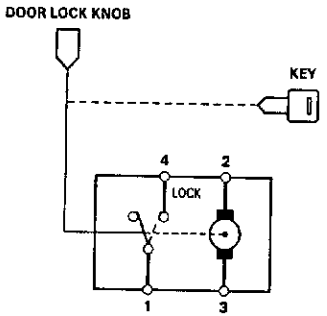

Front Passenger's Door Actuator Test

With Security System:

1. Remove the door panel.
2. Disconnect the 8-P connector from the actuator.
3. Check actuator operation by connecting power and ground according to the table.

Terminal / Position	6	7
LOCK	⊕	⊖
UNLOCK	⊖	⊕

CAUTION: To prevent damage to the motor, only apply battery voltage momentarily.

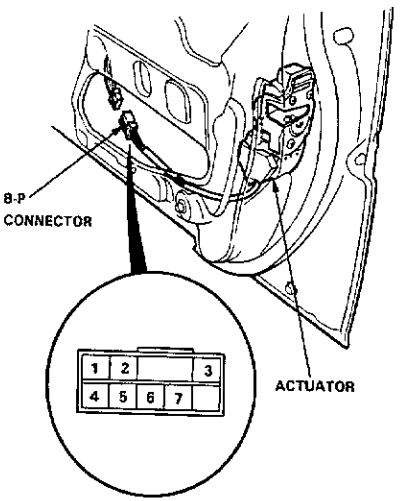

View from wire side

4. If the actuator fails to operate properly, replace it.

Without Security System:

1. Remove the door panel.
2. Disconnect the 2-P connector from the actuator.
3. Check actuator operation by connecting power and ground according to the table.

Terminal / Position	1	2
LOCK	⊕	⊖
UNLOCK	⊖	⊕

CAUTION: To prevent damage to the motor, apply battery voltage momentarily.

NOTE: Right front actuator shown, rear actuators similar.

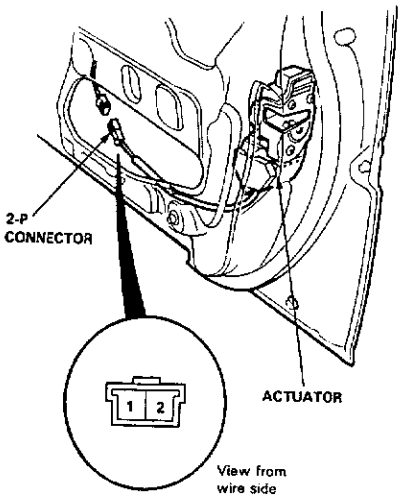

View from wire side

4. If the actuator fails to operate properly, replace it.

Rear Door Lock Actuator Test

1. Remove the door panel.
2. Disconnect the 4-P connector from the actuator.
3. Check actuator operation by connecting power and ground according to the table.

Position \ Terminal	3	4
LOCK	⊕	⊖
UNLOCK	⊖	⊕

CAUTION: To prevent damage to the motor, only apply battery voltage momentarily.

NOTE: The illustration shows right rear door.

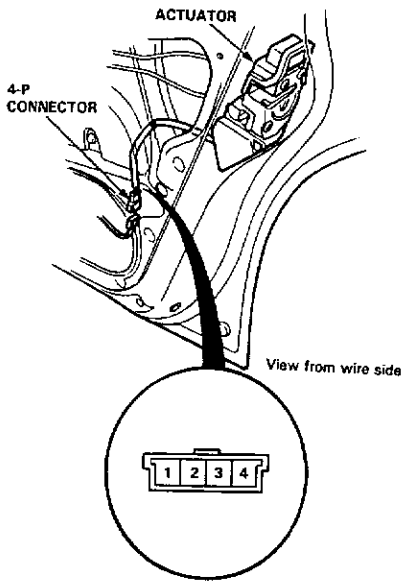

4. If the actuator fails to operate properly, replace it.

Door Lock Switch Test

1. Remove the inside handle trim plate with switch.

   NOTE: The illustration shows front passenger's door.

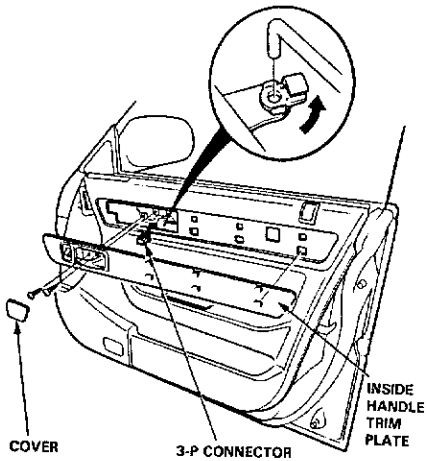

2. Disconnect the 3-P connector of the switch.
3. Check for continuity between the terminals in each switch position according to the table.

Position \ Terminal	3	2	1
UNLOCK		○—○	
OFF			
LOCK	○—○		

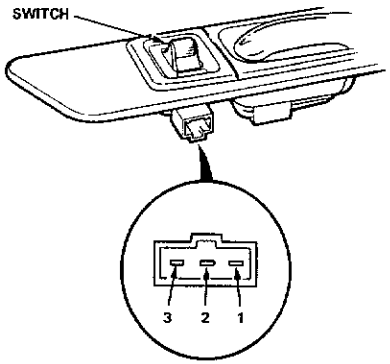

Component Location Index

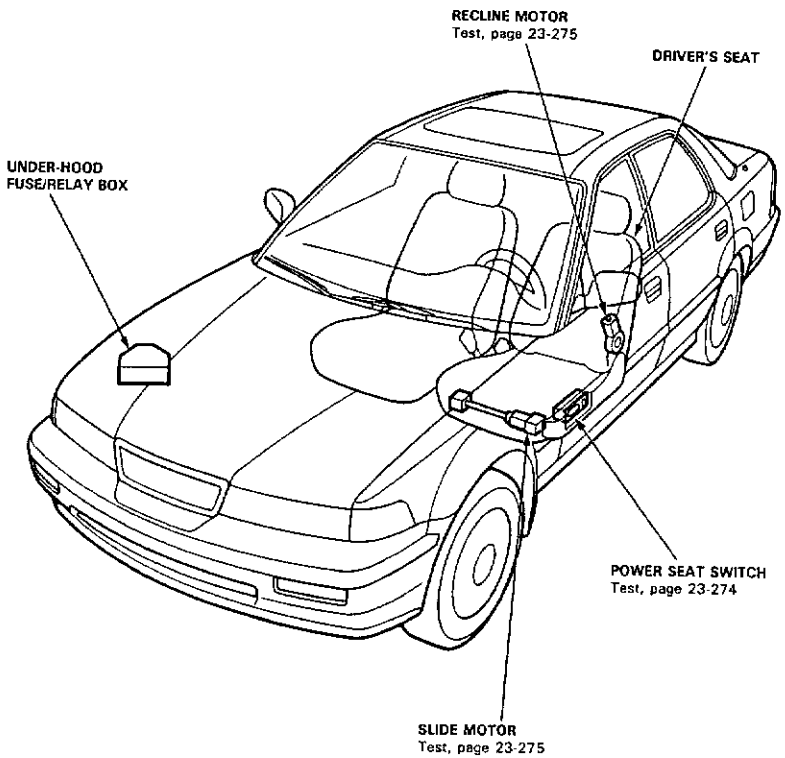

Circuit Diagram

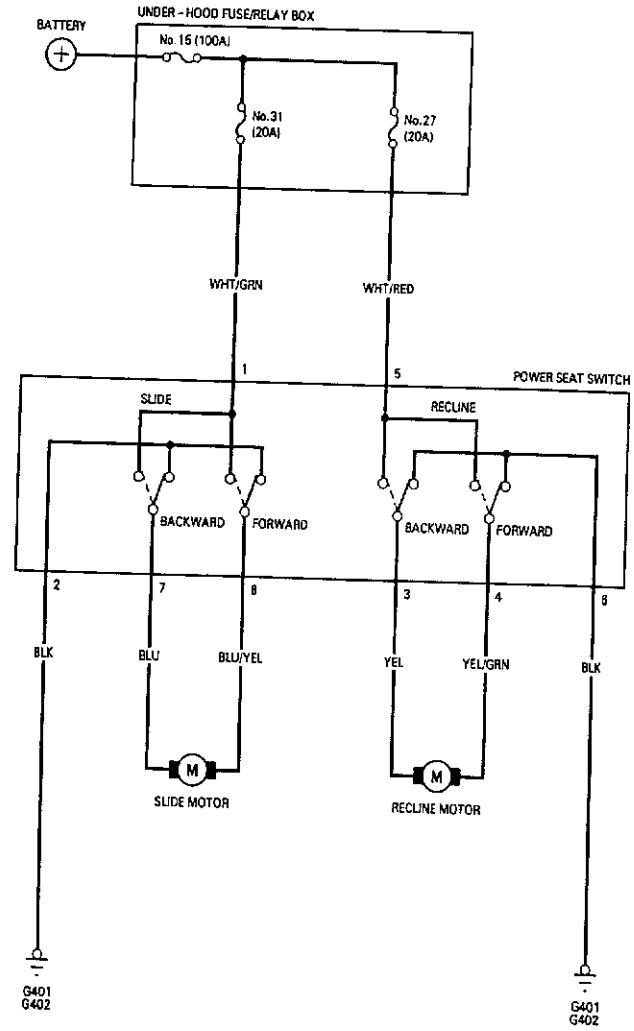

Seat Switch Test

CAUTION: Be careful not to damage the seats, the interior trim or the body.

1. Remove the two screws, then remove the power seat switch from the power seat.
2. Disconnect the 6-P connectors from each switch.
3. Check for continuity between the terminals in each switch position according to the table.

Position \ Terminal		1	2	3	4	5	6	7	8
SLIDE	FORWARD	○							○
	NEUTRAL		○					○	○
	BACKWARD	○						○	
RECLINE	FORWARD				○	○			
	NEUTRAL			○	○		○		
	BACKWARD			○		○			

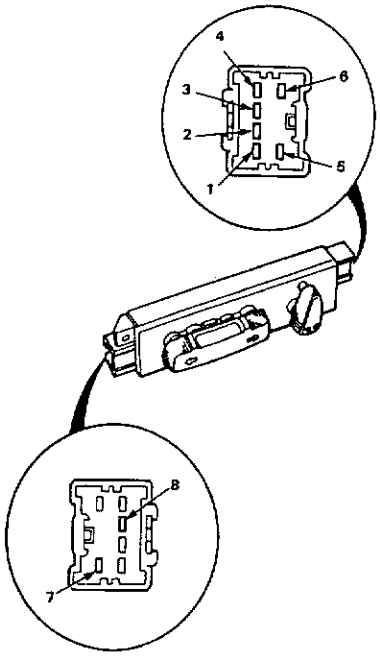

Motor Test

CAUTION: Be careful not to damage the seats, the interior trim or the body.

1. Remove the power seat, then disconnect the 2-P connector from the slide motor.
2. Remove the two screws, then remove the power seat switch from the power seat.
3. Disconnect the 6-P connector from the recline switch.

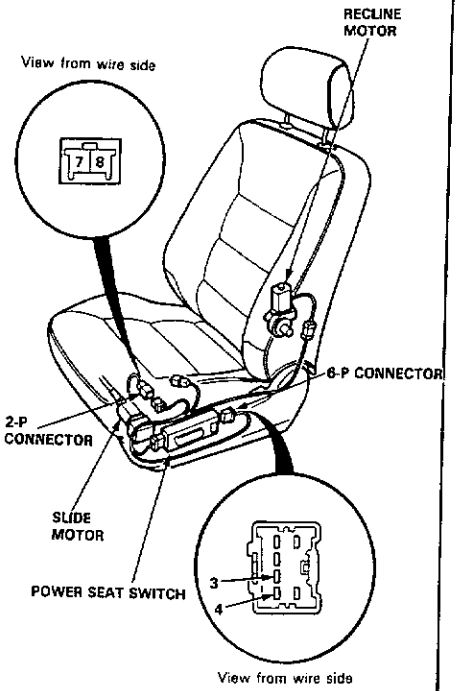

4. Check motor operation by connecting power and ground according to the table.

CAUTION: When the motor stops running, disconnect a battery terminal immediately.

SLIDE MOTOR:

Position \ Terminal	7	8
FORWARD	⊖	⊕
BACKWARD	⊕	⊖

RECLINE MOTOR:

Position \ Terminal	3	4
FORWARD	⊖	⊕
BACKWARD	⊕	⊖

NOTE: When a motor does not run, reverse the battery terminal connection. If the motor still does not run, the motor or the wire harness is defective. For replacing the motor see section 20.

Component Location Index

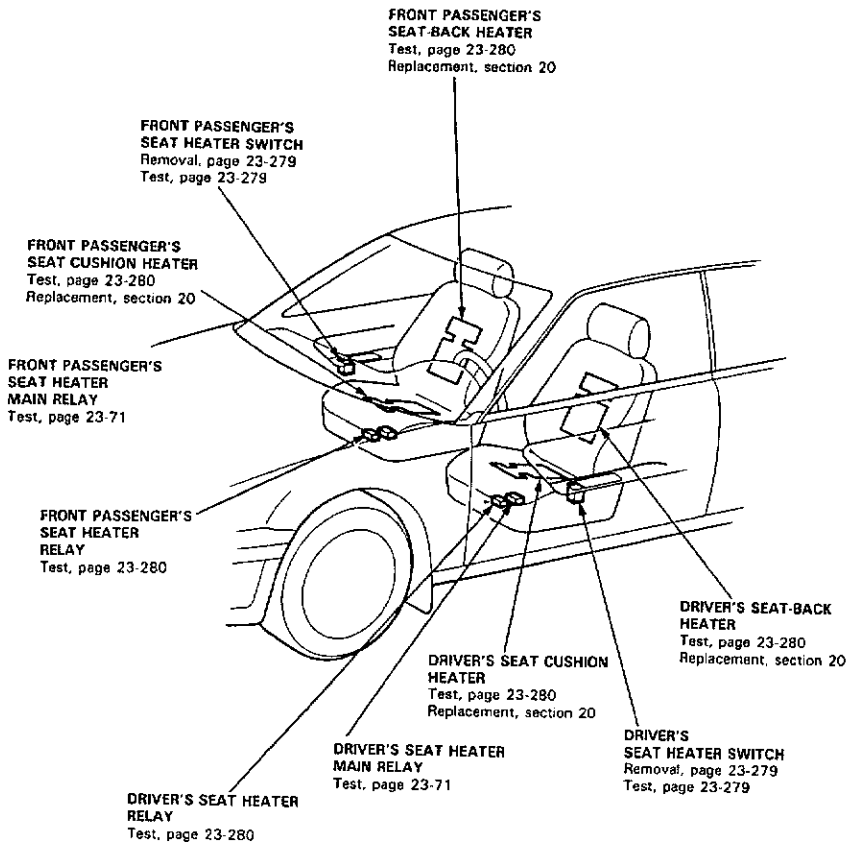

Circuit Diagram

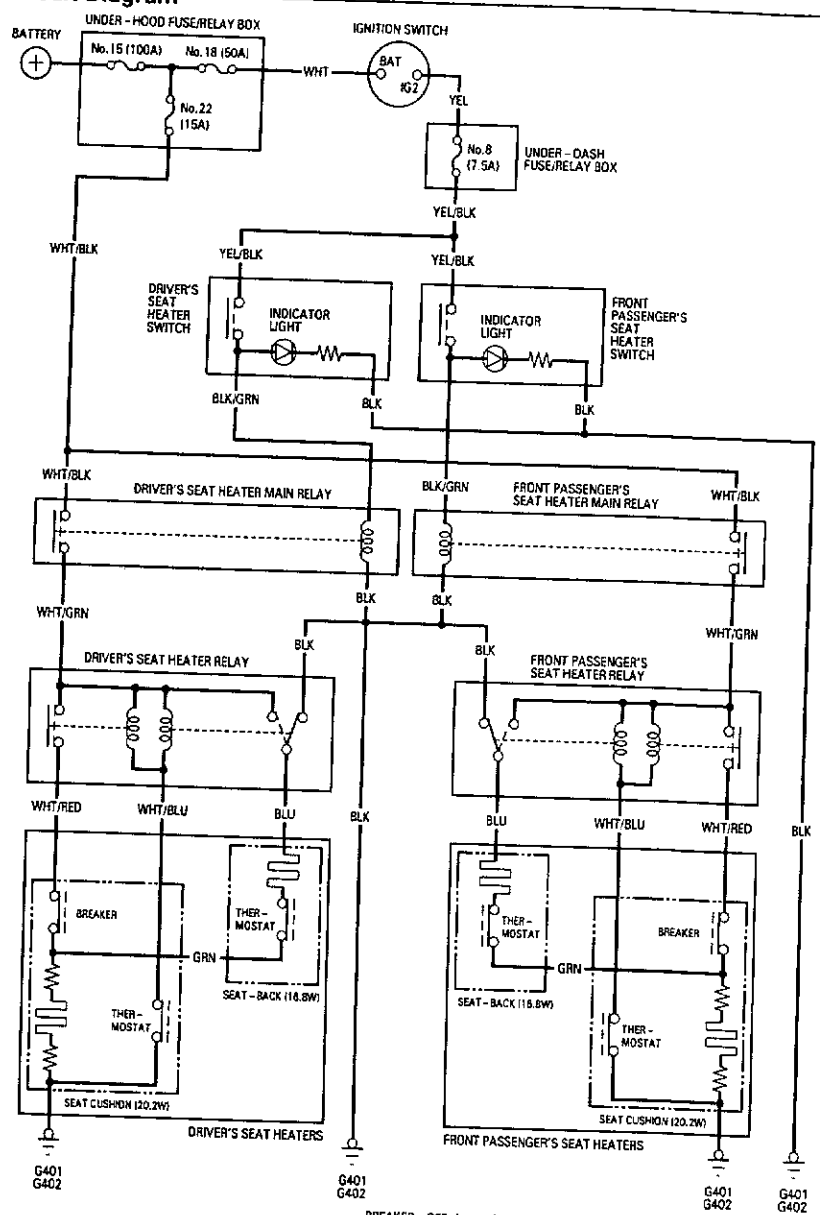

BREAKER : OFF above 122°F (50°C)/ON above 86°F (30°C
THERMOSTAT : OFF above 104°F (40°C)/ON above 68°F (20°C)

Troubleshooting

NOTE: The numbers in the table show the troubleshooting sequence.

Symptom \ Item to be inspected		Blown No. 22 (15 A) fuse (In the under-hood fuse/relay box)	Blown No. 8 (7.5 A) fuse (In the under-hood fuse/relay box)	Blown indicator light bulb	Seat heater switch	Seat heater	Thermostat (In the seat cushion heater)	Seat heater main relay input	Seat heater relay	Poor ground	Open circuit wires, loose or disconnected terminals
Seat heaters work, but indicator light does not go on.				1						G401 G402	
Seat heaters do not work and indicator light does not go on.		1			3			2		G401 G402	WHT/BLK or YEL/BLK
Seat heaters do not work, but indicator light goes on.	Driver's seat						3	1	2	G401 G402	BLK/GRN, WHT/GRN
	Front passenger's seat						3	1	2	G304	WHT/RED, WHT/BLU, BLU
Seat cushion heater or seat-back heater does not work, but indicator light goes on.						1					

Switch Removal

1. Pry out the switch from the armrest.
2. Disconnect the 5-P connector to remove the switch.

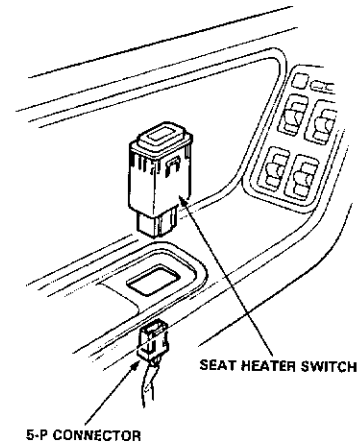

Switch Test

1. Pry out the seat heater switch from the armrest.
2. Check for continuity between the terminals according to the table.

Position \ Terminal	A		B		C
ON	○		○	⊗	○
OFF					

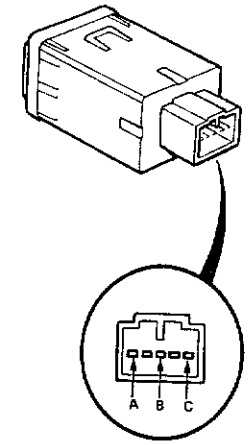

View from terminal side

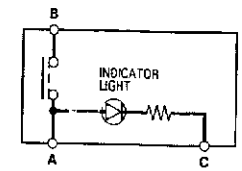

Heater Test

1. Disconnect the 6-P connector and 2-P connector as shown below

NOTE: Driver's seat is shown. Front passenger's seat is similar

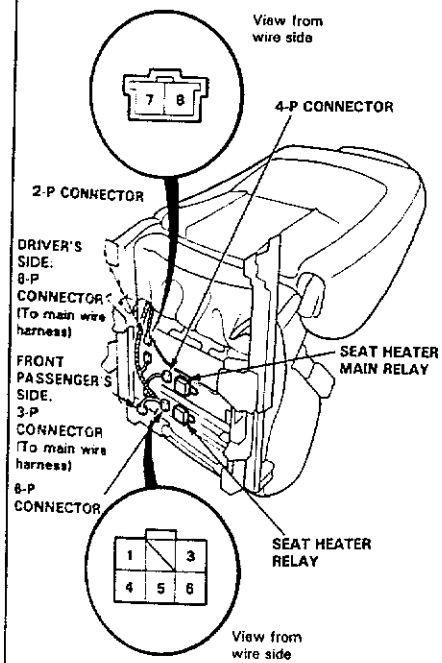

2. Check for continuity between the No.1 and No.5 terminals, between the No.7 and No.8 terminals (R x 10^3 scale).
There should be continuity.

Heater Relay Test

1. Remove the driver's seat, then remove the relay from the bottom of the seat.

2. There should be continuity between the F and A terminals and between the C and D terminals when the battery is connected across the F and E terminals. There should be continuity between the F and D terminals when the battery is disconnected.

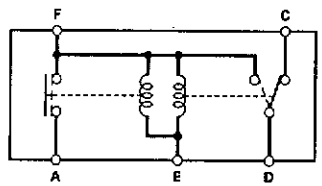

Component Location Index

CAUTION:
- All SRS electrical wiring harnesses are covered with yellow outer insulation.
- Before disconnecting the SRS wire harness, install the short connector (s) on the airbag (s).
- Replace the entire affected SRS harness assembly if it has an open circuit or damaged wiring.

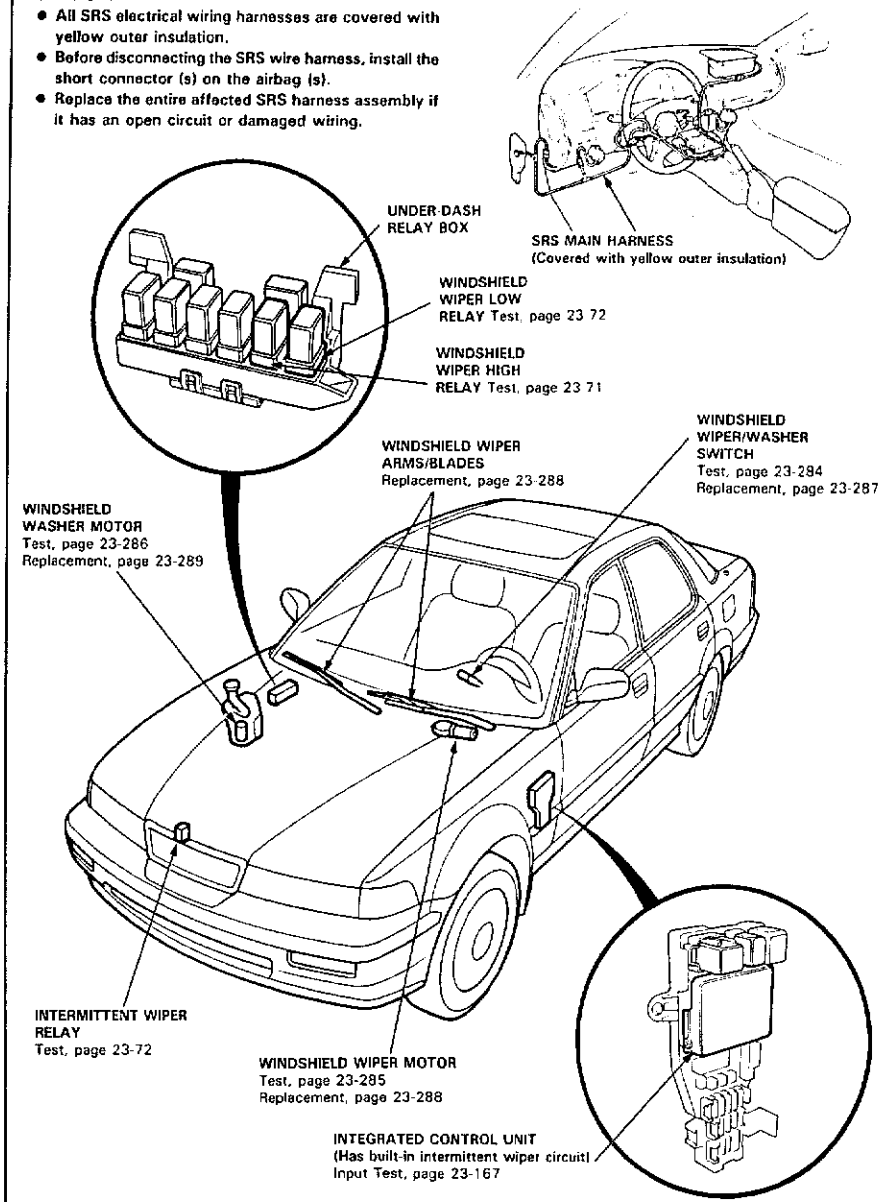

Circuit Diagram

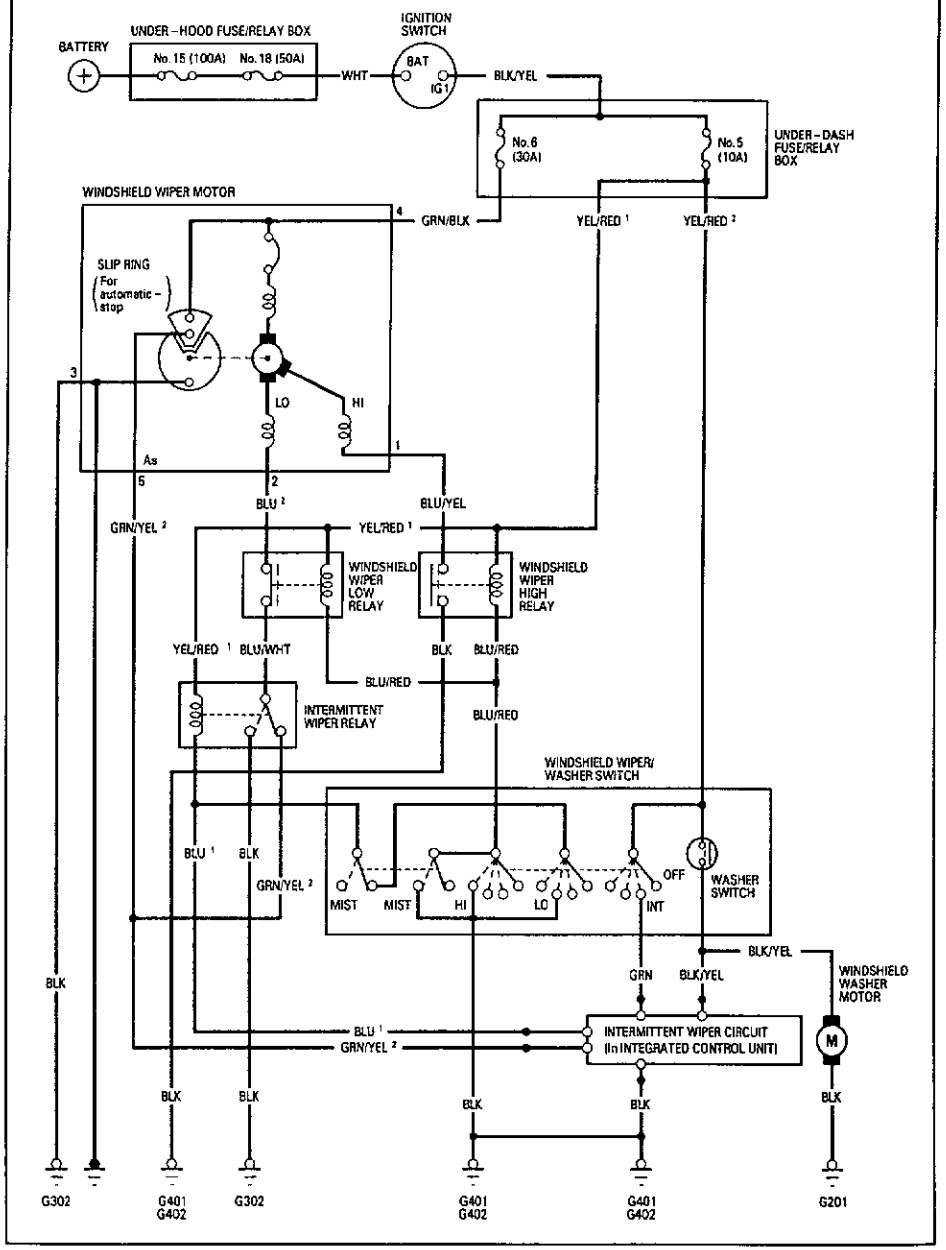

Troubleshooting

NOTE: The numbers in the table show the troubleshooting sequence.

Symptom	Item to be Inspected	Blown No. 6 (30 A) fuse (In the under-hood fuse/relay box)	Blown No. 5 (10 A) fuse (In the under-dash fuse/relay box)	Wiper switch	Mist switch	Wiper motor assembly	Washer switch	Washer motor	Intermittent wiper relay	Wiper low relay	Wiper high relay	Intermittent wiper circuit (In the integrated control unit)	Combined operation with wiper/ waser (In the integrated control unit)	Insufficient washer fluid in reservoir	Disconnected blocked washer hose or clogged outlet	Disconnected wiper linkages	Poor ground	Open circuit wires, loose or disconnected terminals
Wipers do not operate.	In all positions	1		4		2										3	G302	GRN/BLK
	In INT			1		4			2	3		5					G302	YEL/RED[2] GRN GRN/YEL[2]
	In LO			1		4			2	3		5					G302	YEL/RED[1] BLU/RED BLU[1] BLU[2] BLU/WHT
	In HI			1		3					2						G401 G402	BLU/RED YEL/RED[1] BLU/YEL
	In MIST				1						2						G401 G402	BLU/RED YEL/RED[1] BLU[1]
Blades do not return to park position when wipers are turned OFF.				2		1			3	4								GRN/YEL[2]
Erratic intermittent cycle or intermittent function does not work.									1			2						BLU[1]
Little or no washer fluid is pumped.			2				5	4					1	3			G201	BLK/YEL
Wipers do not operate simultaneously with washer.												1						BLU[1]

Windshield Wiper/Washer Switch Test

1. Remove the dashboard lower panel (see section 20).
2. Disconnect the 10-P connector from the floor wire harness.
3. Check for continuity between the terminals in each switch position according to the table.

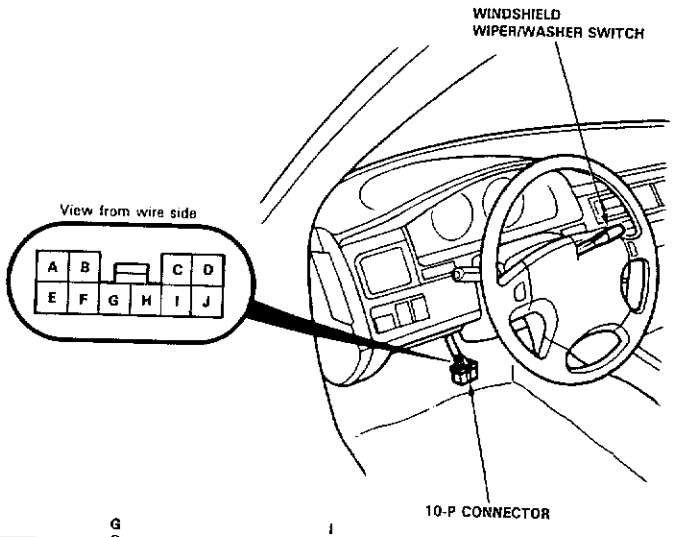

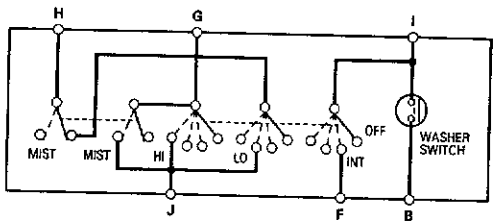

Position \ Terminal	A	B	C	D	E	F	G	H	I	J
INT						○			○	
LO								○		○
HI							○			○
Mist switch "ON"							○			○
Washer switch "ON"		○							○	

Windshield Wiper Motor Test

1. Open the hood and remove the cap nuts and the wiper arms (see page 23-288).
   NOTE: Carefully remove the wiper arms so that they do not touch the hood.
2. Remove the hood seal and air scoop by prying out their trim clips.
3. Disconnect the 5-P connector from the windshield wiper motor.
4. Test the motor:

   LOW SPEED: Connect battery power to the No.4 terminal and ground to the No.2 terminal.
   HIGH SPEED: Connect battery power to the No.4 terminal and ground to the No.1 terminal.

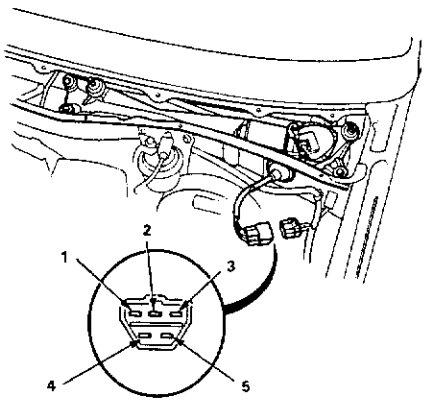

View from terminal side.

5. If the motor fails to run smoothly, replace it.
6. Connect an analog voltmeter between the No.5 and the No.3 terminals. Run the motor at low or high speed.

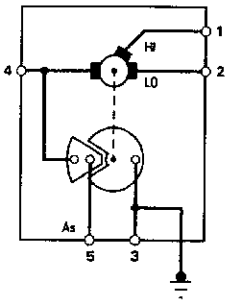

NOTE: As (Automatic stop)

The voltmeter should indicate 0V to more than 4V alternately.

NOTE:
- Use an analog tester.
- Use on the car battery

Windshield Washer Motor Test

1. Remove the inner fender.
2. Disconnect the 2-P connector from the washer motor.
3. Test the washer motor operation by connecting battery power to the ⊕ terminal and ground to the ⊖ terminal.
   - If the motor fails to run smoothly, replace it.
   - If the motor runs smoothly, but little or no washer fluid is pumped, check for a disconnected or blocked washer hose, or a clogged pump outlet in the motor.

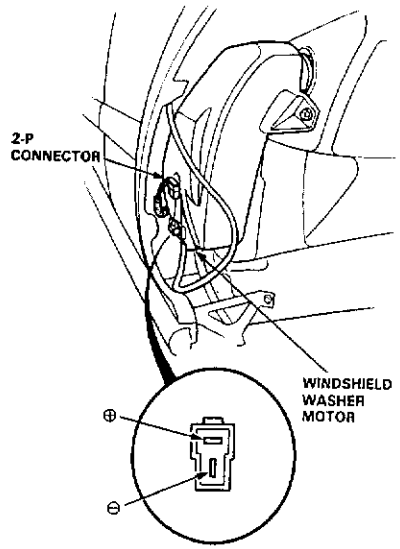

Windshield Wiper/Washer Switch Replacement

CAUTION:
- **All SRS electrical wiring harnesses are covered with yellow outer insulation.**
- **Before disconnecting the SRS wire harness, install the short connector (s) on the airbag (s).**
- **Replace the entire affected SRS harness assembly if it has an open circuit or damaged wiring.**

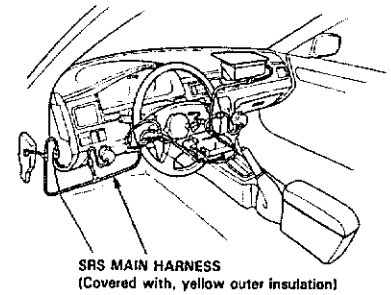

1. Remove the dashboard lower cover and knee bolster.

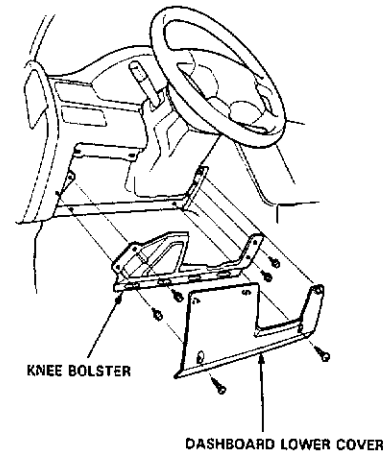

2. Remove the steering column covers.

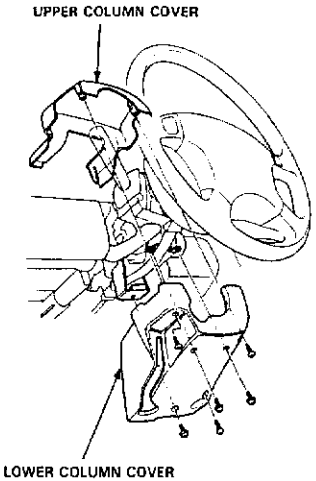

3. Disconnect the 10-P connector, then remove the windshield wiper/washer switch.

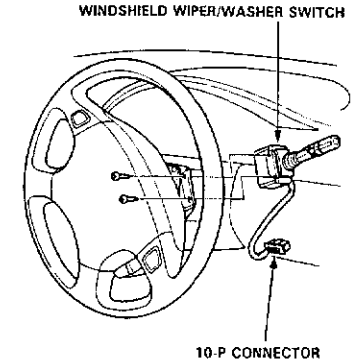

Windshield Wiper Motor Replacement

1. Open the hood and remove the cap nuts and the wiper arms.

   NOTE: Carefully remove the wiper arms so that they do not touch the hood.

2. Remove the windshield lower molding, hood seal and air scoop by prying off the trim clips and removing the screws.

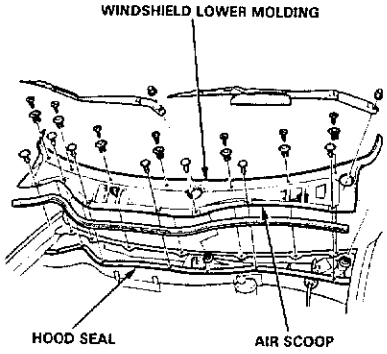

3. Disconnect the 5-P connector from the wiper motor, then remove the wiper harness from the wiper linkage.

4. Remove the wiper linkage assembly by removing the three mounting bolts.

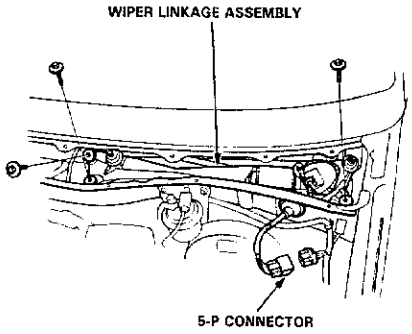

5. Remove the three mounting bolts and nut from the wiper linkage to remove the windshield wiper motor.

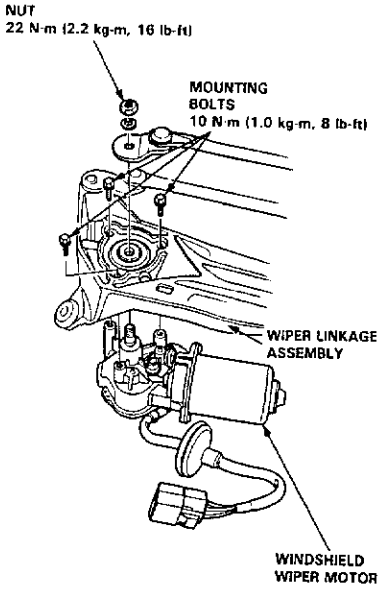

6. Install the windshield wiper motor in the reverse order of removal.

Washer Replacement

1. Remove the washer filler assembly.
2. Remove the inner fender.
3. Disconnect the hose and the 2-P connectors from the washer motor.
4. Remove the washer reservoir by removing the two mounting bolts.
5. Remove the washer motor and washer level sensor from the washer reservoir.
6. Remove the washer nozzles and washer hose.

   NOTE:
   - Take care not to pinch the hoses during reinstallation.
   - Install the grommets firmly.
   - After installation, adjust the aim of the washer nozzles.

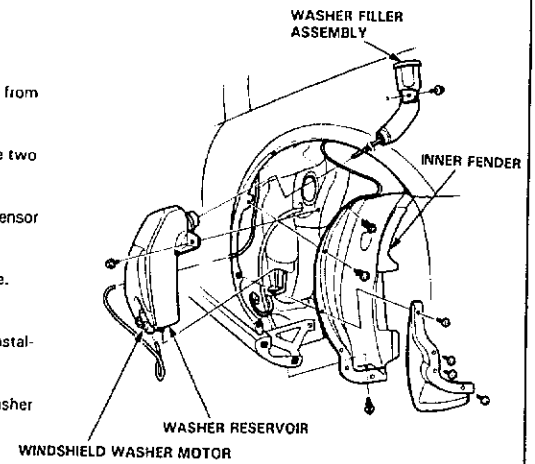

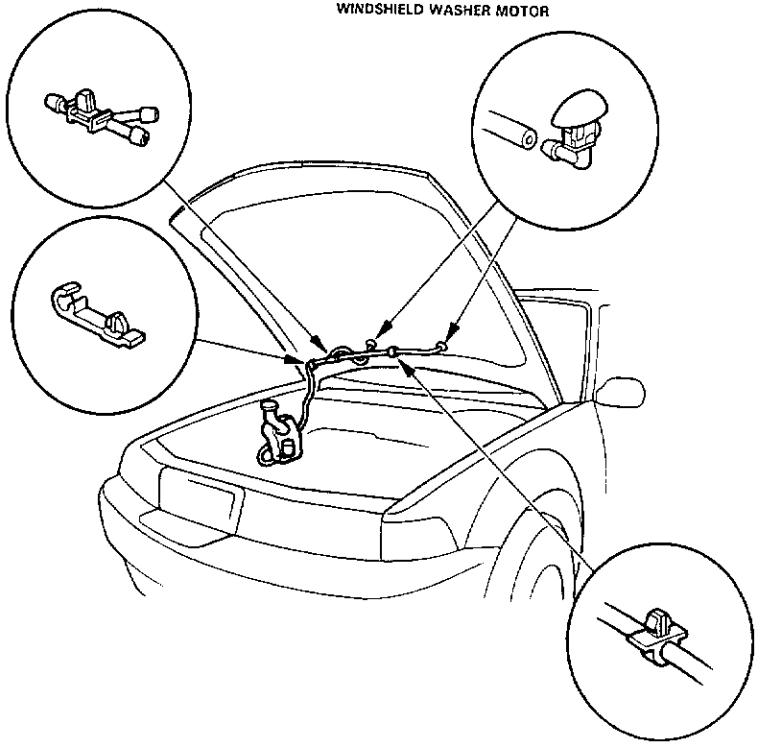

Component Location Index

CAUTION:
- All SRS electrical wiring harnesses are covered with yellow outer insulation.
- Before disconnecting the SRS wire harness, install the short connector (s) on the airbag (s).
- Replace the entire affected SRS harness assembly if it has an open circuit or damaged wiring.

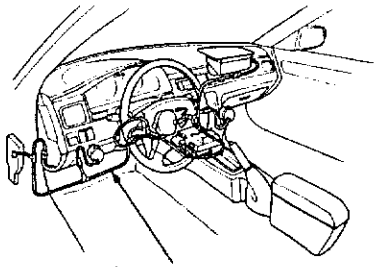

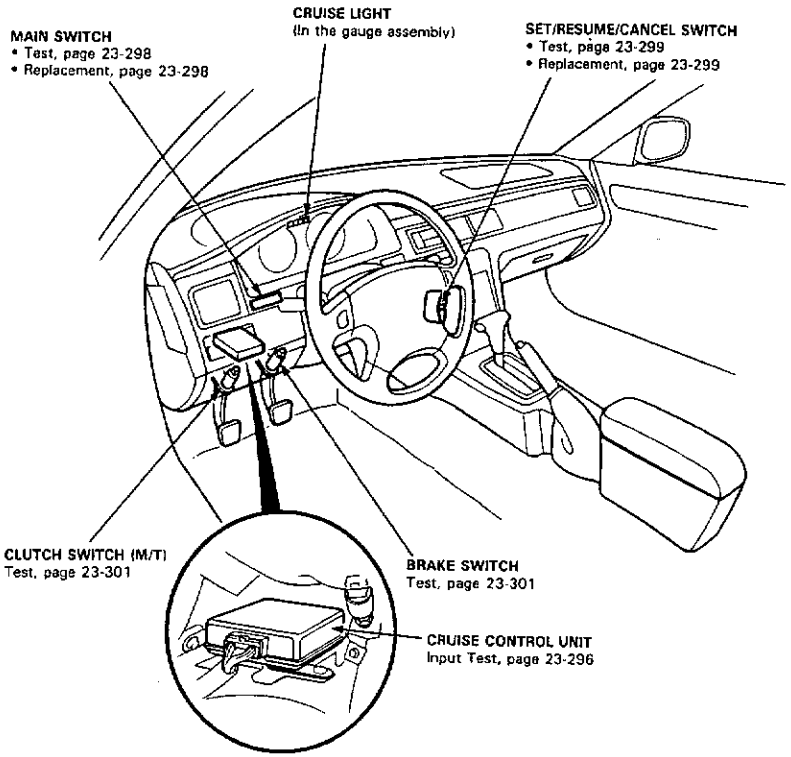

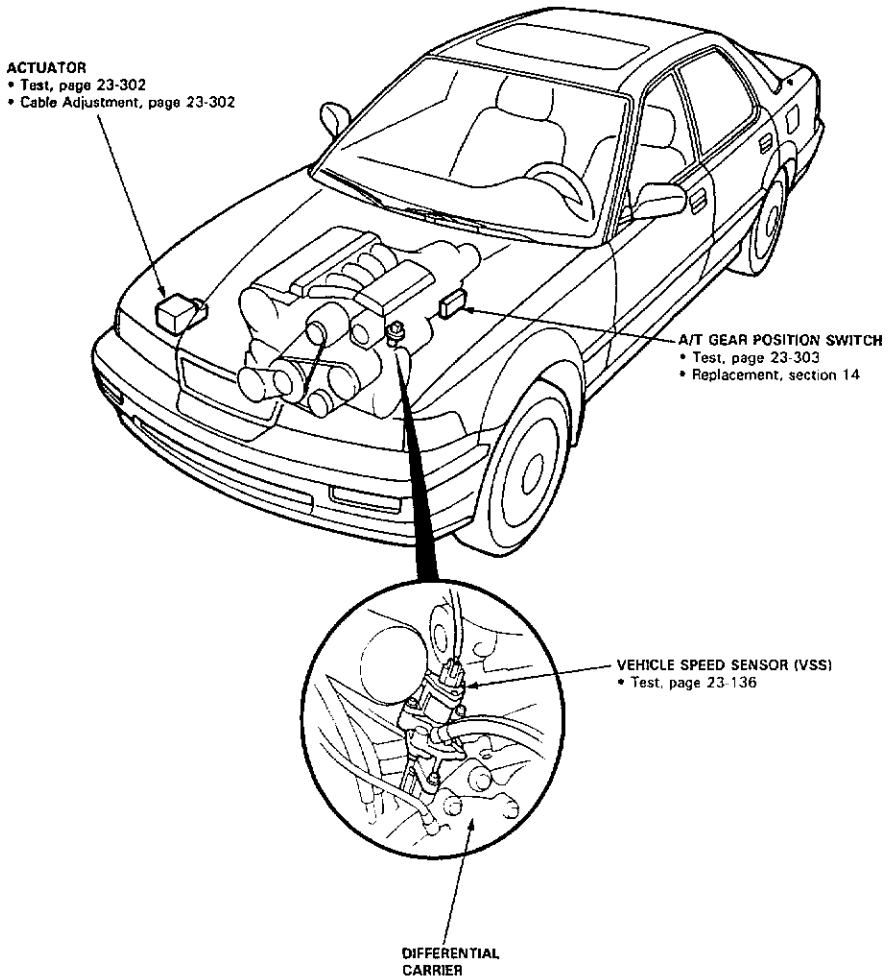

Description

The cruise control system uses mechanically and electrically operated devices to maintain vehicle speed at a setting selected by the driver.

The cruise control unit receives command signals from the cruise control main switch and the cruise control set/resume/cancel switch. It receives information about operating conditions from the brake switch, ECM, vehicle speed sensor (VSS), clutch switch (with manual transmission), or the A/T gear position switch (with automatic transmission). The cruise control unit sends operational signals to the devices that regulate the throttle position. The throttle position maintains the selected vehicle speed. Essentially, the control unit compares the actual speed of the vehicle to the selected speed. Then, the control unit uses the result of that comparison to open or close the throttle.

The brake switch releases the system's control of the throttle at the instant the driver depresses the brake pedal. The switch sends an electronic signal to the control unit when the brake pedal is depressed; the control unit responds by allowing the throttle to close. The clutch switch (manual transmission) or the A/T gear position switch (automatic transmission) sends a disengage signal input to the control unit that also allows the throttle to close.

Operation:
The cruise control system will set and automatically maintain any speed above 25 mph (40 km/h). To set, make sure that the main switch is in the "ON" position. After reaching the desired speed, press the set switch. The cruise control unit will receive a set signal input and, in turn, will actuate the cruise control actuator. When the set switch is depressed and the cruise control system is on, the "cruise light", an indicator in the gauge assembly, will light up. You can cancel the cruise control system by depressing the cancel switch or by pushing the main switch to "OFF". This removes power to the control unit and erases the set speed from memory. If the system is disengaged temporarily by the brake switch, clutch switch, or the A/T gear position switch and vehicle speed is still above 25 mph (40 km/h), press the resume switch. With the resume switch depressed and the set memory retained, the vehicle automatically returns to the previous set speed.
For gradual acceleration without depressing the accelerator pedal, push the resume switch down and hold it there until the desired speed is reached. This will send an acceleration signal input to the control unit. When the switch is released, the system will be reprogrammed for the new speed. To slow the vehicle down, depress the set switch. This will send a deceleration signal input to the control unit, causing the vehicle to coast until the desired speed is reached. When the desired speed is reached, release the set switch. This will reprogram the system for the new speed.

The electrically operated actuator controls the throttle position in the same way as a vacuum operated actuator. The magnetic clutch is part of the safety system and controls acceleration deceleration.

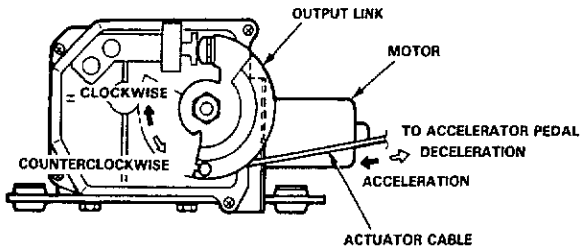

Acceleration
Due to the rotation of the motor output shaft, power is transmitted to the magnetic clutch by the transmission gear and the worm wheel. The magnetic clutch is rotated and magnetized. It attracts the clutch plate and power is transmitted to the output link by the gear directly connected to the clutch plate and the output gear. The output link rotates clockwise, then the actuator cable opens the throttle, and the car accelerates.

Deceleration
The motor output shaft rotates in reverse direction of acceleration, then, in the same way, the power is transmitted to the output link. The output link rotates counterclockwise, then the actuator cable closes the throttle, and the car decelerates.

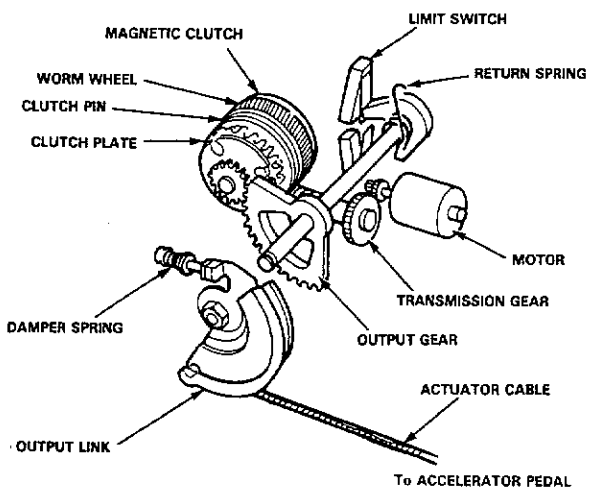

Circuit Diagram

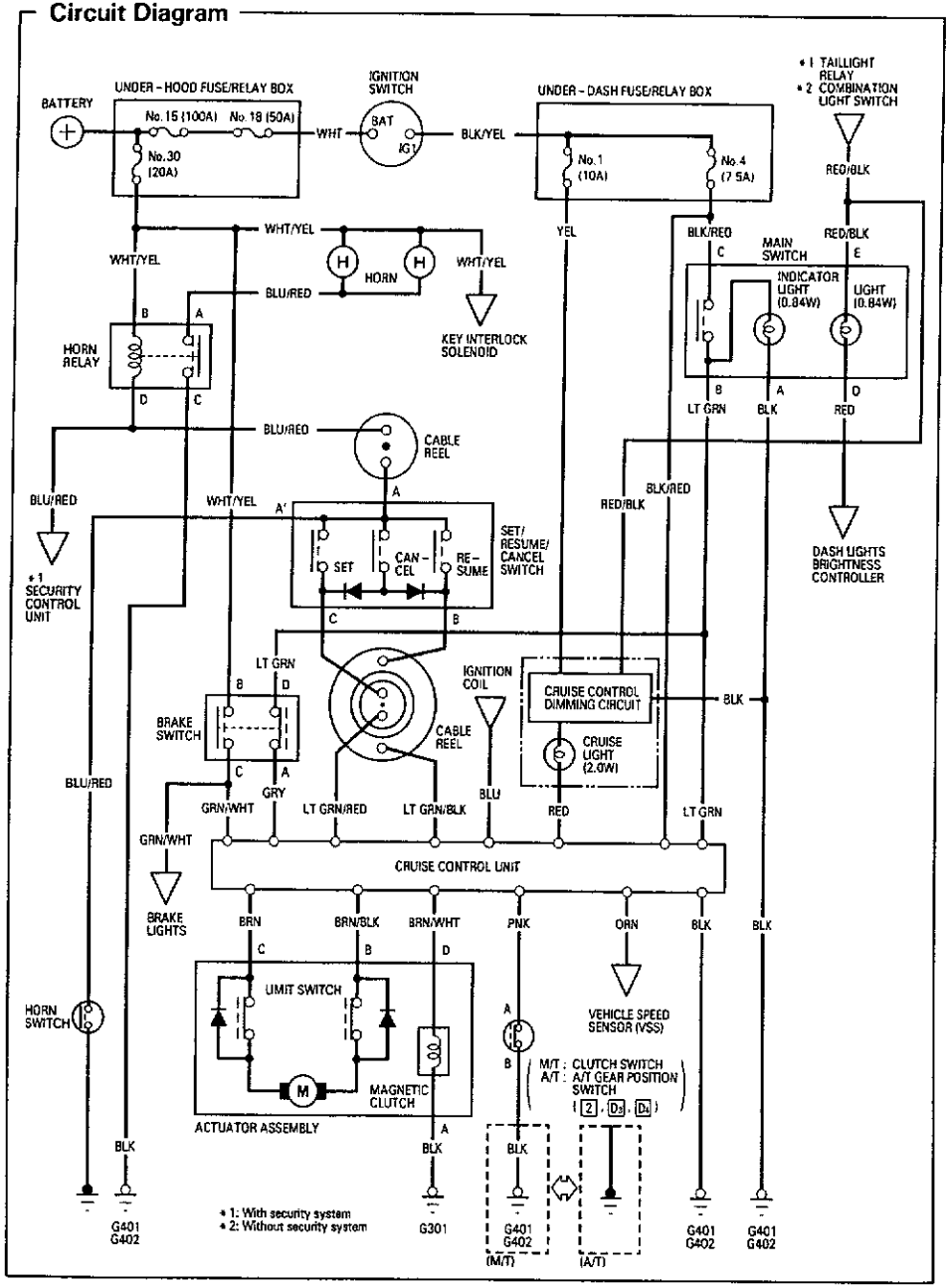

Troubleshooting

NOTE:
- The numbers in the table show the troubleshooting sequence.
- Before troubleshooting
  - Check the No.1 (10A) and the No.4 (7.5A) fuses in the under-dash fuse/relay box, and the No.15 (100A), No.18 (50A), and the No.30 (20A) fuses in the under-hood fuse/relay box.
  - Check that the horn sound.
  - Check the tachometer to see if it works properly.

Symptom \ Item to be inspected.	Main switch	SET/RESUME/CANCEL switch	Brake switch and mounting	Clutch switch and mounting (M/T)	A/T gear position switch (A/T)	Vehicle speed sensor (VSS)	Dimming circuit in gauges	Actuator and cable deflection	Control unit	Poor ground	Open circuit in wires, loose or disconnected terminals
Cruise control can not be set.	2	3	4	5					1	G401 G402	BLU/RED, LT GRN/RED, BLU, BLK/RED, LT GRN, GRY, ORN, BRN, BRN/BLK, BRN/WHT or PNK
Cruise control can be set, but indicator light does not go on.							2		1	G401, G402	YEL or RED
Cruise speed noticeably higher or lower than what was set.						1		2	3		
Excessive overshooting and/or undershooting when trying to set speed.						2		1	3		
Steady speed not held even on a flat road with cruise control set.						1		2	3		
Car does not decelerate or accelerate accordingly when SET or RESUME button is pushed.		1							2		LT GRN/BLK LT GRN/RED
Set speed not cancelled when clutch pedal is pushed (M/T).				1					2		
Set speed not cancelled when shift lever is moved to N (A/T).					1				2		
Set speed not cancelled when brake pedal is pushed.			1						2		
Set speed not cancelled when main switch is pushed OFF.	1								2		
Set speed not resumed when RESUME button is pushed (with main switch on, but set speed temporarily cancelled).		1							2		LT GRN/BLK LT GRN/RED

Control Unit Input Test

CAUTION:
- **All SRS electrical wiring harnesses are covered with yellow outer insulation.**
- **Before disconnecting the SRS wire harness, install the short connector (s) on the airbag (s).**
- **Replace the entire affected SRS harness assembly if it has an open circuit or damaged wiring.**

Disconnectthe 14-P connector from the control unit. Make the following tests at connector terminals.

Inspect the connector terminals to be sure they are all making good contact.

- If the terminals are bent, loose, or corroded, repair them as necessary, and recheck the system.
- If the terminals look OK, make the following input tests at the connector terminals.
  - If any test indicates a problem, find and correct the cause, then recheck the system.
  - If all the input tests prove OK, the control unit must be faulty; replace it.

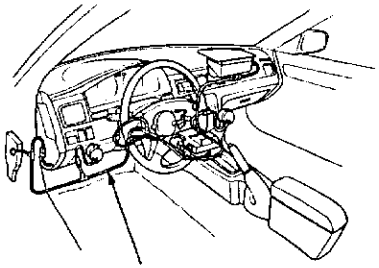

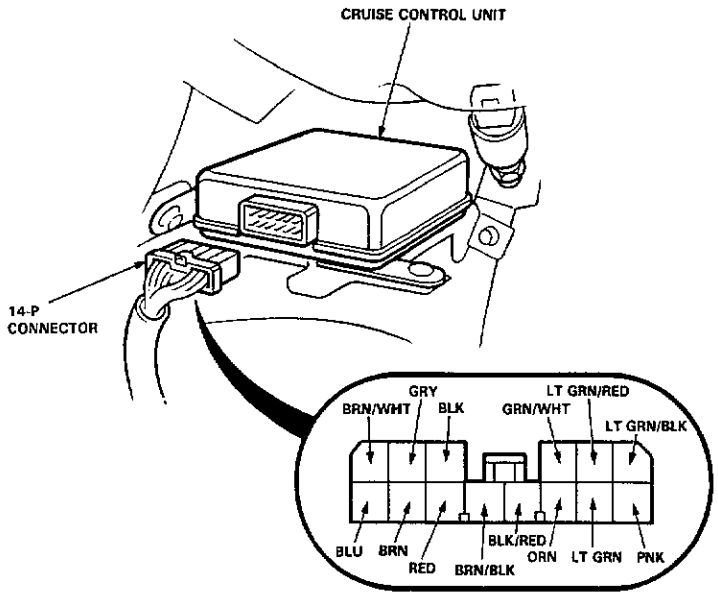

View from wire side

No.	Wire	Test condition	Test: Desired result	Possible cause if result is not obtained
1	BLK	Under all conditions.	Check for continuity to gound: There should be continuity.	• Poor Ground (G401, G402) • An open in the wire.
2	LT GRN	Ignition switch ON and main switch ON.	Check for voltage to ground: There should be battery voltage.	• Blown No. 4 (7.5 A) fuse (in the under-dash fuse/relay box). • Faulty main switch • An open in the wire.
3	LT GRN/BLK	RESUME button pushed.	Check for voltage to ground: There should be battery voltage.	• Blown No. 30 (20 A) fuse (in the under-hood fuse/relay box). • Faulty SET/RESUME/CANCEL switch. • Faulty horn relay. • Faulty cable reel. • An open in the wire.
4	LT GRN/RED	SET button pushed.		
5	PNK	M/T: Clutch pedal released A/T: Shift lever in 2, D3, or D4.	Check for continuity to ground: There should be continuity. NOTE: There should be no continuity when the clutch pedal is released or when the A/T shift lever is in other positions.	• Faulty or misadjusted clutch switch (M/T). • Faulty A/T gear position switch. • Poor ground (G401, G402). • An open in the wire.
6	BLU	Start the engine.	Check for voltage to ground: There should be battery voltage.	• Faulty ignition system or ECM. • An open in the wire.
7	ORN	Ignition switch ON and main switch ON. Raise the front of the car, rotate one wheel slowly.	Check for voltage between the ORN ⊕ and BLK ⊖ terminals: should be 0–5–0–5 V repeatedly.	• Faulty vehicle speed sensor (VSS) • An open in the wire. • Poor ground (G101).
8	GRY	Ignition switch ON, main switch ON and brake pedal pushed, then released.	Check for voltage to ground: There should 0 V with the pedal pushed and battery voltage with the pedal released.	• Faulty brake switch. • An open in the wire.
9	GRN/WHT	Brake pedal pushed, then released.	Check for voltage to ground: There should be battery voltage with the pedal pushed, and 0 V with the pedal released.	• Faulty brake switch. • An open in the wire.
10	RED	Ignition switch ON.	Connect to ground: Cruise indicator in the gauge assembly comes on.	• Blown bulb. • Blown No. 1 (10 A) fuse (in the under-dash fuse/relay box). • Faulty dimming circuit in the gauge assembly. • An open in the wire.
11	BRN	Connect the battery power to the BRN/WHT terminal and ground to the BRN/BLK terminal.	Check the operation of the actuator motor: You should be able to hear the motor.	• Faulty actuator. • An open in the wire.
12	BRN/BLK			
13	BRN/WHT	Connect the battery power to the BRN terminal.	Check the operation of the magnetic clutch: Clutch should click and output link should be locked.	• Faulty actuator. • Poor ground (G301). • An open in the wire.
14	BLK/RED	Ignition switch ON.	Check for voltage to ground: There should be battery voltage.	• Blown No. 4 (7.5 A) fuse (in the under-dash fuse/relay box). • An open in the wire.

Main Switch Test

CAUTION:
- All SRS electrical wiring harnesses are covered with yellow outer insulation.
- Before disconnecting the SRS wire harness, install the short connector (s) on the airbag (s).
- Replace the entire affected SRS harness assembly if it has an open circuit or damaged wiring.

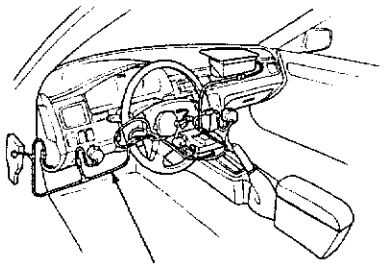

NOTE: Be careful not to damage the main switch and the instrument panel.

1. Carefully pry out the main switch from the instrument panel and disconnect the connector.

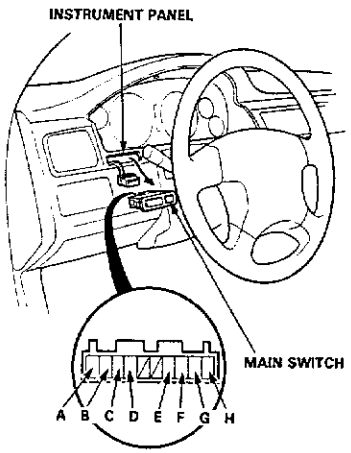

2. Check for continuity between the terminal in each switch position according to the table.

Terminal / Position	C	B		A	E		D
OFF		○	⊖	○	○	⊖	○
ON	○	○	⊖	○	○	⊖	○

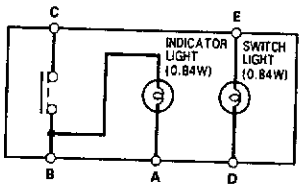

- If there is no continuity, replace the switch.

Set/Resume/Cancel Switch Test

CAUTION:
- All SRS electrical wiring harnesses are covered with yellow outer insulation.
- Before disconnecting the SRS wire harness, install the short connector (s) on the airbag (s).
- Replace the entire affected SRS harness assembly if it has an open circuit or damaged wiring.

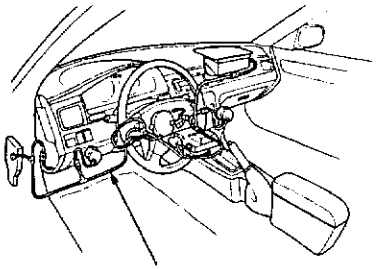

NOTE: The radio may have a coded theft protection circuit. Be sure to get the customer's code number before
- Disconnecting the battery.
- Removing the No. 39 (10 A) fuse in the underhood fuse/relay box.
- Removing the radio.

After service, reconnect power to the radio and turn it on. When the word "CODE" is displayed, enter the customer's 5-digit code to restore radio operation.

1. Disconnect the battery negative cable, and then positive cable.

2. Remove the access panel from the steering wheel, then remove the short connector (RED) from the panel.

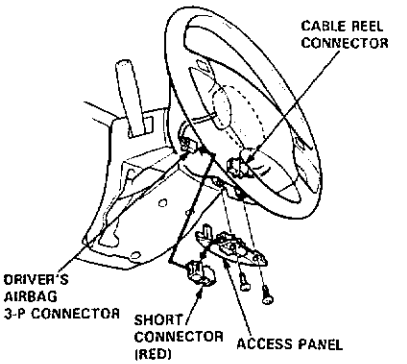

3. Disconnect the connector between the airbag and cable reel, then install the short connector (RED) on the airbag(s).

4. Remove the dashboard lower cover.

5. Disconnect the cable reel 6-P connector from the SRS main harness, then connect Test Harness C only to the cable reel.

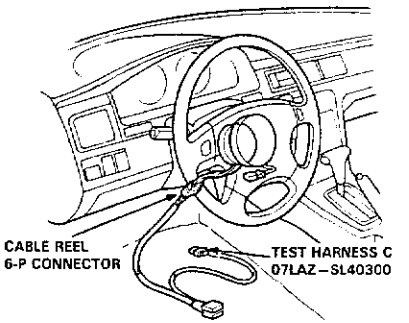

(cont'd)

Set/Resume/Cancel Switch Test (cont'd)

6. Check for continuity between the terminals of Test Harness C in each switch position according to the table.

Terminal / Position	3		2	1
SET (ON)	○		○	
RESUME (ON)	○			○
CANCEL (ON)	○	▶	○	
		▶		○

TEST HARNESS C
07LAZ – SL40300

1	2	3	4
5	6	7	8

- If there is continuity, and it matches the table, the switch is OK.
- If there is no continuity in one or both positions, go to step 7.

7. Remove the cover carefully by prying between the cover and the switch in the sequence shown:

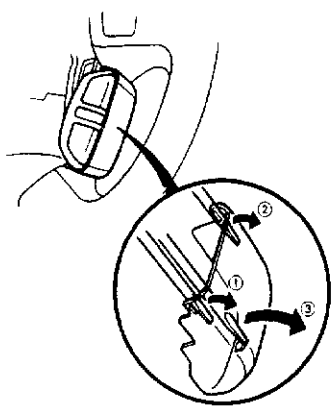

8. Remove the two screws and remove the switch.

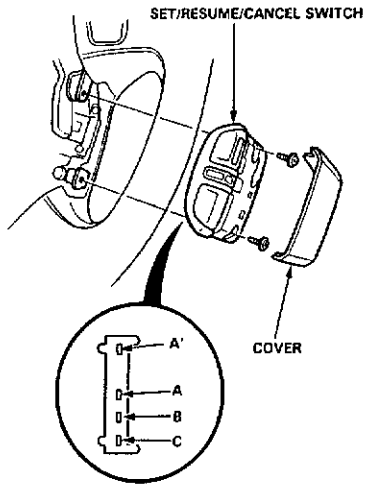

9. Check for continuity between the terminals in each switch position according to the table.

Terminal / Position	A or A'		B	C
SET (ON)	○			○
RESUME (ON)	○		○	
CANCEL (ON)	○	▶		○
		▶	○	

- If there is no continuity in one or both positions, replace the switch.
- If there is continuity and it matches the table, replace the cable reel.

Brake Switch Test

1. Disconnect the 4-P connector from the brake switch.
2. Check for continuity between the terminals according to the table.

Terminal / Brake pedal	A	B	C	D
RELEASED	○			○
PUSHED		○	○	

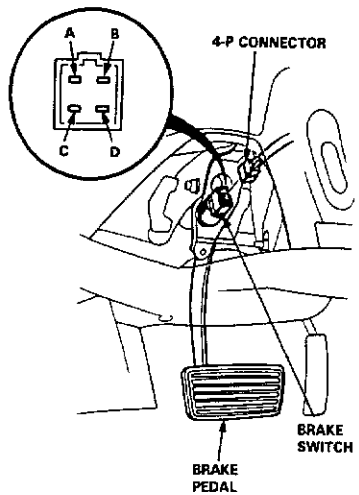

3. If necessary, replace the switch or adjust pedal height (see section 12).

Clutch Switch Test (M/T)

1. Disconnect the 2-P connector from the switch.
2. Check for continuity between the terminals according to the table.

Terminal / Clutch pedal	A	B
RELEASED	○	○
PUSHED		

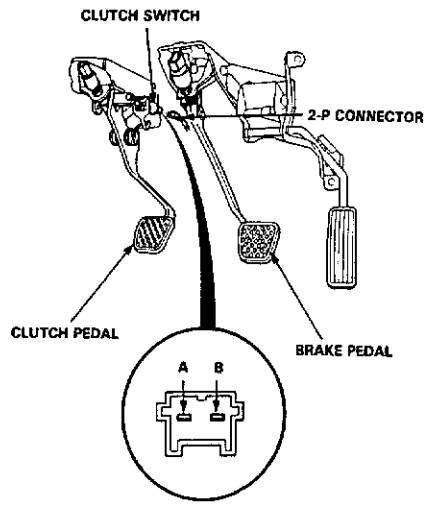

3. If necessary, replace the switch or adjust pedal height (see section 12).

Actuator Assembly Test

1. Disconnect the 4-P connector from the actuator.
2. Check the output linkage for smooth movement.
3. Connect battery power to the D terminal and ground to the A terminal.
4. Check for a clicking sound from the magnetic clutch. The output linkage should be locked.
5. If the output linkage is not locked, replace the actuator assembly.

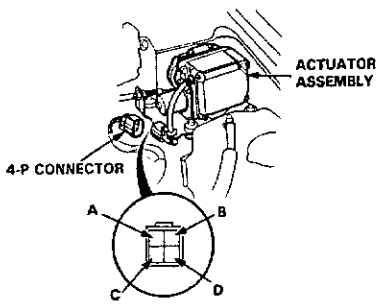

View from terminal side

6. Check the operation of the actuator motor in each output linkage position according to the table. You should be able to hear the motor.

Battery polarities		Output linkage position		
⊕	⊖	FULL CLOSE	MIDDLE POSITION	FULL OPEN
C Terminal	B Terminal	The motor runs	The motor runs	The motor stops
B Terminal	C Terminal	The motor stops	The motor runs	The motor runs

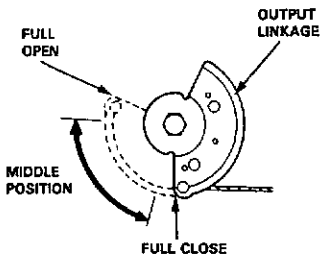

Actuator Cable Adjustment

1. Check that the actuator cable operates smoothly with no binding or sticking
2. Start the engine and warm it up to normal operating temperature (the radiator fan comes on twice).
3. Measure how far the output linkage moves from the fully closed position before. Free play should be 11 ± 1.5 mm (0.43 ± 0.06 in).

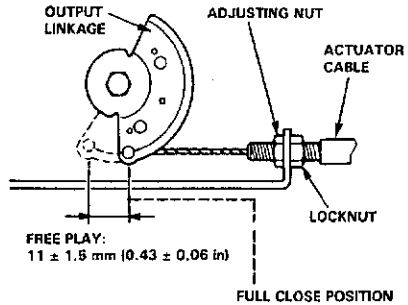

4. If the free play is not within specs, loosen the locknut and turn the adjusting nut as required.

   NOTE: If necessary, check the throttle control system (see section 11), then recheck the output linkage free play.

5. Retighten the locknut and recheck the free play.

A/T Gear Position Switch Test

1. Disconnect the 14-P connector from the A/T gear position switch.
2. Check for continuity between the terminals in each position according to the table and confirm that there is continuity only in position [2], [D3], and [D4].

Position \ Terminal	Body Ground	11
[1]		
[2]	○	○
[D3]	○	○
[D4]	○	○
[N]		
[R]		
[P]		

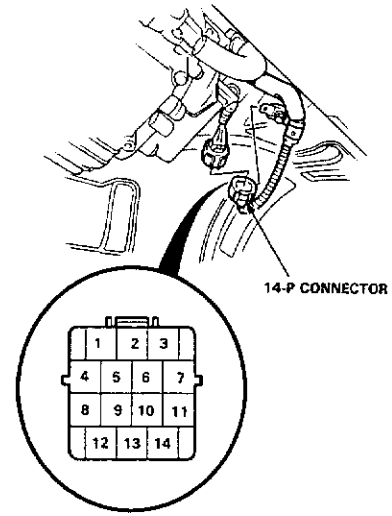

View from terminal side

3. If necessary, replace the A/T gear position switch.

Wiring Locations

CAUTION:
- All SRS electrical wiring harnesses are covered with yellow outer insulation.
- Before disconnecting the SRS wire harness, install the short connector (s) on the airbag (s).
- Replace the entire affected SRS harness assembly if it has an open circuit or damaged wiring.

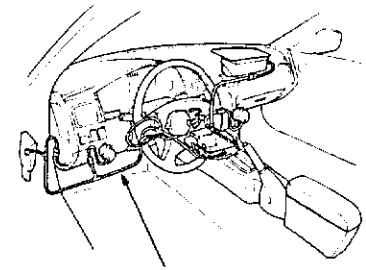

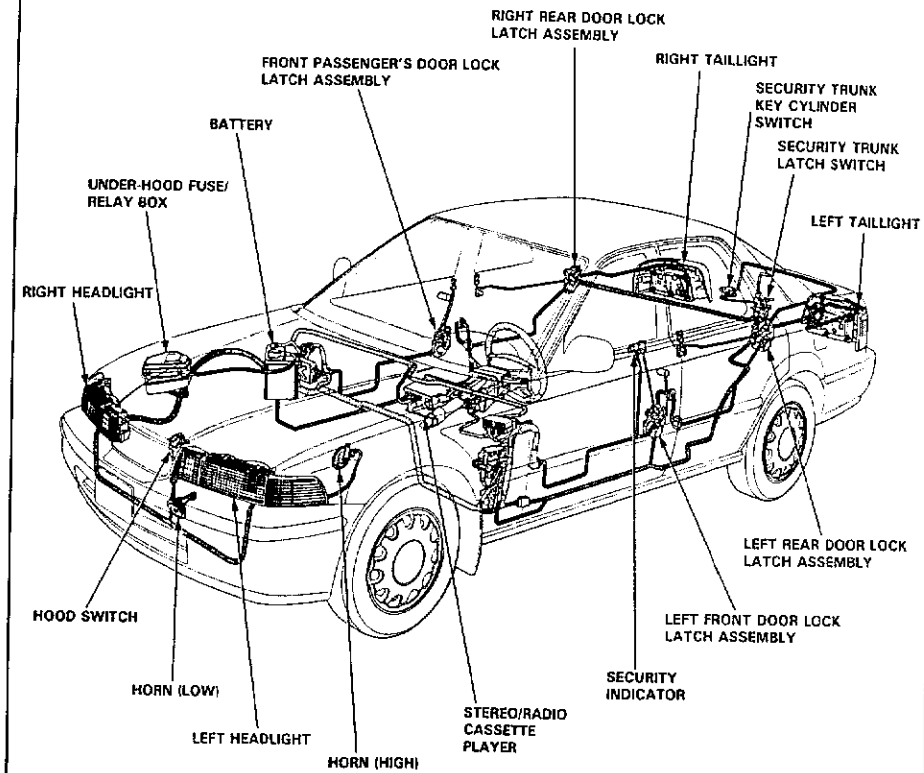

Security Alarm System

Component Location Index

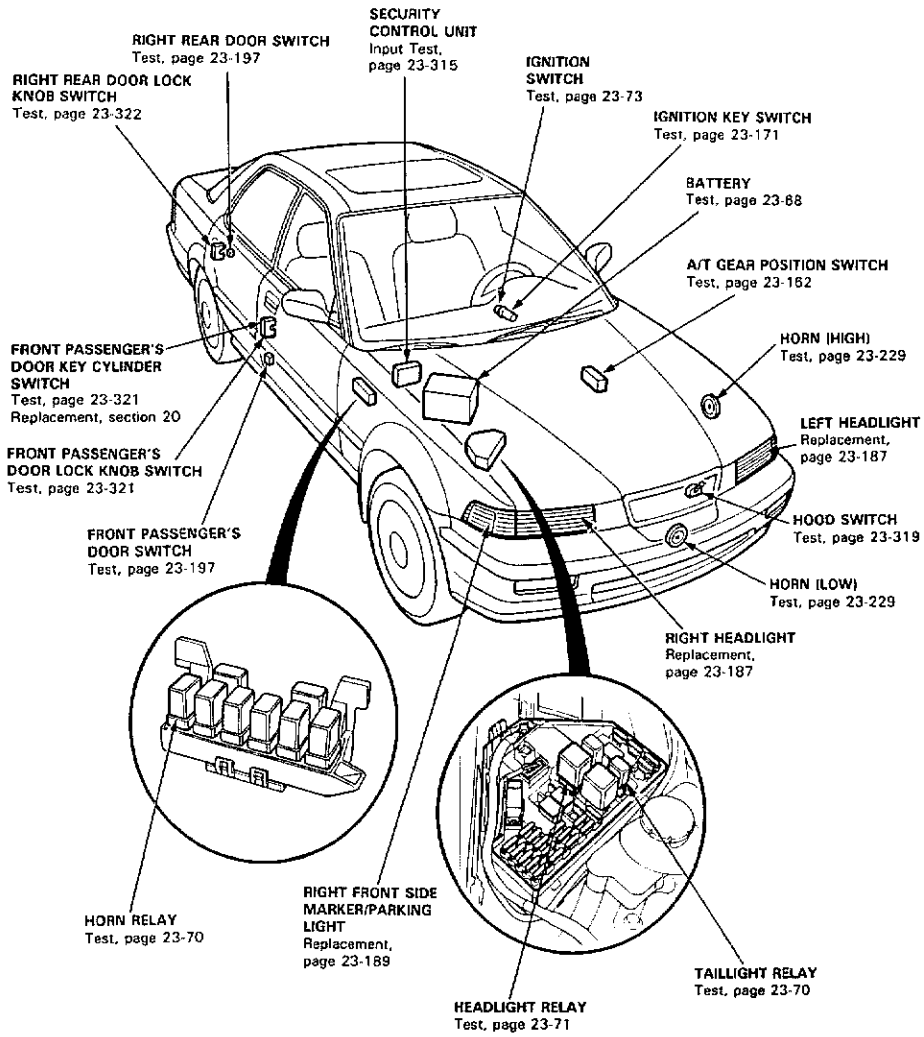

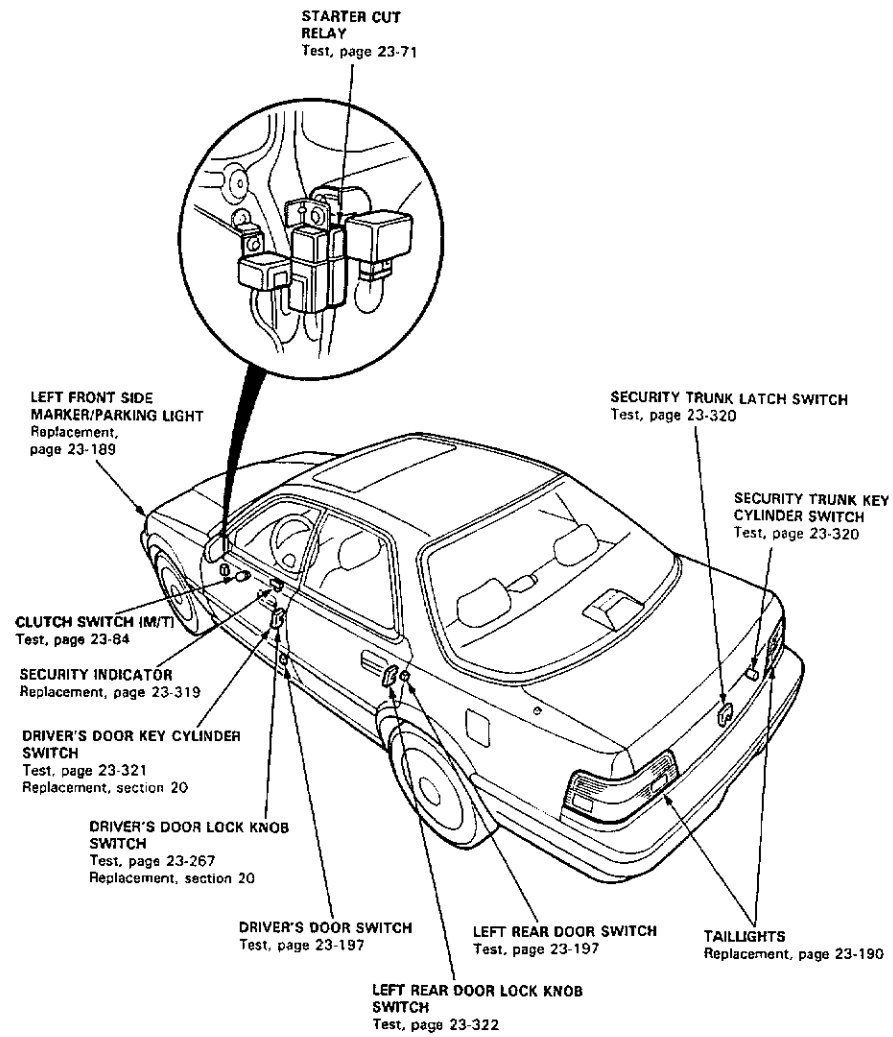

ecurity Alarm System

Description

This system is activated automatically 15 seconds after everything has been closed and locked. The security alarm system indicator light located on the driver's side door panel will flash after the doors are properly locked.
If any of the following conditions occur, the horns will sound, the headlights will flash, and the side marker lights, parking lights and taillights will flash for about two minutes, or until the system is disarmed by unlocking either door from the outside with the key.

① Door is opened forcibly.
② Trunk lid is opened without using the key.
③ Hood is opened.
④ Battery terminals are removed and reconnected
⑤ Engine starter circuit and battery circuit are bypassed by breaking the ignition switch.
⑥ Hood/trunk lid opener in the vehicle is operated.

Flowchart of the security alarm system operation:

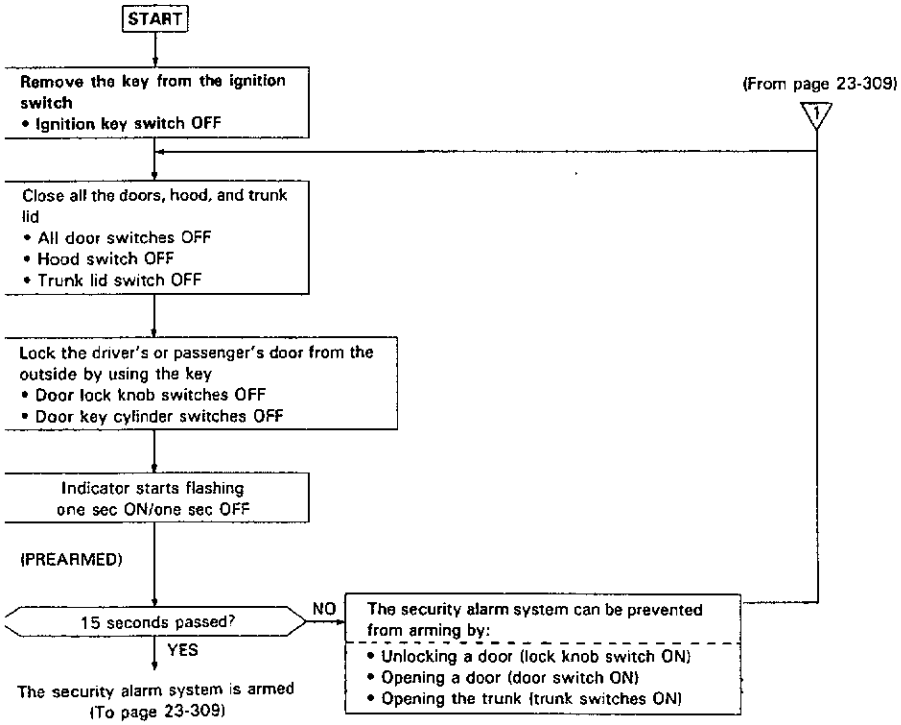

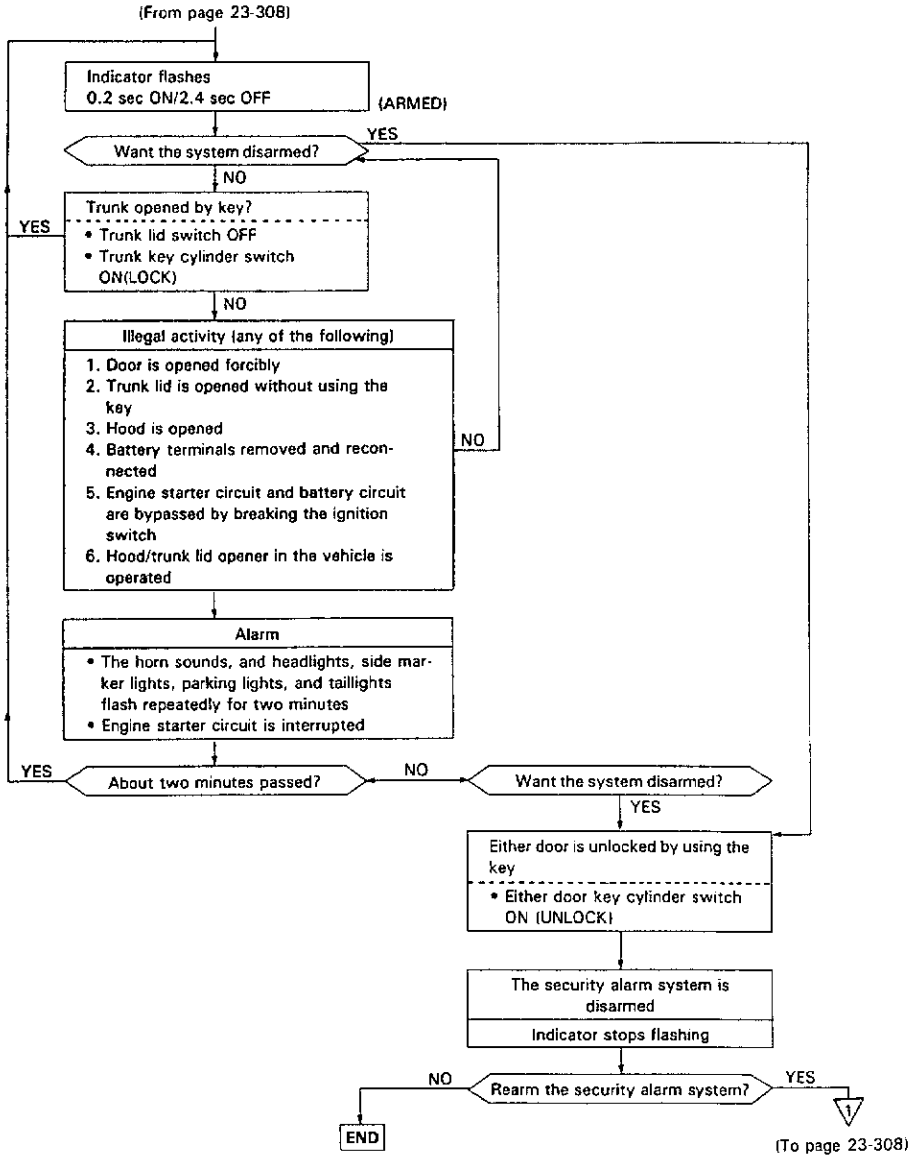

ecurity Alarm System

Circuit Diagram (USA)

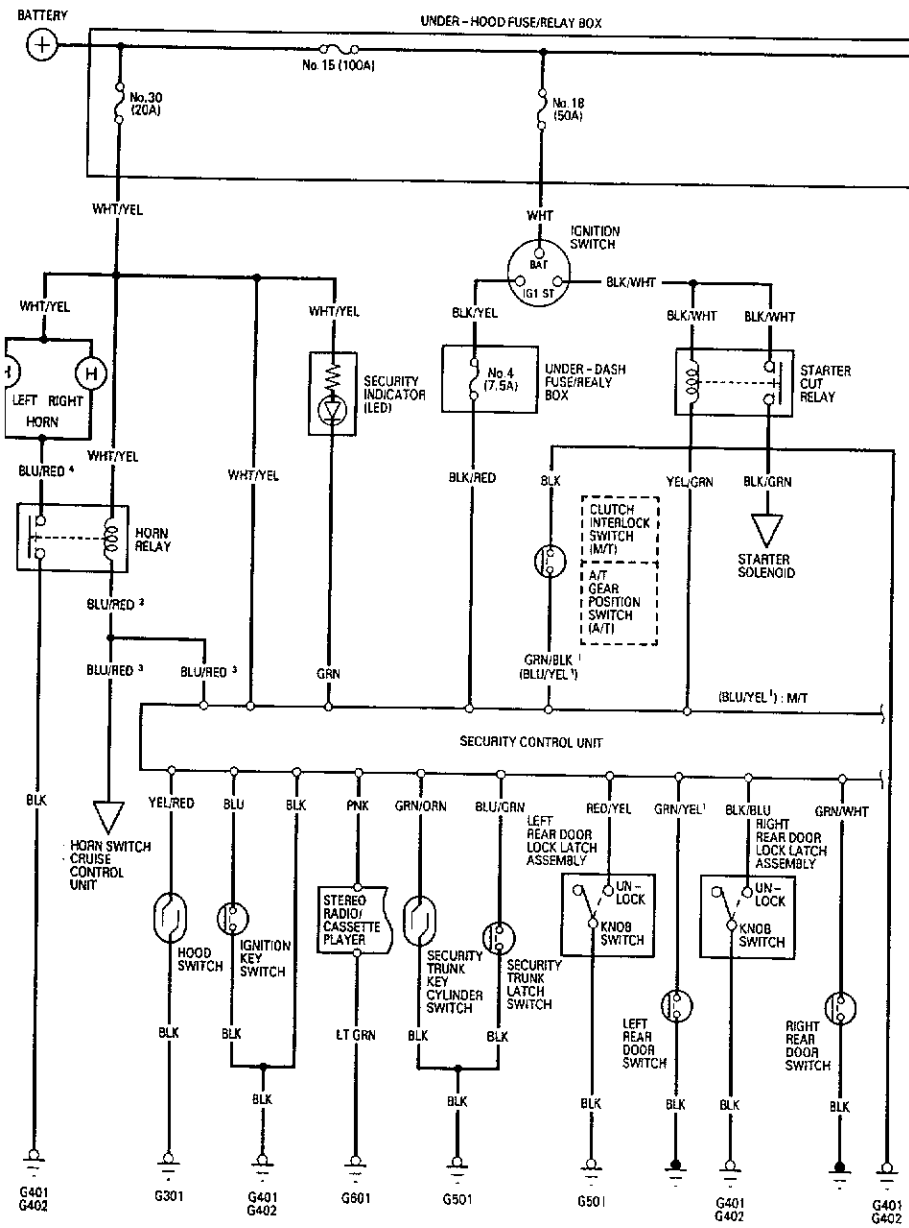

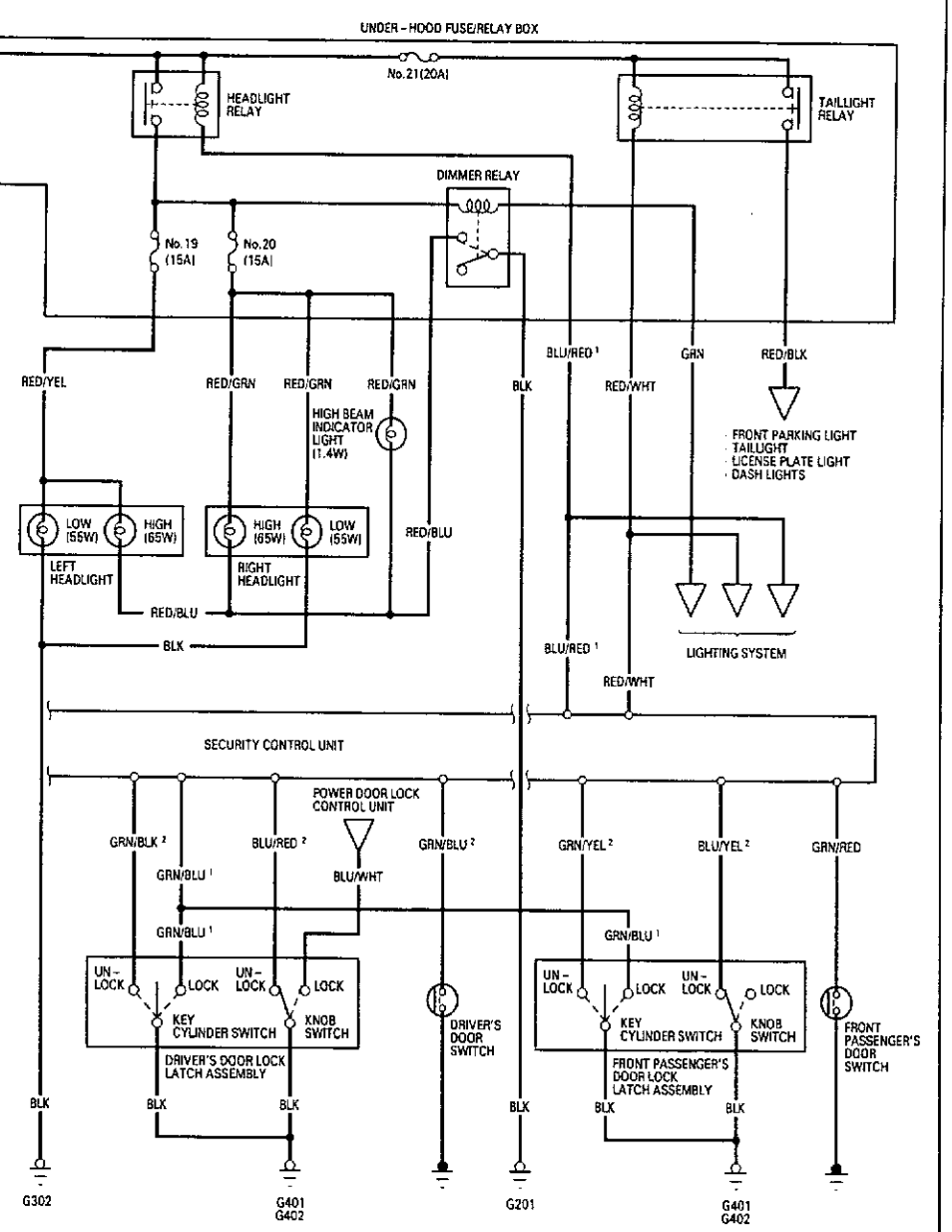

Security Alarm System

Circuit Diagram (Canada)

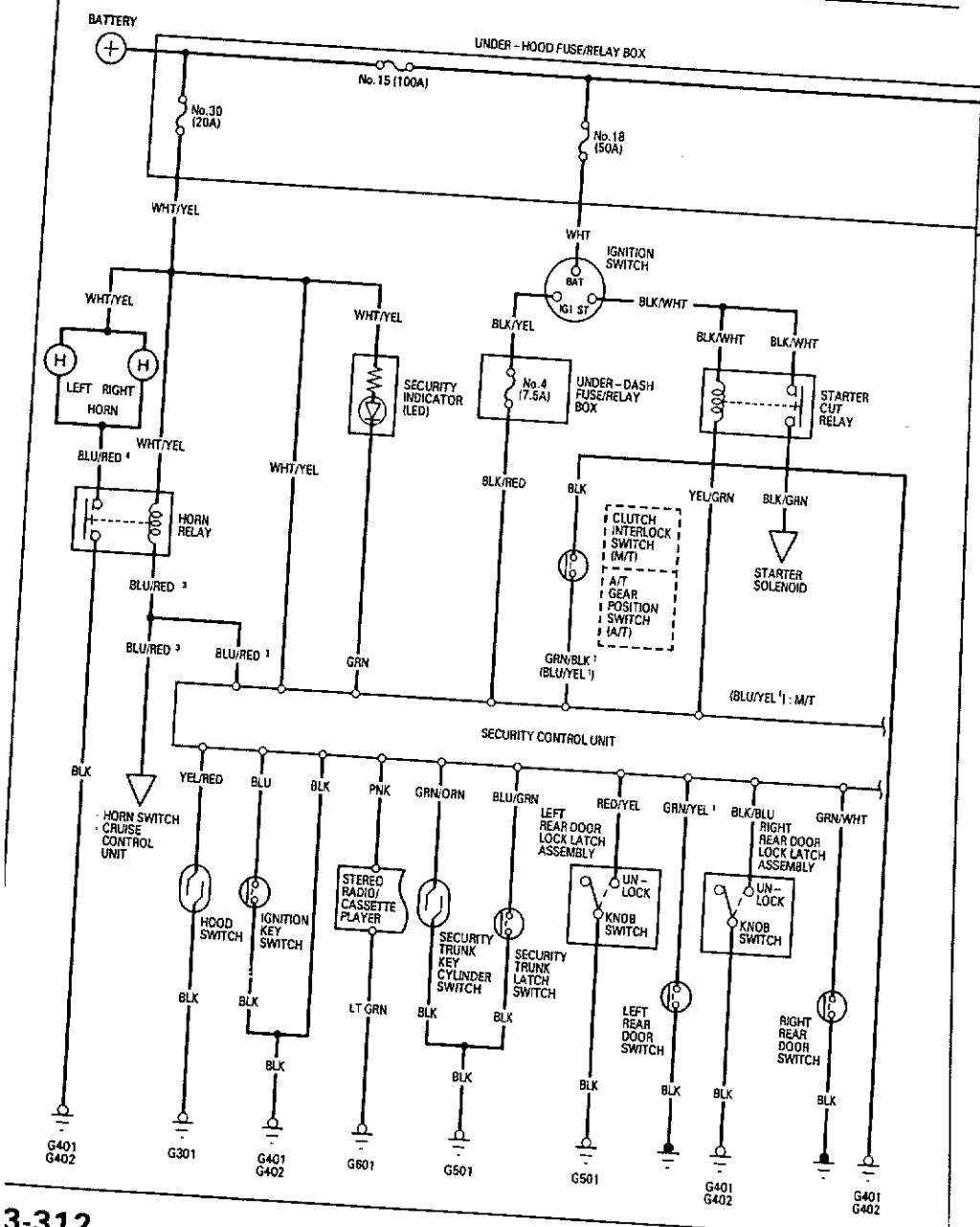

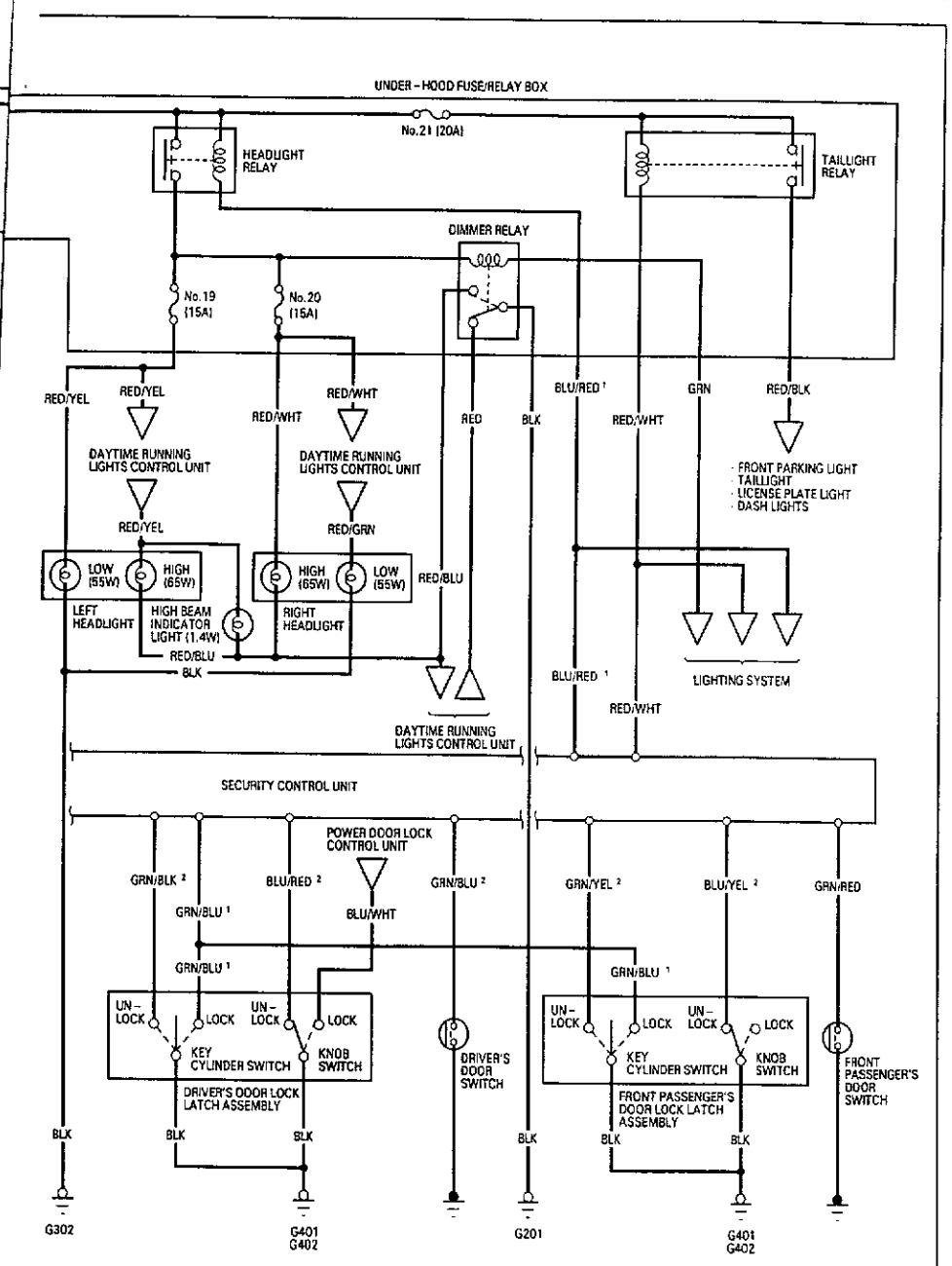

Security Alarm System

Troubleshooting

NOTE: The numbers in the table show the troubleshooting sequence.

Symptom \ Item to be inspected		Blown No. 30 (20 A) fuse (in the under-hood fuse/relay box)	Blown No. 4 (7.5 A) fuse (in the under-dash fuse/relay box)	Faulty indicator light (LED)	Horn circuit	Starting system	A/T: A/T gear position switch M/T: Clutch interlock switch	Lighting sytem	Door key switch	Ignition key switch	Security trunk key cylinder switch	Security trunk latch switch	Hood switch	Door switch	Security control unit input	Poor ground	Open circuit in wires, loose or disconnected terminals
Security alarm can't be set (and indicator light does not flash).		1	2	3						4						G401 G402	WHT/YEL, BLK/RED GRN, or BLU
Starting system does not operate.						1	2								3	G401 G402	BLK/WHT, *GRN/BLK[1], YEL/GRN or *[1]BLU/YEL[1]
Security alarm can be set, but alarm does not operate when the trunk, hood or either door is unlocked without the key.	Horn alarm	1			2										3		WHT/YEL, BLU/RED[3], or BLU/GRN
	Headlight alarm							1							2		BLU/RED[1] or RED/WHT
	Both alarms														1		
Alarm not cancelled when the door is opened with the key.									1						2	G401 G402	BLU/RED[1], GRN/YEL[2], GRN/BLK[2], or BLU/RED[3]
Alarm not cancelled when the key is inserted in the ignition switch.			1							2					3		BLK/RED or BLU
Alarm not cancelled when the trunk lid is opened with the key.											1	2			3	G501	GRN/ORN or BLU/GRN
Alarm does not operate when the hood is opened.													1		2	G301	YEL/RED
Alarm does not operate when the door is opened.														1	2	G401 G402	GRN/YEL[1], GRN/WHT, GRN/BLU[2] or GRN/RED

: A/T
1: M/T

Control Unit Input Test

CAUTION:
- **All SRS electrical wiring harnesses are covered with yellow outer insulation.**
- **Before disconnecting the SRS wire harness, install the short connector (s) on the airbag (s).**
- **Replace the entire affected SRS harness assembly if it has an open circuit or damaged wiring.**

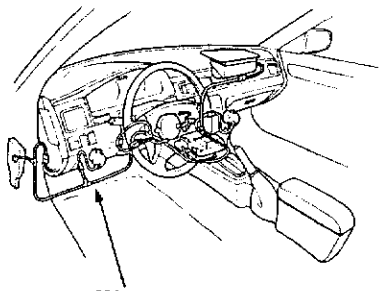

Remove the glove box. Disconnect the 12-P and 18-P connectors from the security control unit. Inspect the connector terminals to be sure they are all making good contact.

- If the terminals are bent, loose, or corroded, repair them as necessary, and recheck the system.
- If the terminals look OK, make the following input tests at the connector terminals.
  - If any test indicates a problem, find and correct the cause, then recheck the system.
  - If all the input tests prove OK, the control unit must be faulty; replace it.

NOTE: Remove the No.37 (15 A) fuse from the under-hood fuse/relay box.

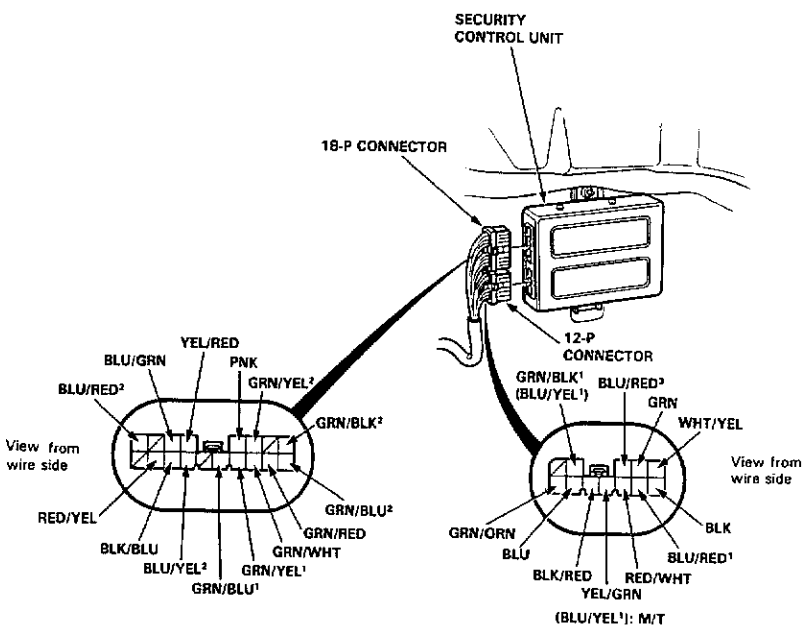

(cont'd)

Security Alarm System

Control Unit Input Test (cont'd)

No.	Wire	Test condition	Test: Desired result	Possible cause if result is not obtained
1	BLK	Under all conditions.	Check for continuity to ground: There should have continuity.	• Poor ground (G401, G402). • An open in the wire.
2	WHT/YEL	Under all conditions.	Check for voltage to ground: There should be battery voltage.	• Blown No. 30 (20 A) fuse (in the under-hood fuse/relay box). • An open in the wire.
3	GRN	Ignition switch ON.	Connect to ground: Security indicator should come on.	• Blown No. 30 (20 A) fuse (in the under-hood fuse/relay box). • Faulty security indicator. • An open in the wire.
4	BLK/RED	Ignition switch ON.	Check for voltage to ground: There should be battery voltage.	• Blown No.4 (7.5 A) fuse (in the under-dash fuse/relay box). • An open in the wire.
5	YEL/GRN	Ignition switch at START.	Check for voltage to ground: There should be battery voltage.	• Fualty starter cut relay. • An open in the wire.
6	BLU/RED[3]	Under all conditions.	Connect to ground: All horns should sond.	• Blown No. 30 (20 A) fuse (in the under-hood fuse/relay box). • Faulty horn relay. • Either horn faulty. • Poor ground (G401, G402) • An open in the wire.
7	BLU/RED[1]	Under all conditions.	Connect to ground: Headlights should come on.	• Faulty headlight relay. • Faulty headlight system. • An open in the wire.
8	RED/WHT	Under all conditions.	Connect to ground: taillights shoud come on.	• Faulty taillight relay. • Faulty taillight system. • An open in the wire.

No.	Wire	Test condition	Test: Desired result	Possible cause if result is not obtained
9	GRN/BLK (BLU/YEL[2])	Ignition switch On and; (M/T): clutch pedal pushed (A/T): A/T gear position P.	Check for continuity to ground: There should be continuity.	• Faulty clutch interlock switch (M/T). • Faulty A/T gear position switch (A/T). • An open in the wire.
10	YEL/RED	Hood open.	Check for continuity to ground. There should be continuity.	• Faulty hood switch (Misadjusted hood switch). • Poor ground (G301). • An open in the wire.
		Hood closed.	Check for continuity to ground: There should be no continuity	
11	BLU	Ignition key is inserted into the ignition switch.	Check for continuity to ground: There should be continutiy.	• Faulty ignition key switch. • Poor ground (G401, G402). • An open in the wire.
		Ignition key is removed from the ignition switch.	Check for continuity to ground: There should be no continuity.	
12	PNK	Under all conditions.	Check for continuity to ground. There should be continuity.	• Poor ground (G601). • An open in the wire.
13	GRN/ORN	Trunk key in UNLOCK.	Check for continuity to ground: There should be continuity.	• Faulty security trunk key cylinder swtich. • Poor ground (G501). • An open in the wire.
		Trunk key in neutral position.	Check for continuity to ground: There should be no continuity.	• Faulty security trunk key cylinder switch. • Short to ground.
14	BLU/GRN	Trunk lid open.	Check for continuity to ground: There should be continuity.	• Faulty security trunk latch switch. (Misadjusted security trunk latch switch). • Poor ground (G501). • An open in the wire.
		Trunk lid closed.	Check for continuity to ground: There should be no continuity.	

(BLU/YEL[1]): M/T

(cont'd)

Control Unit Input Test (cont'd)

No.	Wire	Test condition	Test: Desired result	Possible cause if result is not obtained
15	GRN/BLU[2]	Driver's door opened. Driver's door closed.	Check for continuity to ground: When the door is opened, there should be continuity, and when the door is closed, there should be no continuity.	• Faulty driver's door or front passenger's door switches. • An open in the wire.
16	GRN/RED	Front passenger's front door opened. Front passenger's door closed.		
17	GRN/YEL[1]	Left rear door opened. Left rear door closed.	Check for continuity to ground: When the door is opened, there should be continuity, and when the door is closed, there should be no continuity.	• Faulty left rear door or right rear door switches. • An open in the wire.
18	GRN/WHT	Right rear door opened. Right rear door closed.		
19	GRN/BLK[2]	Driver's door key in UNLOCK.	Check for continuity to ground: There should be continuity.	• Faulty driver's door or front passenger's door key switches. • Poor ground (G401, G402) • An open in the wire.
20	GRN/TEL[2]	Front passenger's front door key in UNLOCK.		
21	GRN/BLU[1]	Driver's door key in LOCK. Front passenger's front door key in LOCK.	Check for continuity to ground: There should be continuity, as the door keylock is turned in LOCK.	• Faulty driver's door or front passenge's door key switches. • Poor ground (G401, G402). • An open in the wire.
22	BLU/RED[2]	Driver's door lock knob in UNLOCK.	Check for continuity to ground: There should be continuity.	• Faulty driver's door lock knob switch (Built in the actuator). • Poor ground (G401, G402) • An open in the wire.
23	BLU/YEL[2]	Front passenger's front door lock knob in UNLOCK.	Check for continuity to ground: There should be continuity.	• Faulty front passenger's door lock knob switch (Built in the actuator). • Poor ground (G401, G402). • An open in the wire.
24	RED/YEL	Left rear door lock knob in UNLOCK.	Check for continuity to ground: There should be continuity.	• Faulty left rear door lock knob switch (Built in the actuator). • Poor ground (G501). • An open in the wire.
25	BLK/BLU	Right rear door lock knob in UNLOCK.	Check for continuity to ground: There should be continuity.	• Faulty right rear door lock knob switch (Built in the actuator). • Poor ground (G401, G402). • An open in the wire.

Security Indicator Test/Replacement

1. Remove the door panel (see section 20).
2. Remove the screw from the security indicator.
3. Remove the security indicator from the door panel.

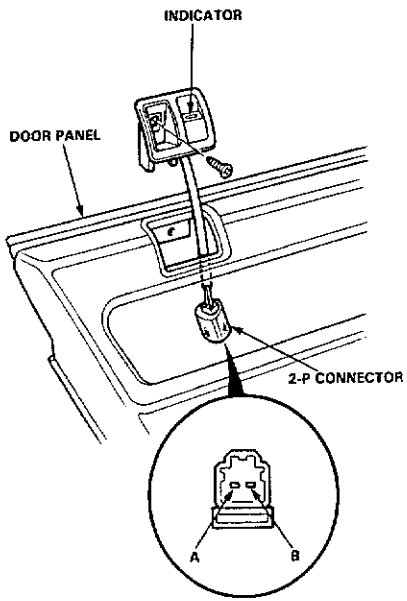

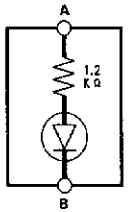

4. Test the security indicator by connecting battery power to the A terminal, and ground to the B terminal.
5. If the security indicator does not come on, replace it.

Hood Switch Test/Replacement

1. Open the hood.
2. Disconnect the 2-P connector from the hood switch.
3. Check for continuity between the terminals in each switch position according to the table.

Terminal / Position	A	B
Hood open (Lever released)	○	○
Hood closed (Lever pushed down)		

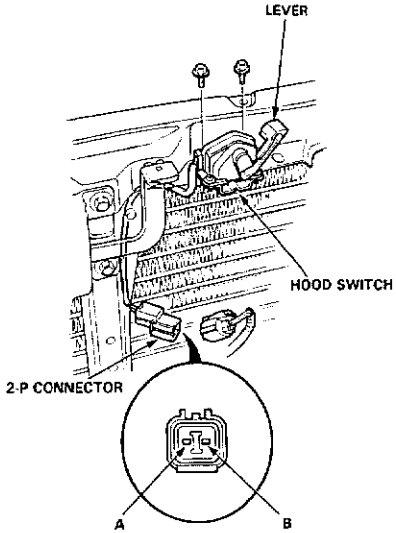

Security Alarm System

Security Trunk Latch Switch Test

1. Open the trunk lid and remove the trunk rear trim panel.
2. Disconnect the 2-P connector from the security trunk latch switch.
3. There should be continuity between the A and B terminals with the trunk lid opened.

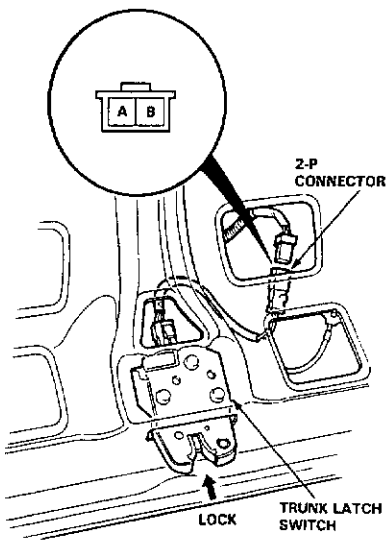

4. There should be no continuity with the trunk latch in Lock (trunk lid closed) position.

Security Trunk Key Cylinder Switch Test

1. Open the trunk lid and remove the trunk rear trim panel.
2. Disconnect the 2-P connector from the security trunk key cylinder switch.
3. There should be continuity between the A and B terminals when the trunk keylock is turned to UNLOCK with the key.
   There should be no continuity when the keylock is released.

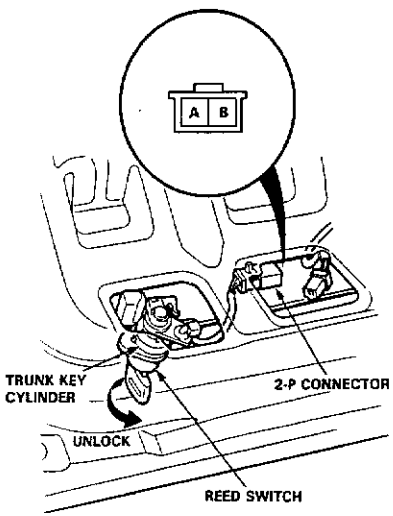

Door Key Cylinder Switch Test

1. Remove the door panel.
2. Disconnect the 8-P connector from the latch assembly.

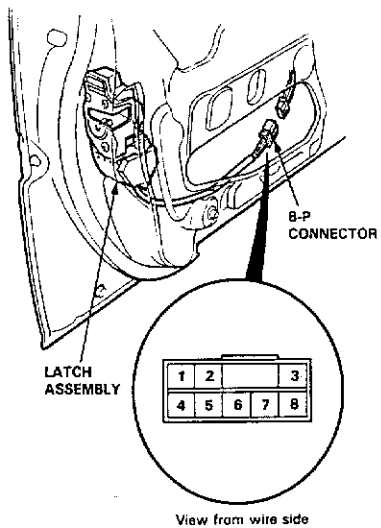

3. Check for continuity between the terminals in each switch position according to the table.

Position \ Terminal	1	2	3
LOCK (Driver's door only)		○	○
UNLOCK	○	○	

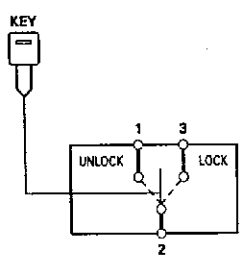

Front Passenger's Door Lock Knob Switch Test

1. Remove the door panel.
2. Disconnect the 8-P connector from the latch assembly.

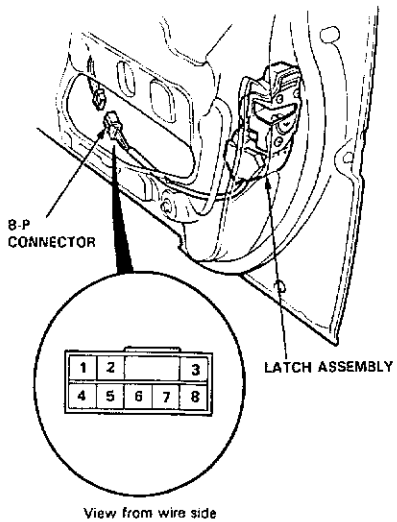

3. Check for continuity between the terminals in each switch position according to the table.

Position \ Terminal	4	5
LOCK		
UNLOCK	○	○

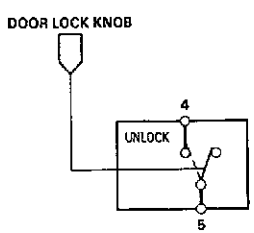

Rear Door Lock Knob Switch Test

1. Remove the door panel.
2. Disconnect the 4-P connector from the actuator.

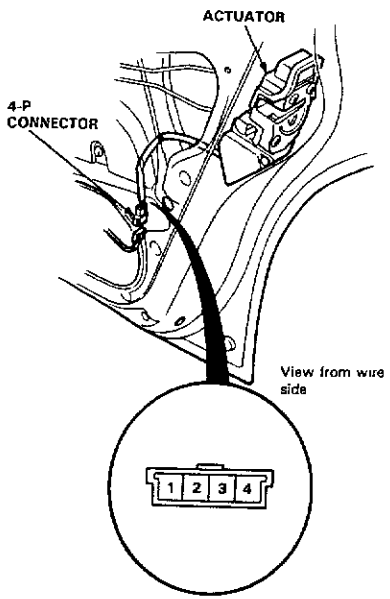

3. Check for continuity between the terminals in each switch position according to the table.

Terminal / Position	1	2
LOCK		
UNLOCK	○	○

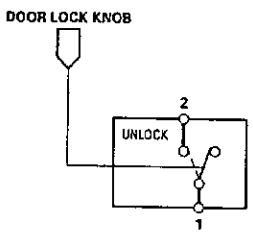

Supplemental Restraint System (SRS)

Component Location Index 23-324
Description 23-325
Circuit Diagram 23-326
Wiring Locations 23-328
Precautions/Procedures 23-329
Troubleshooting 23-334
Airbag Assembly
  Replacement 23-354
  Disposal 23-358
Cable Reel
  Replacement 23-360
Dash Sensor
  Replacement 23-364
SRS Unit
  Replacement 23-366

Supplemental Restraint System (SRS)

Component Location Index

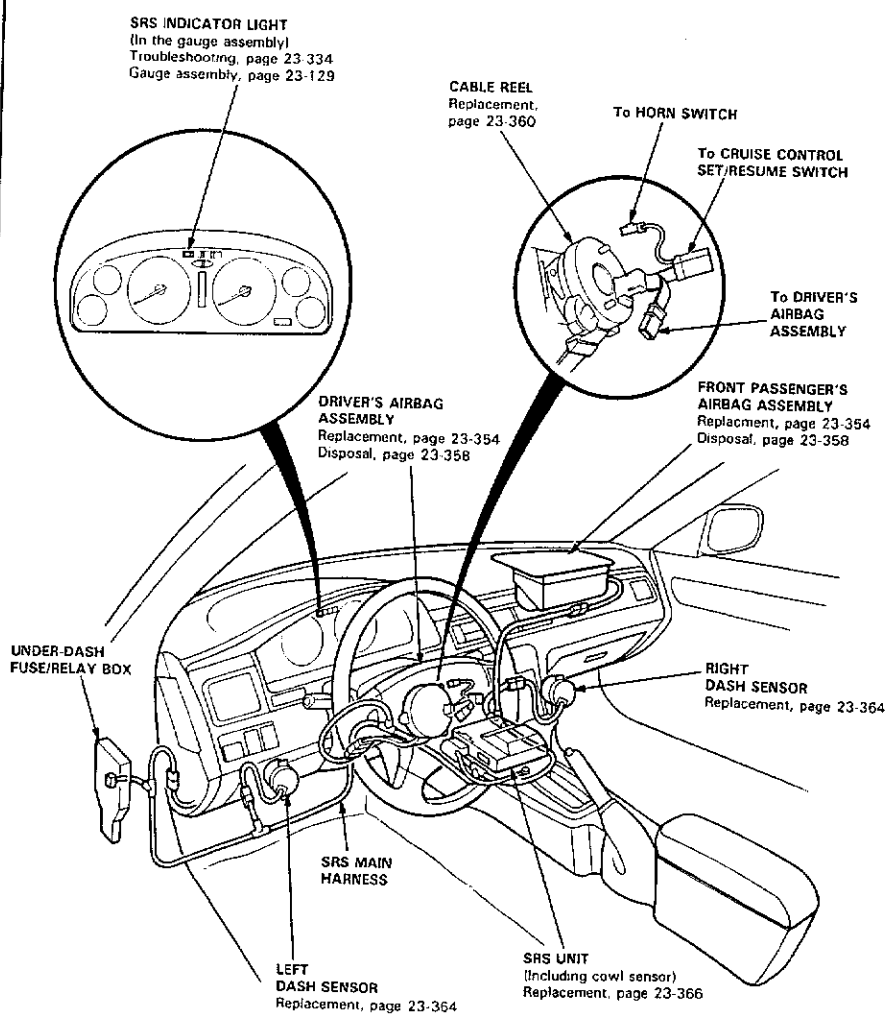

Description

The SRS is a safety device which, when used in conjunction with the seat belt, is designed to help protect the driver (and front passenger) in a frontal impact exceeding a certain set limit.
The system consists of left and right dash sensors, the SRS unit (includes cowl sensor), the cable reel, driver's airbag and front passenger's airbag (GS model).

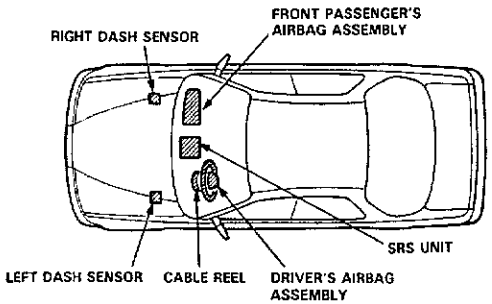

Operation
As shown in the diagram below, the left and right dash sensors are connected in parallel. The parallel set of sensors is connected in series to each airbag inflator circuit and the car battery. In addition, a back-up power circuit is connected in parallel with the car battery. The back-up power circuit and the cowl sensor are located inside the SRS unit.

For the SRS to operate:
(1) One or both cowl sensor contacts and one or both dash sensors must activate.
(2) Electrical energy must be supplied to the airbag inflator by the battery, or by the back-up power circuit if the battery voltage is too low.
(3) The inflator charge must ignite and deploy the airbag.

It takes about 0.1 second from the beginning of the airbag deployment until it is completely deflated (frontal collision against a fixed wall at a speed of 30 mph [50 km/h]).

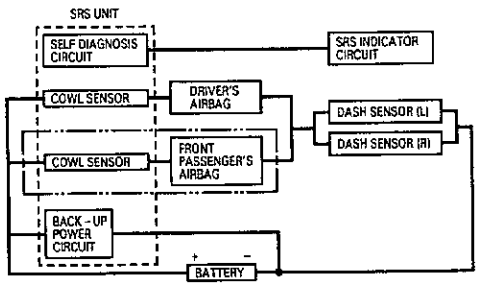

Self-diagnosis system
A self-diagnosis circuit is built into the SRS unit; when the ignition switch is turned ON, the SRS indicator light comes on and goes off after about six seconds if the system is operating normally. If the light does not come on, or does not go off after six seconds, or if it comes on while driving, it indicates an abnormality in the system. The system must be inspected and repaired as soon as possible.

Supplemental Restraint System (SRS)

Circuit Diagram (Without Front Passenger's Airbag)

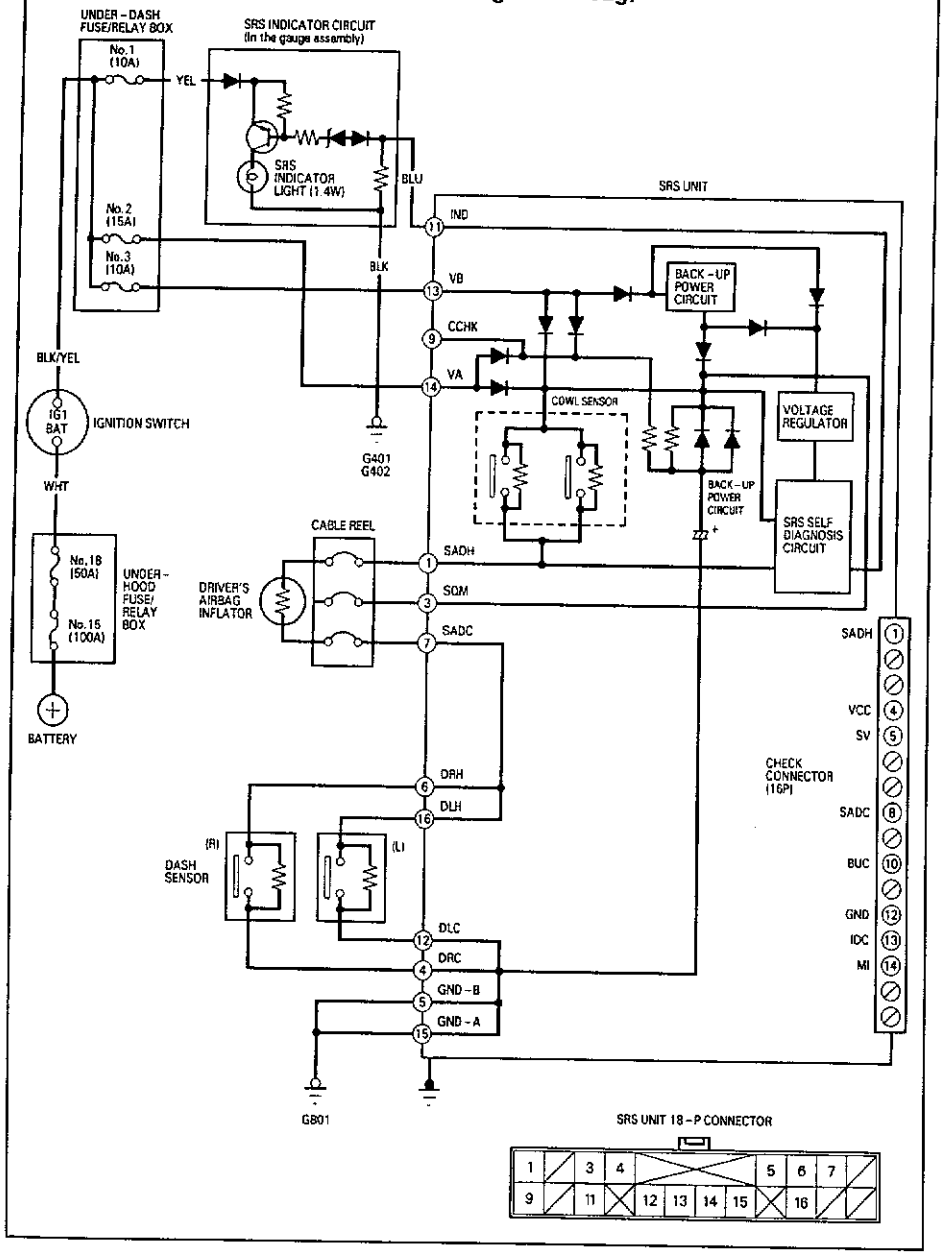

Circuit Diagram (With Front Passenger's Airbag)

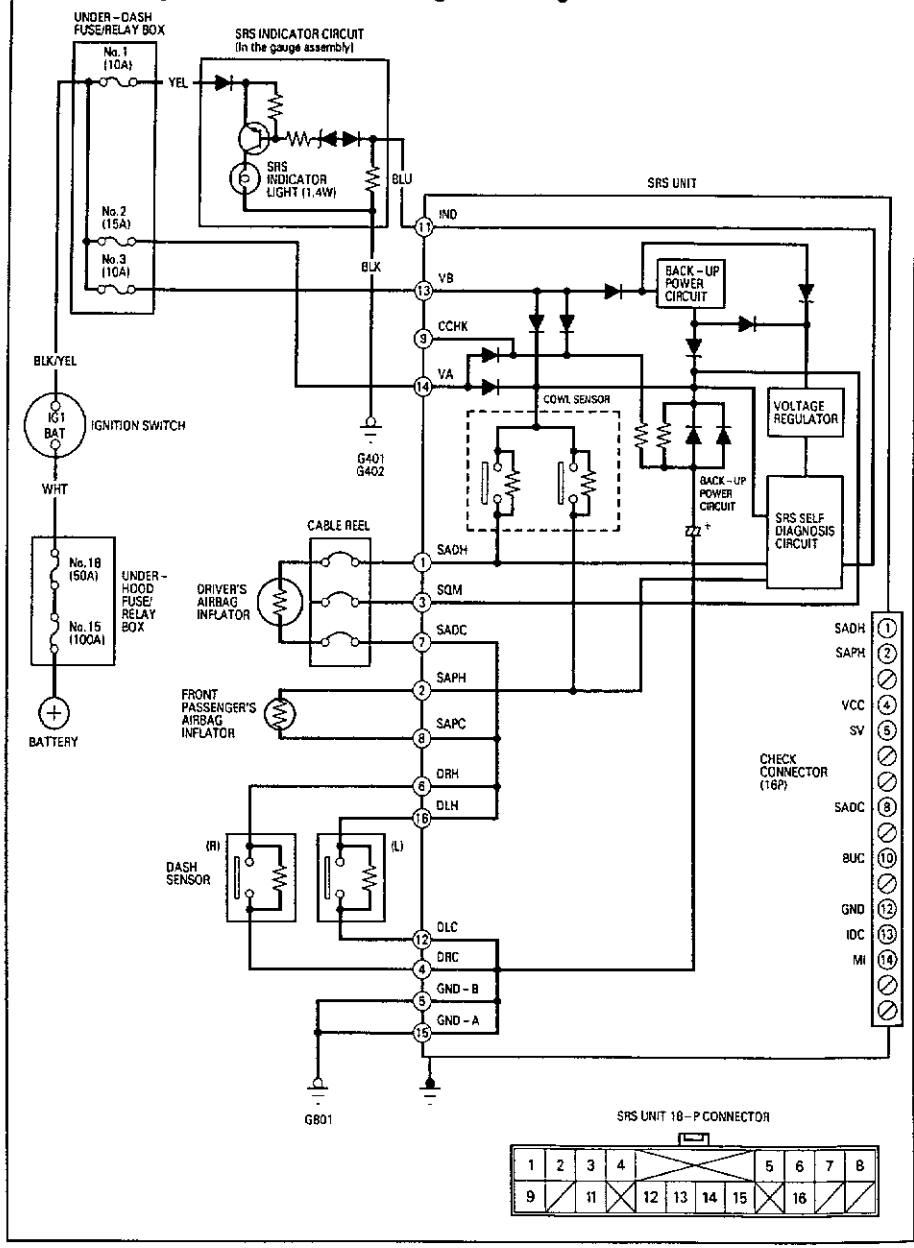

Supplemental Restraint System (SRS)

Wiring Locations

CAUTION: Make sure all SRS ground locations are clean and grounds are securely attached.

NOTE:
- All SRS electrical wiring harnesses are covered with yellow outer insulation.
- Replace the entire affected SRS harness assembly if it has an open circuit or damaged wiring.

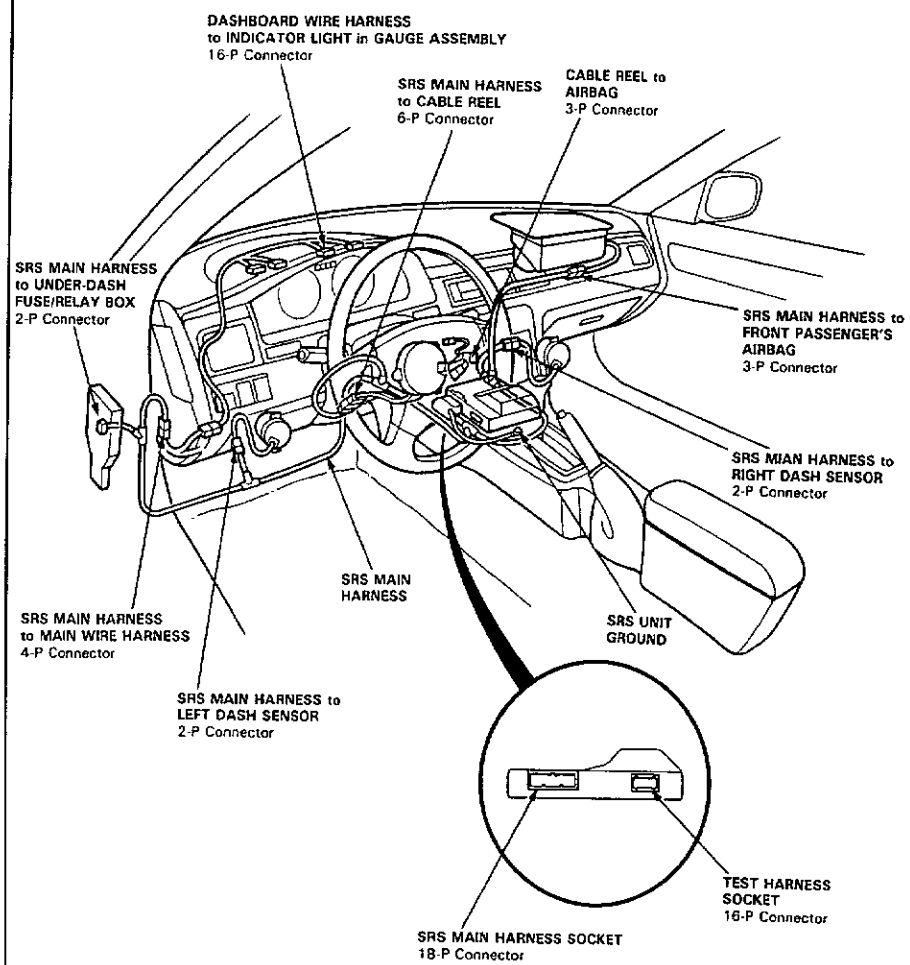

General Precautions

- Carefully inspect any SRS part before you install it. Do not install any part that shows signs of being dropped or improperly handled, such as dents, cracks or deformation:

  – Airbag assembly (driver's and front passenger's).
  – Dash sensors.
  – Cable reel.
  – SRS unit.

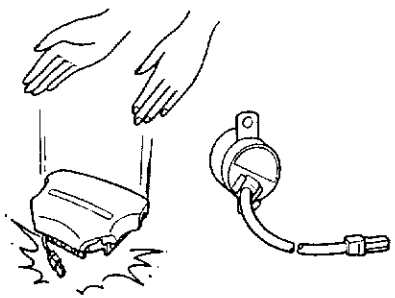

- Use only a digital multimeter (KS-AHM-32-003) to check the system. Using an analog circuit tester may cause an accidental deployment and possible injury.
- Do not install used SRS parts from another car. When making SRS repairs, use only new parts.
- Except when performing electrical inspections, always disconnect both the negative cable and positive cable at the battery before beginning work.
- Replacement of the combination light and wiper/washer switches and cruise control switch can be done without removing the steering wheel:
  – Combination light and wiper/washer switch replacement (see page 23-184).
  – Cruise control switch replacement (see page 23-300).

Airbag Handling and Storage

Do not try to disassemble the airbag assembly. It has no serviceable parts. Once an airbag has been operated (deployed), it cannot be repaired or reused.

For temporary storage of the airbag assembly during service, please observe the following precautions:

- Store the removed airbag assembly with the pad surface up.

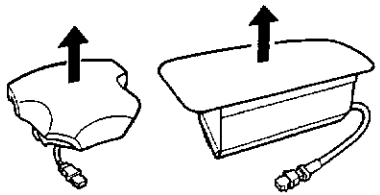

⚠WARNING If the airbag is improperly stored face down, accidental deployment could propel the unit with enough force to cause serious injury.

- Store the removed airbag assembly on a secure flat surface away from any high heat source (exceeding 212°F/100°C) and free of any oil, grease, detergent or water.

  CAUTION: Improper handling or storage can internally damage the airbag assembly, making it inoperative.
  If you suspect the airbag assembly has been damaged, install a new unit and refer to the Deployment/Disposal Procedures for disposing of the damaged airbag.

Wiring Precautions

- Never attempt to modify, splice or repair SRS wiring.

NOTE: SRS wiring can be identified by special yellow outer protective covering.

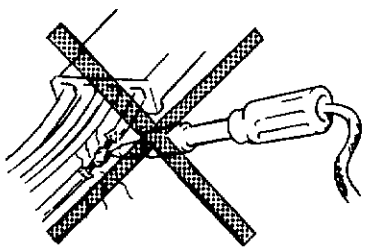

- Be sure to install the harness wires so that they are not pinched or interfering with other car parts.

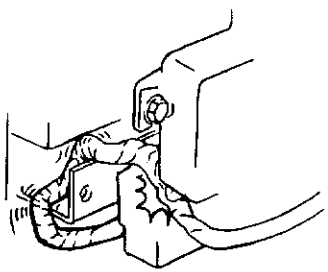

- Make sure all SRS ground locations are clean and grounds are securely fastened for optimum metal-to-metal contact. Poor grounding can cause intermittent problems that are difficult to diagnose.

Installing the short connector

⚠WARNING To avoid accidental deployment and possible injury, always install the protective short connector(s) on the driver's and passenger's airbag connector(s) before working near any SRS wiring.

NOTE: The radio may have a 5-digit coded theft protection circuit. Be sure to get the customer's code number before disconnecting the battery.

1. Disconnect the battery negative cable, then disconnect the positive cable.
2. Install the short connector(s) (RED):

Driver's Side:

- Remove the access panel from the steering wheel, then remove the short connector (RED) from the panel.

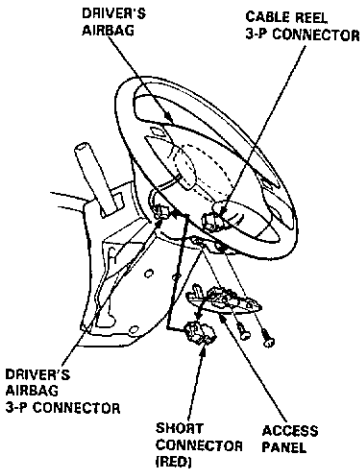

- Disconnect the 3-P connector between the driver's airbag and cable reel, then install the short connector (RED) on the airbag side of the connector.

Front Passenger's Side:

- Remove the glove box, then remove the short connector (RED) from the holder.

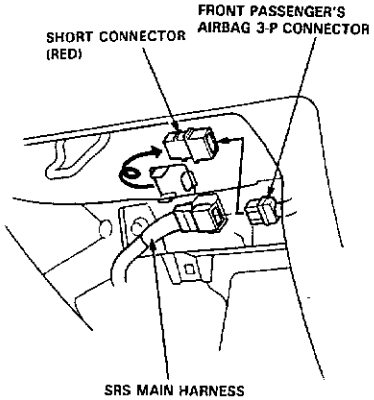

- Disconnect the 3-P connector between the front passenger's airbag and SRS main harness, then install the short connector (RED) on the airbag side of the connector.

Disconnecting the SRS Connector at the Under-dash Fuse/Relay Box

CAUTION: Avoid breaking the connector; it's double-locked.

1. First lift the connector lid with a thin screwdriver, then press the connector tab down and pull the connector out.

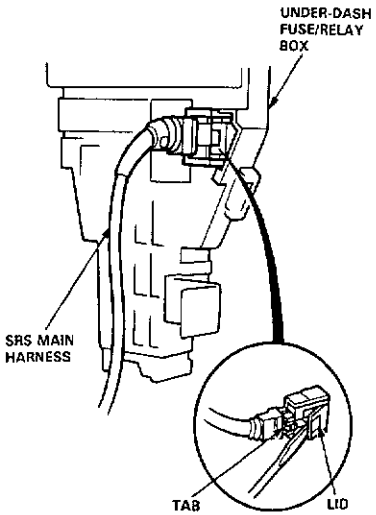

2. To reinstall the connector, push it into position until it clicks, then close its lid.

Supplemental Restraint System (SRS)

Steering-related Precautions

Steering Wheel and Cable Reel Alignment

NOTE: To avoid misalignment of the steering wheel or airbag on reassembly, make sure the wheels are turned straight ahead before removing the steering wheel.

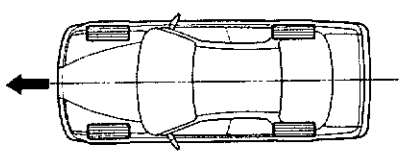

Rotate the cable reel clockwise until it stops.
Then rotate it counterclockwise (approximately two turns) until:

- The yellow gear tooth lines up with the alignment mark on the cover.
- The arrow mark on the cable reel label points straight up.

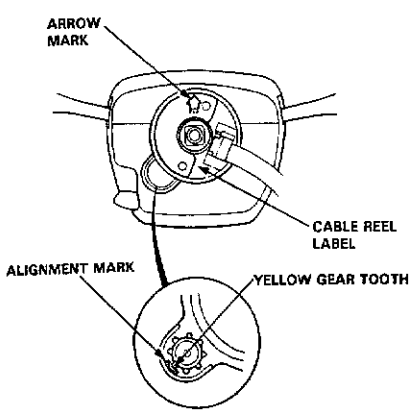

Steering Column Removal

CAUTION:

- **Before removing the steering column, first disconnect the connector between the cable reel and the SRS main harness.**
- **If the steering column is going to be removed without dismounting the steering wheel, lock the steering by turning the ignition key to 0-LOCK position or remove the key from the ignition so that the steering wheel will not turn.**

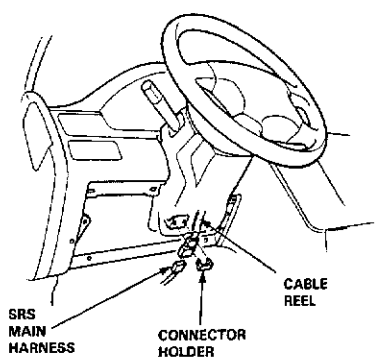

Do not replace the original steering wheel with any other design, since it will make it impossible to properly install the airbag (only use genuine Honda replacement parts).

After reassembly confirm that the wheels are still turned straight ahead and that the steering wheel spoke angle is correct. If minor spoke angle adjustment is necessary, do so only by adjusting the tie-rods, not by removing and repositioning the steering wheel.

Sensor Inspection

CAUTION: **Take extra care when painting or doing body work in the area below the dashboard. Avoid direct exposure of the sensors or wiring to heat guns, welding, or spraying equipment.**

⚠ WARNING

- **Disconnect both the negative and positive battery cables.**
- **Install the short connector(s) before working below the dashboard or near the dash sensors.**
- **After any degree of frontal body damage, inspect both dash sensors. Replace a sensor if it is dented, cracked, or deformed.**

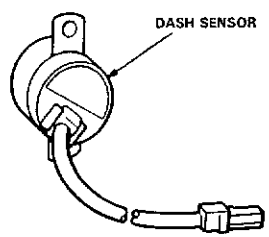

- Be sure the sensors are installed securely.

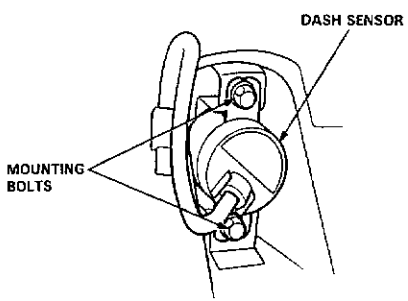

Inspection After Deployment

After a collision in which the airbags were deployed, inspect the following:

1. Inspect the dash sensors for physical damage. If the sensors are damaged, replace them.
2. Inspect all the SRS wire harnesses. Replace, don't repair, any damaged harnesses.
3. Inspect the cable reel for heat damage. If there is any damage, replace the cable reel.
4. After the car is completely repaired, turn the ignition switch on. If the SRS indicator light comes on for about six seconds and then goes off, the SRS system is OK. If the indicator light does not function properly, go to SRS Troubleshooting.

Supplemental Restraint System (SRS)

Troubleshooting

Self-diagnosis Function

The SRS unit includes a self-diagnosis function. If there is a failure in the sensors, SRS unit, inflator, or their circuits, the SRS indicator light in the gauge assembly goes ON.

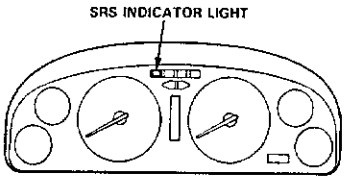

As a system check, the SRS indicator light also comes on when the ignition is first turned to the II position. If the light goes off after approximately six seconds, the system is OK.
If the SRS indicator light remains on (or fails to come on in the system check mode), one of the SRS components (or the wiring/connectors in between) is faulty.

Troubleshooting Precautions

- Always use the test harness. Do not use test probes directly on component connector terminals or wires; you may damage them or the SRS unit.
- When connecting any of the test harnesses to the system, push the connectors straight-in; do not bend the connector terminals.
- Before disconnecting any part of the SRS wire harness, install the short connector (RED) on the driver's airbag. On cars equipped with a front passenger's airbag, install short connectors on the driver's airbag and the front passenger's airbag.

SRS Indicator Light Troubleshooting

Possible conditions:

1. SRS indicator light does not come on at all—see page 23-336.
2. SRS indicator light stays on constantly—see page 23-340.
3. SRS indicator light comes on in combination with a failure of another electrical system (brake system light, malfunction indicator lamp etc.). Check for damage/corrosion at the under-dash fuse/relay box connector.

NOTE:
- Before starting the applicable troubleshooting, check the condition of all SRS connectors and ground points.
- If the fault is not found after completing the applicable troubleshooting, substitute a known-good SRS unit and check whether the indicator light goes off.

Short Connector Installation

WARNING **To avoid accidental deployment and possible injury, always install the protective short connector on the driver's airbag connector and, on cars equipped with front passenger's airbag, install protective short connectors on the driver's and front passenger's airbag before working near any SRS wiring.**

NOTE: The radio may have a 5-digit coded theft protection circuit. Be sure to get the customer's code number before disconnecting the battery.

1. Disconnect the battery negative cable, then disconnect the positive cable.
2. Install the short connector(s):

Driver's Side:
- Remove the access panel from the steering wheel, then remove the short connector (RED) from the panel.

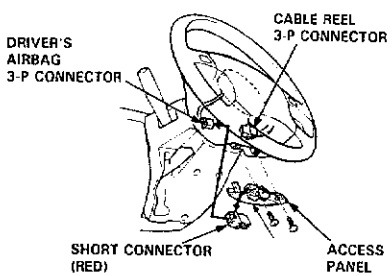

- Disconnect the connector between the driver's airbag and cable reel, then install the short connector (RED) on the airbag side of the connector.

Front Passenger's Side (GS model):
- Remove the glove box.
- Disconnect the connector between the front passenger's airbag and SRS main harness, then install the short connector (RED) on the airbag side of the connector.

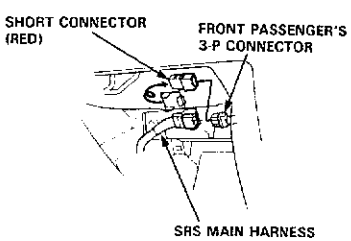

Test Harnesses and Attachment Points

Test Harness A

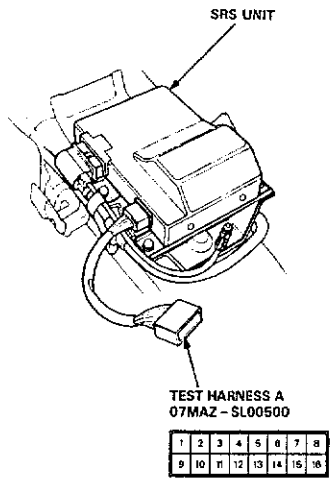

Test Harness B

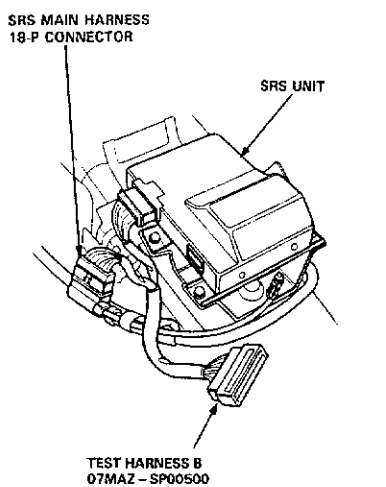

ROW A (SRS UNIT END)

A	1	2	3	4	5	6	7	8	9	10	11	12	13	14	15	16	17	18
B	1	2	3	4	5	6	7	8	9	10	11	12	13	14	15	16	17	18

ROW B (WIRE HARNESS END)

Test Harness C

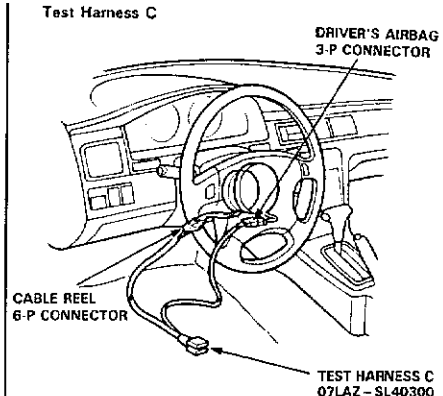

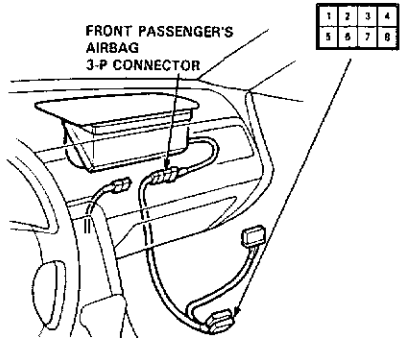

Test Harness D

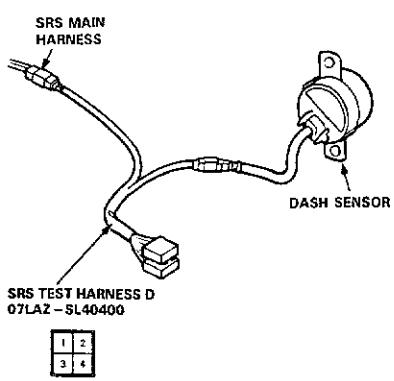

Troubleshooting

The SRS Indicator Does Not Light

CAUTION:
- **Use only a digital multimeter (KS-AHM-32-003) to check the system.**

Disconnect the battery negative cable and then the positive cable. Install the short connector(s) on the airbag(s) (see page 23-330).

NOTE: The radio may have a 5-digit coded theft protection circuit. Be sure to get the customer's code number before disconnecting the battery.

Reconnect the battery positive cable and then the negative cable.

Turn the ignition switch ON.

Do any other indicator lights (ABS etc.) come on (in the gauge assembly)?

- NO → Inspect the No. 1 (10 A) fuse (Under-dash fuse/relay box).
  - Is No. 1 fuse OK?
    - NO → **Replace the fuse.**
    - YES → **Repair open in dashboard wire harness between the No. 1 fuse and gauge assembly.**
- YES → Turn the ignition switch OFF.

Disconnect the SRS main harness 18-P connector from the SRS unit.

Turn the ignition switch ON.

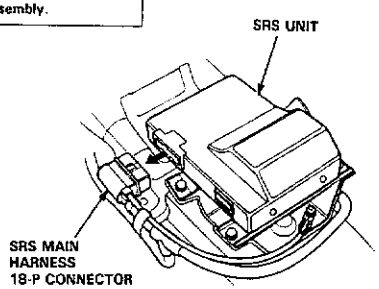

Does the SRS indicator light come on?

- YES → **The SRS unit is faulty.**
- NO → Turn the ignition switch OFF

(To page 23-337)

(From page 23-336)

Disconnect the SRS main harness 4-P connector from the main wire harness.

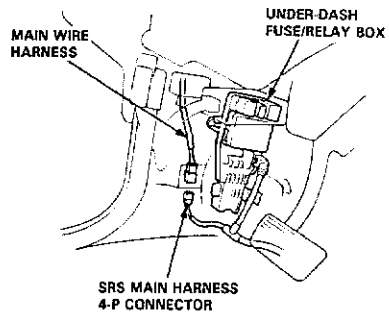

Turn the ignition switch ON.

Is SRS indicator light ON?

- YES → **The SRS main harness is faulty.**
- NO → Turn the ignition switch OFF.

Remove the gauge assembly, then inspect the SRS indicator light bulb.

Is the SRS indicator light bulb OK?

- NO → **Replace the indicator light bulb.**
- YES → Connect a voltmeter between the No. 12 terminal of the 16-P connector and body ground.

Turn the ignition switch ON.

Measure the voltage between the No. 12 terminal and body ground.

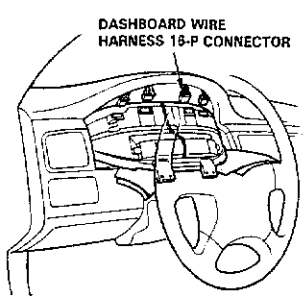

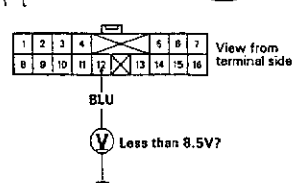

(To page 23-338)

(cont'd)

Troubleshooting (cont'd)

(From page 23-337)

Is there less than 8.5 V with the ignition switch ON?

NO → Short in BLU wire of the dashboard wire harness. Replace the dashboard wire harness.

YES

Turn the ignition switch OFF.

Connect the voltmeter between the No. 3 terminal (+) and the No. 7 terminal (−) of the dashboard wire harness 16-P connector.

Turn the ignition switch ON.

Measure the voltage between the No. 3 terminal and the No. 7 terminal.

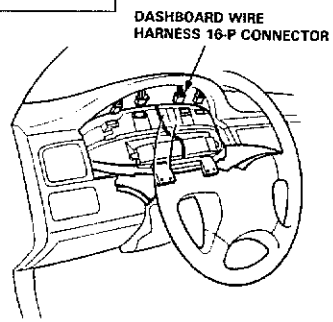

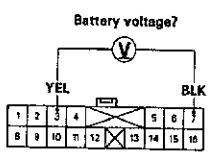

View from terminal side.

Is there battery voltage?

NO → Check for continuity between the No. 7 terminal and body ground.

Is there continuity?

NO → Repair open in the BLK wire (No. 7 terminal) between the gauge assembly and body ground or look for a poor ground (G401, 402).

YES → Repair open in the YEL wire (No. 3 terminal) of the dashboard wire harness between the gauge assembly and the No. 1 (10 A) fuse in the under-dash fuse/relay box.

YES

Turn the ignition switch OFF.

(To page 23-339)

(From page 23-338)

Reconnect each connector to the gauge assembly and SRS unit then connect Test Harness A to the SRS unit.

Measure the voltage between the No. 13 terminal and body ground for six seconds after ignition is first turned on.

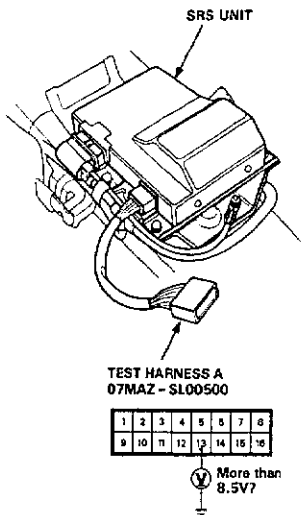

Is there more than 8.5 V?

NO → SRS indicator circuit (in the gauge assembly) is faulty.

YES

SRS unit is faulty.

(cont'd)

SRS Indicator Light Stays on Continuously

1. Make a photocopy of this page (without front passenger's airbag), or the next page (with front passenger's airbag).

2. Connect Test Harness A (07MAZ–SL00500) to the SRS unit as shown.

3. Turn the ignition switch ON.
   - Voltages in the chart assume the car's "battery voltage" is about 12 volts. Less than 12 volts will result in different or possibly false readings.
   - Do not disconnect the airbag from the circuit when checking SRS unit voltages.

4. First, check for voltage between Test Connector Terminal No. 12 and ground.
   - If voltage is indicated, there is a poor ground (see page 23-353).
   - Continue with checking all the other terminals if no voltage is indicated.

5. Record your voltage readings, for each terminal, in the row of blank boxes near the top of the chart.

6. Compare each reading with the voltage ranges listed in the column below it. If the reading is within a range, circle that range.

   - If you circled all the Failure Mode ranges across any row, check the car for the Probable Failure Mode listed at the end of the row. (Refer to the letter for that Mode on the following pages).

   - If you did not circle all the ranges across any row, replace the SRS unit with a known-good unit, and retest.
     - If all your voltage readings are now Normal, replace the SRS unit.
     - If your voltage readings are still not normal but they don't fit within a complete row of Failure Mode ranges, check the condition of the terminals in each of the SRS connectors shown in the system diagram on page 23-328.

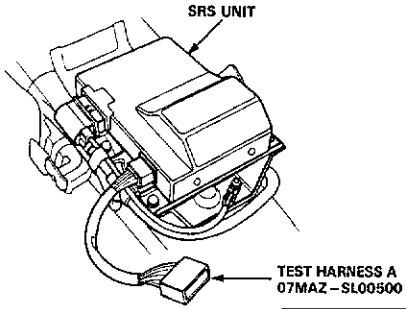

Without Front Passenger's Airbag:

NOTE: Do not disconnect the airbag when checking SRS unit voltages.

1	2	3	4	5	6	7	8
9	10	11	12	13	14	15	16

Test Harness Terminal	1 SADH	–	–	4 VCC	5 SV	–	–	8 SADC	–	10 BUC1	–	12 GND	13 IDC	14 M1	–	–	Probable Failure Mode
Normal Voltage	5.2 -7.3	–	–	4.5 -5.5	12.0 -14.3	–	–	5.6 -7.3	–	11.5 -14.5	–	0	8.5 -13.6	11.2 -14.6	–	–	
Your Voltage Reading		–	–			–	–	–	–		–				–	–	
Failure Mode Voltage	3.7 -4.8	–	–	4.5 -5.5	12.0 -14.3	–	–	3.7 -4.9	–	11.5 -14.5	–	0	2.0 -8.5	11.2 -14.6	–	–	A Open in one cowl sensor contact.
	0	–	–	4.5 -5.5	12.0 -14.3	–	–	0	–	11.5 -14.5	–	0	2.0 -8.5	11.2 -14.6	–	–	B • Open in both cowl sensor contact. • Short in one dash sensor. • Short to driver's airbag inflator (body ground).
	11.2-14.6	–	–	4.5 -5.5	12.0 -14.3	–	–	11.2 14.6	–	11.5 -14.5	–	0	2.0 -8.5	11.2 -14.6	–	–	C Short in cowl sensor or open in both dash sensors.
	7.4 -9.6	–	–	4.5 -5.5	12.0 -14.3	–	–	7.4 -9.7	–	11.5 -14.5	–	0	2.0 -8.5	11.2 -14.6	–	–	D Open in one dash sensor
	11.2 -14.6	–	–	4.5 -5.5	12.0 -14.3	–	–	3.7 -4.9	–	11.5 -14.5	–	0	2.0 -8.5	11.2 -14.6	–	–	E Open in driver's airbag inflator or cable reel.
	5.6 -7.3	–	–	0	0	–	–	5.6 -7.3	–	11.5-14.5	–	0	2.0 -8.5	11.2 14.6	–	–	H Blown SRS fuse (No. 3) or open in the wire.
	5.6 -7.3	–	–	4.5 -5.5	12.0 -14.3	–	–	5.6 -7.3	–	11.5 -14.5	–	0	0 (8.5 -13.6)	11.2-14.6	–	–	I Short (or open) in SRS indicator wire harness.

With Front Passenger's Airbag:

NOTE: Do not disconnect the airbags when checking SRS unit voltages.

Test Harness Terminal	1 SADH	2 SAPH	–	4 VCC	5 SV	–	–	8 SADC	–	10 BUC1	–	12 GND	13 IDC	14 M1	–	–	Probable Failure Mode
Normal Voltage	5.5 -7.2	5.5 -7.2	–	4.5 -5.5	12.0 -14.3	–	–	5.6 -7.3	–	11.5 -14.5	–	0	8.5 -13.6	11.2 -14.6	–	–	
Your Voltage Reading		–	–			–	–	–	–		–				–	–	
Failure Mode Voltage	3.7 -4.8	3.7 -4.8	–	4.5 -5.5	12.0 -14.3	–	–	3.7 -4.9	–	11.5 -14.5	–	0	2.0 -8.5	11.2 -14.6	–	–	A Open in one cowl sensor contact
	0	0	–	4.5 -5.5	12.0 -14.3	–	–	0	–	11.5 -14.5	–	0	2.0 -8.5	11.2 -14.6	–	–	B • Open in both cowl sensor contacts. • Short in one dash sensor • Short to driver's or passenger's airbag inflator (body ground)
	11.2 -14.6	11.2 -14.6	–	4.5 -5.5	12.0 -14.3	–	–	11.2 -14.6	–	11.5 -14.5	–	0	2.0 -8.5	11.2 -14.6	–	–	C Short in cowl sensor or open in both dash sensors
	7.4 -9.6	7.4 -9.6	–	4.5 -5.5	12.0 -14.3	–	–	7.4 -9.7	–	11.5 -14.5	–	0	2.0 -8.5	11.2 -14.6	–	–	D Open in one dash sensor
	11.2 -14.6	3.7 -4.8	–	4.5 -5.5	12.0 -14.3	–	–	3.7 -4.9	–	11.5 -14.5	–	0	2.0 -8.5	11.2 -14.6	–	–	E Open in driver's airbag inflator or cable reel.
	3.7 -4.8	11.2 -14.6	–	4.5 -5.5	12.0 -14.3	–	–	3.7 -4.9	–	11.5 -14.5	–	0	2.0 -8.5	11.2 -14.6	–	–	F Open in front passenger's airbag inflator.
	11.2 -14.6	11.2 -14.6	–	4.5 -5.5	12.0 -14.3	–	–	0	–	11.5 -14.5	–	0	2.0 -8.5	11.2 -14.6	–	–	G Open in driver's and passenger's airbag inflator
	5.5 -7.2	5.5 -7.2	–	0	0	–	–	5.6 -7.3	–	11.2 -14.5	–	0	2.0 -8.5	11.2 -14.6	–	–	H Blown SRS fuse (No. 3) or open in the wire
	5.5 -7.2	5.5 -7.2	–	4.5 -5.5	12.0 -14.3	–	–	5.6 -7.3	–	11.5 -14.5	–	0	0 (8.5 -13.6)	11.2 -14.6	–	–	I Short (or open) in SRS indicator wire harness

(cont'd)

Mode A: Open in one cowl sensor contact.

- The SRS unit is faulty. Substitute a known-good SRS unit and recheck the voltages according to the chart on page 23-340.

Mode B:

- **Short to driver's or passenger's airbag inflator (body ground).**
- **Short in dash sensor.**
- **Open in both cowl sensor contacts.**

NOTE: The radio may have a 5-digit coded theft protection circuit. Be sure to get the customer's code number before disconnecting the battery cables.

1. Before disconnecting any part of the SRS wire harness, install the short connector(s) (RED) on the airbag(s) (see page 23-330).
2. Connect Test Harness B (07MAZ–SP00500) between the SRS unit and SRS main harness 18-P connector.

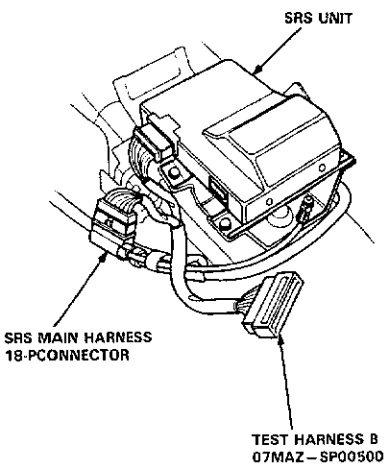

3. Reconnect the driver's airbag connector, then check continuity between the B1 terminal and body ground, and between the B7 terminal and body ground.

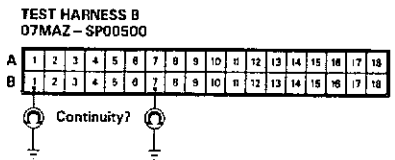

- If there is continuity at either terminal, go to step 6.
- If there is no continuity at either terminal;
  – Without front passenger's airbag, go to step 5.
  – With front passenger's airbag, go to step 4.

4. Reconnect the front passenger's airbag connector, then check continuity between the B2 terminal and body ground, and between the B8 terminal and body ground.

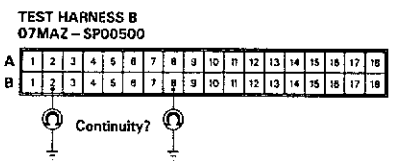

- If there is continuity at either terminal, go to step 10.
- If there is no continuity at either terminal, go to step 5.

5. Check continuity between body ground and each terminal of both dash sensors.

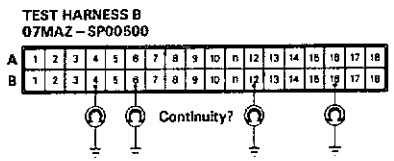

- If there is continuity at any of the terminals, go to step 12.
- If there is no continuity at any terminal, go to step 13.

6. Disconnect the cable reel 6-P connector from the SRS main harness, then connect Test Harness C (07LAZ–SL40300) only to the cable reel side of the 6-P connector.

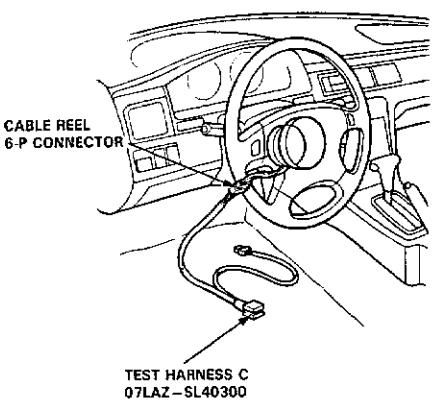

7. Check continuity between the No.4 terminal and body ground, and between the No.5 terminal and body ground.

- If there is continuity at either terminal, go to step 8.
- If there is no continuity at either terminal, the SRS main harness is faulty. Replace it and recheck the voltages according to the chart on page 23-340.

(cont'd)

Troubleshooting (cont'd)

8. Disconnect the driver's airbag 3-P connector from the cable reel, then connect Test Harness C (07LAZ–SL40300) to the driver's airbag 3-P connector.

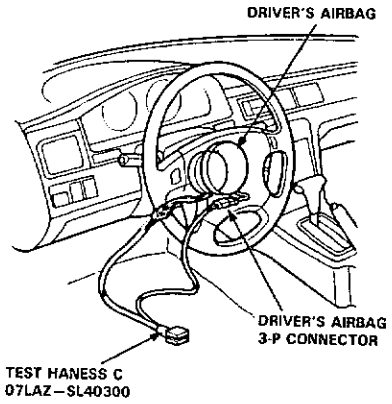

9. Check continuity between the No.7 terminal and body ground, and between the No.8 terminal and body ground.

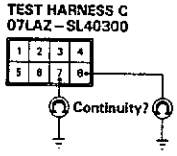

- If there is continuity at either terminal, the driver's airbag inflator is faulty. Replace it and recheck the voltages according to the chart on page 23-340.
- If there is no continuity at either terminal, the cable reel is faulty. Replace it and recheck the voltages according to the chart on page 23-340.

10. Disconnect the front passenger's airbag 3-P connector from the SRS main harness, then connect Test Harness C (07LAZ–SL40300) to the airbag side of the connector.

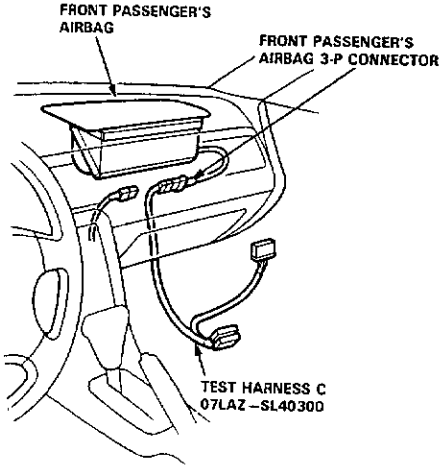

11. Check continuity between the No.7 terminal and body ground, and between the No.8 terminal and body ground.

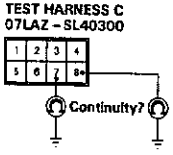

- If there is continuity at either terminal, the front passenger's airbag inflator is faulty. Replace it and recheck the voltages according to the chart on page 23-340.
- If there is no continuity at either terminal, the SRS main harness is faulty. Replace it and recheck the voltages according to the chart on page 23-340.

12. Connect Test Harness D (07LAZ–SL40400) between the dash sensor and SRS main harness 2-P connector. Check continuity between the No.1 terminal and body ground, and between the No.2 terminal and body ground.

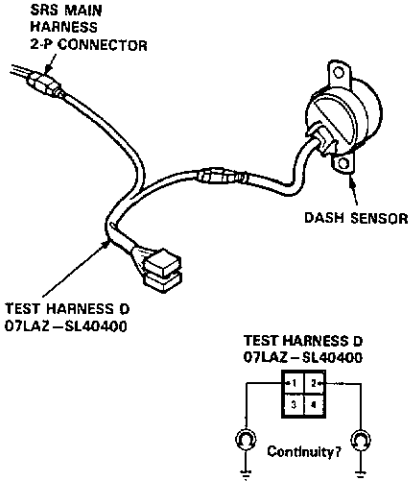

- If there is continuity at either terminal, the dash sensor is faulty. Replace it and recheck the chart on page 23-340.
- If there is no continuity at either terminal, the SRS main harness is faulty. Replace it and recheck the voltages according to the chart on page 23-340.

13. Check the resistance between the left dash sensor terminals B12 and B16, and between the right dash sensor terminals B4 and B6.

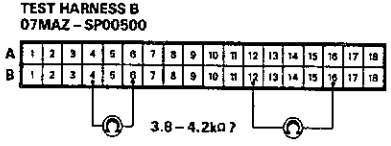

- If resistance is 3.8–4.2 kΩ for both sensors, the SRS unit is faulty. Substitute a know-good SRS unit and recheck the voltages according to the chart on page 23-340.
- If resistance is less than 3.8 kΩ for either sensor, go to step 14.

14. Connect Test Harness D (07LAZ–SL40400) between the dash sensor and SRS main harness 2-P connector. Check the resistance between the No.1 terminal and No.2 terminal.

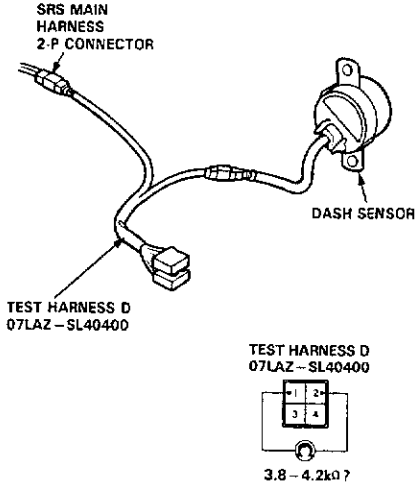

- If resistance is 3.8–4.2 kΩ, the SRS main harness is faulty. Replace it and recheck the voltages according to the chart on page 23-340.
- If resistance is less than 3.8 kΩ, the dash sensor is faulty. Replace it and recheck the voltages according to the chart on page 23-340.

(cont'd)

Troubleshooting (cont'd)

Mode C: Short in cowl sensor, or open in both dash sensors.
Mode D: Open in one dash sensor.

NOTE: The radio may have a 5-digit coded theft protection circuit. Be sure to get the customer's code number before disconnecting the battery cables.

1. Disconnect the battery negative cable and then the positive cable. Install the short connector(s) on the airbag(s) (see page 23-330).
2. Connect Test Harness B (07MAZ–SP00500) between the SRS unit and SRS main harness 18-P connector.

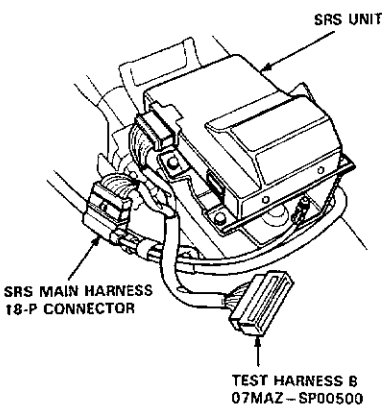

3. Check the resistance between the left dash sensor terminals B12 and B16, and between the right dash sensor terminals B4 and B6.

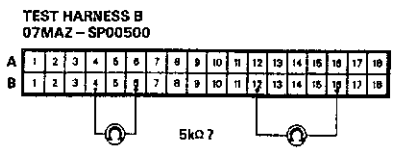

- If resistance is more than 5 kΩ for either sets of terminals, go to step 4.
- If resistance is less than 5 kΩ for both sets of terminal, the SRS unit is faulty. Substitute a known-good SRS unit and recheck the voltages according to the chart on page 23-340.

3. Connect Test Harness D (07LAZ–SL40400) between the dash sensor and SRS main harness 2-P connector.
   Check the resistance between the No. 1 terminal and No. 2 terminal.

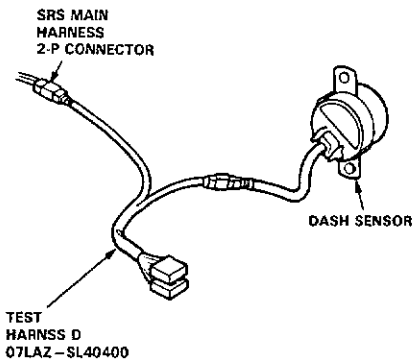

- If resistance is more than 5 kΩ, the dash sensor is faulty. Replace it and recheck the voltages according to the chart on page 23-340.
- If resistance is less than 5 kΩ, the SRS main harness is faulty. Replace the SRS main harness and recheck the voltages according to the chart on page 23-340.

Mode E: Open in driver's airbag inflator or cable reel.

NOTE: The radio may have a 5-digit coded theft protection circuit. Be sure to get the customer's code number before disconnecting the battery cables.

1. Before disconnecting any part of the SRS wire harness, install the short connector(s) (RED) on the airbag(s) (see page 23-330).
2. Connect Test Harness B (07MAZ–SP00500) between the SRS unit and SRS main harness 18-P connector.

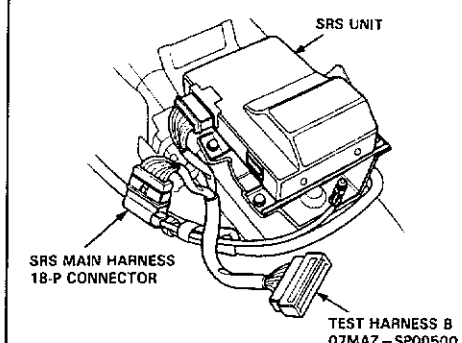

3. Reconnect the driver's airbag connector, check the resistance between the B1 and the B7 terminals.

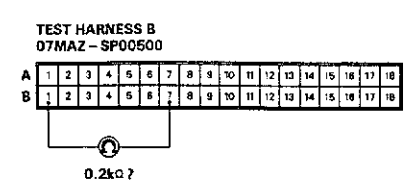

- If resistance is more than 0.2 kΩ, go to step 4.
- If resistance is less than 0.2 kΩ, the SRS unit is faulty. Substitute a known-good SRS unit and recheck the voltages according to the chart on page 23-340.

(cont'd)

4. Disconnect the cable reel 6-P connector from the SRS main harness, then connect Test Harness C (07LAZ–SL40300) only to the cable reel side of the connector.

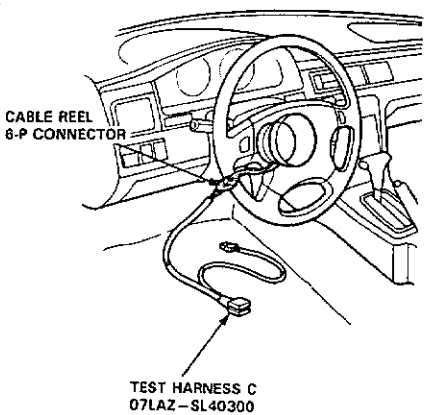

5. Measure the resistance between the No. 4 terminal and the No. 5 terminal.

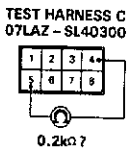

- If resistance is more than 0.2 kΩ, go to step 6.
- If resistance is less than 0.2 kΩ, the SRS main harness is faulty. Replace it and recheck the voltages according to the chart on page 23-340.

6. Disconnect the driver's airbag 3-P connector from the cable reel harness, then connect Test Harness C (07LAZ–SL40300) to the driver's airbag 3-P connector.

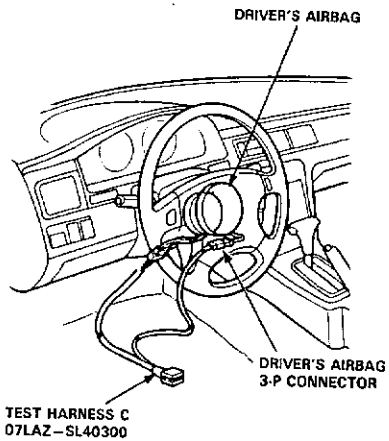

7. Measure the resistance between the No. 7 terminal and the No. 8 terminal.

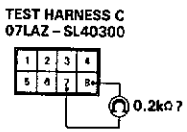

- If resistance is more than 0.2 kΩ, the driver's airbag inflator is faulty. Replace the airbag assembly and recheck the voltages according to the chart on page 23-340.
- If resistance is less than 0.2 kΩ, the cable reel is faulty. Replace it and recheck the voltages according to the chart on page 23-340.

Mode F: Open in front passenger's airbag inflator.

NOTE: The radio may have a 5-digit coded theft protection circuit. Be sure to get the customer's code number before disconnecting the battery cables.

1. Before disconnecting any part of the SRS wire harness, install the short connector(s) (RED) on the airbag(s) (see page 23-330).
2. Connect Test Harness B (07MAZ–SP00500) between the SRS unit and SRS main harness 18-P connector.

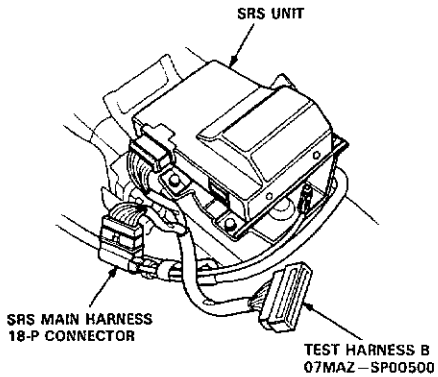

3. Reconnect the front passenger's airbag connector, then measure the resistance between the B2 terminal and B8 terminal.

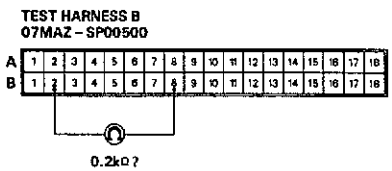

- If resistance is more than 0.2 kΩ, go to step 4.
- If resistance is less than 0.2 kΩ, the SRS unit is faulty. Substitute a known-good SRS unit and recheck the voltages according to the chart on page 23-340.

4. Disconnect the front passenger's airbag 3-P connector from the SRS main harness, then connect Test Harness C (07LAZ–SL40300) to the front passenger's airbag side of the connector.

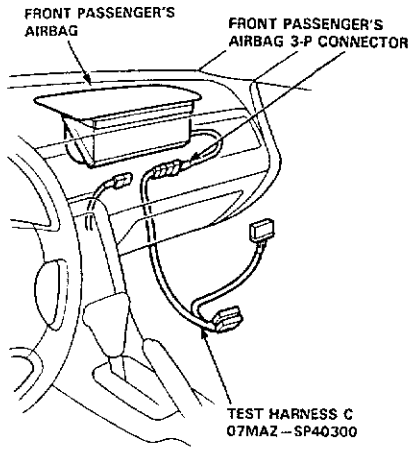

5. Measure the resistance between the No. 7 terminal and the No. 8 terminal.

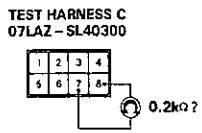

- If resistance is more than 0.2 kΩ, the front passenger's airbag inflator is faulty. Replace the front passenger's airbag assembly and recheck the voltages according to the chart on page 23-340.
- If resistance is less than 0.2 kΩ, the cable reel is faulty. Replace the cable reel and recheck the voltages according to the chart on page 23-340.

(cont'd)

Mode H: Blown SRS No. 3 fuse, or open in the wire.

NOTE: The radio may have a 5-digit coded theft protection circuit. Be sure to get the customer's code number before disconnecting the battery cables.

1. Check the SRS No. 3 (10 A) fuse in the under-dash fuse/relay box. If it's OK, go on to step 2.
   If it's blown, replace it with a new 10 A fuse, then turn the ignition switch ON:
   - If fuse doesn't blow, go on to step 2.
   - If the fuse blows, troubleshoot as necessary to find the short.
2. Before disconnecting any part of the SRS wire harness, install the short connector(s) (RED) on the airbag(s) (see page 23-330).
3. Connect Test Harness B (07MAZ-SP00500) between the SRS unit and SRS main harness 18-P connector.

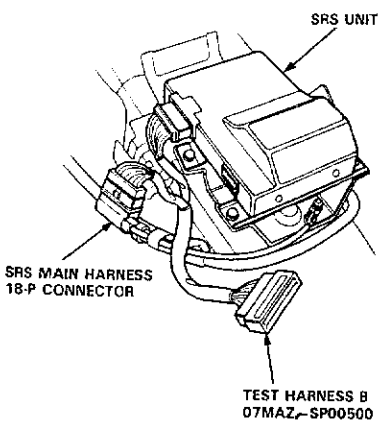

4. Reconnect the positive and negative cables to the battery.
5. Measure the voltage between the B13 terminal and body ground with the ignition switch ON.

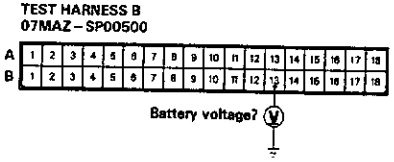

- If there is battery voltage, the SRS unit is faulty. Replace it and recheck the voltages according to the chart on page 23-340.
- If less than battery voltage, the SRS main harness is faulty. Replace it and recheck the voltages according to the chart on page 23-340.

Mode I: Short or open in SRS indicator wire harness.

NOTE: The radio may have a 5-digit coded theft protection circuit. Be sure to get the customer's code number before disconnecting the battery cables.

1. Disconnect the SRS main harness 4-P connector from the main wire harness.

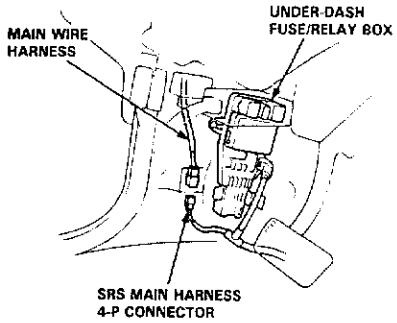

2. Turn the ignition switch ON and wait for six seconds. Measure the voltage between the No. 1 terminal and body ground on the SRS main harness 4-P connector side.

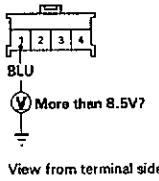

- If voltage is more than 8.5 V, go to step 8.
- If voltage is less than 8.5 V, go to step 3.

3. Before disconnecting any part of the SRS wire harness, install the short connector(s) (RED) on the airbag(s) (see page 23-330).
4. Connect Test Harness B (07MAZ-SP00500) between the SRS unit and SRS main harness 18-P connector

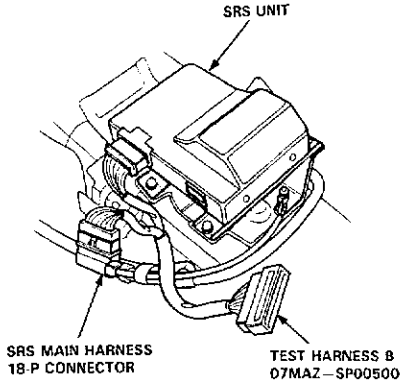

5. Reconnect the battery positive cable and negative cable.
6. Check for continuity between the B11 terminal and body ground.

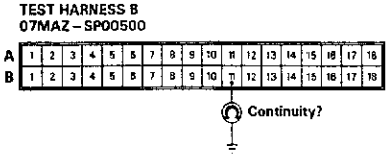

- If there is continuity, the SRS main harness is shorted. Replace the SRS main harness and recheck the voltages according to the chart on page 23-340.
- If there is no continuity, go to step 7.

(cont'd)

Troubleshooting (cont'd)

7. Check for continuity between the B11 terminal of Test Harness B (07MAZ-SP00500) and the No. 1 terminal of the SRS main harness 4-P connector.

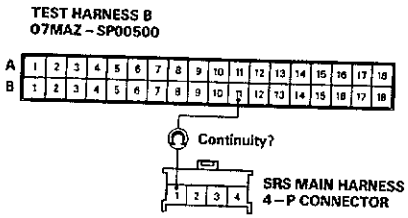

- If there is continuity, the SRS unit is faulty. Replace it and recheck the voltages according to the chart on page 23-340.
- If there is no continuity, there is an open in the SRS main harness. Replace the SRS main harness and recheck the voltages according to the chart on page 23-340.

8. Reconnect the SRS main harness 4-P connector to the main wire harness. Disconnect the dashboard wire harness 16-P connector from the gauge assembly.

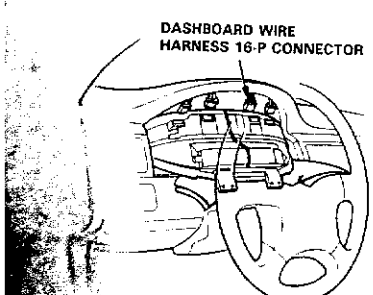

9. Turn the ignition switch ON and wait for six seconds. Measure the voltage between the No. 12 terminal and body ground.

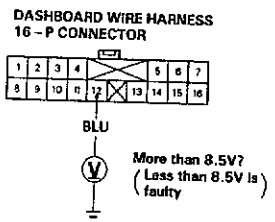

View from terminal side.

- If voltage is more than 8.5 V, the SRS indicator circuit is faulty (in the gauge assembly). Replace the SRS indicator assembly and recheck the voltages according to the chart on page 23-340.
- If voltage is less than 8.5 V, the dashboard wire harness (or the main wire harness) is faulty. Replace it and recheck the voltages according to the chart on page 23-340.

Poor ground at SRS unit or unit mounting bolts.

NOTE: The radio may have a 5-digit coded theft protection circuit. Be sure to get the customer's code number before disconnecting the battery cables.

1. Before disconnecting any part of the SRS wire harness, install the short connector(s) (RED) on the airbag(s) (see page 23-330).
2. Connect Test Harness B (07MAZ-SP00500) between the SRS unit and SRS main harness 18-P connector.

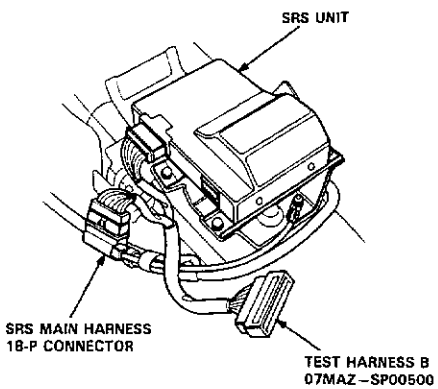

3. Check for continuity between the B5 terminal and body ground, and the B15 terminal and body ground.

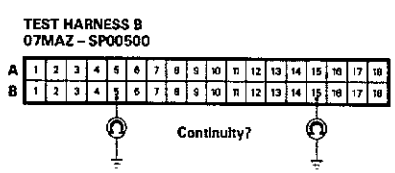

- If there is continuity at either terminal, the SRS unit is faulty. Replace it and recheck the voltages according to the chart on page 23-340.
- If there is no continuity at either terminal, the SRS unit ground, the SRS unit component grounds, or the SRS main harness is faulty. Check the grounds (check the SRS unit ground wire and mounting bolts) and, if necessary, replace the SRS main harness. Recheck the voltages according to the chart on page 23-340.

Supplemental Restraint System (SRS)

Airbag Assembly Replacement

WARNING **Store a removed airbag assembly with the pad surface up. If the airbag is improperly stored face down, accidental deployment could propel the unit with enough force to cause serious injury.**

CAUTION:

- **Do not install used SRS parts from another car. When repairing as SRS, use only new parts.**
- **Carefully inspect the airbag assembly before install it. Do not install an airbag assembly that shows signs of being dropped or improperly handled, such as dents, cracks or deformation.**
- **Always keep the short connector(s) (RED) on the airbag(s) when the harness is disconnected.**
- **Do not disassemble or tamper with the airbag assembly.**

NOTE: The radio may have a 5-digit coded theft protection circuit. Be sure to get the customer's code number before disconnecting the battery cables.

1. Disconnect the battery negative cable, then disconnect the positive cable.

2. Install the short connector(s) (RED) on the airbag side of the connector(s):

   Driver's Side:

   - Remove the glove box.
   - Disconnect the 3-P connector between the driver's airbag and cable reel, then install the short connector (RED) on the airbag side of the connector.

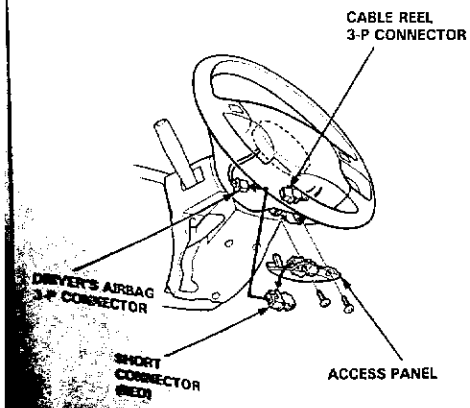

Front Passenger's Side:

- Remove the glove box.
- Disconnect the 3-P connector between the front passenger's airbag and SRS main harness, then install the short connector (RED) on the airbag side of the connector.

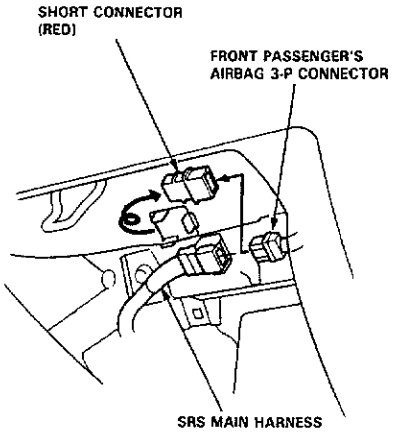

3. Remove the airbag(s).

   Driver's Side:

   - Remove the two TORX® bolts using a TORX® T30 bit, then remove the driver's airbag assembly.

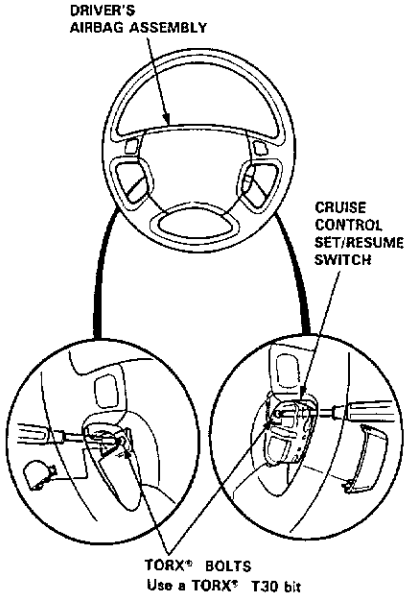

Front Passenger's Side:

- Remove the glove box, then remove the four mounting nuts from the bracket.
- Remove the bracket and one mounting nut from the front passenger's airbag assembly.

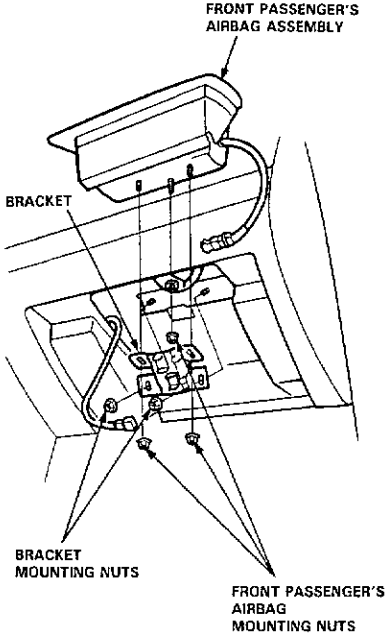

- Carefully lift the front passenger's airbag assembly out of the dashboard.

(cont'd)

CAUTION: Be sure to install the SRS wiring so that it is not pinched or interfering with other car parts.

4. Install the new airbag(s).

   Driver's Side: Place the driver's airbag assembly in the steering wheel, and secure it with new TORX® bolts.

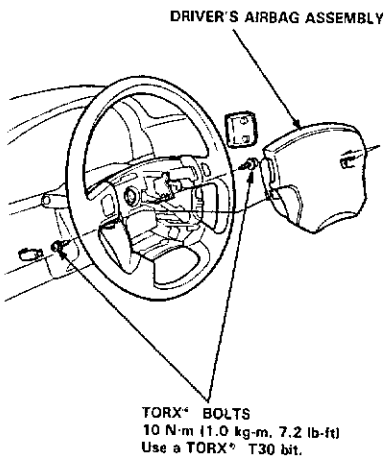

Front Passenger's Side:

- Place the front passenger's airbag assembly in the dashboard.
- Press the airbag assembly downwards and turn the adjusting nuts until they touch the lower part of the airbag assembly.
- Tighten the middle airbag mounting nut, then install the bracket and four mounting nuts.
- Tighten the two outer airbag mounting nuts, then tighten the two bracket mounting nuts.

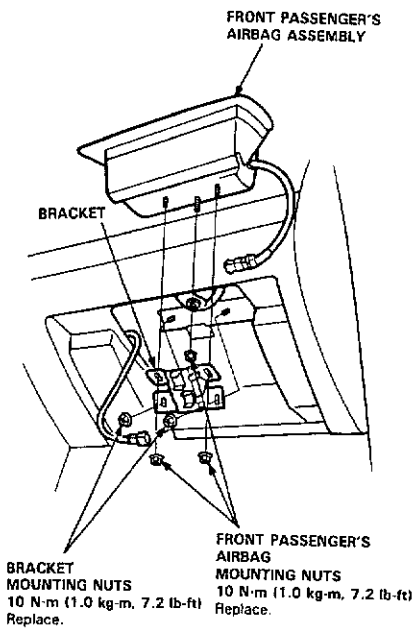

5. Remove and properly store the short connector(s), then reconnect the airbag connector(s).

   Front passenger's Side:

   - Attach the short connector (RED) to the connector holder, then reinstall the glove box.

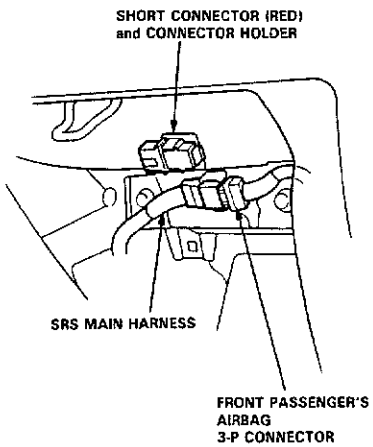

Driver's Side:

- Remove the short connector (RED) from the driver's airbag connector, then connect the airbag 3-P connector to the cable reel 3-P connector.
- Attach the short connector (RED) to the access panel, then reinstall the panel on the steering wheel.

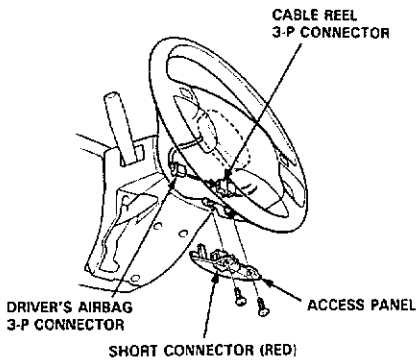

6. Connect the battery positive cable, then the negative cable.

7. After installing the airbag assembly, confirm proper system operation:

   - Turn the ignition ON (II): The instrument panel SRS indicator light should go on for about six seconds and then go off.
   - Make sure both horn buttons work.
   - Take a test drive and make sure the cruise control set/resume switch works.

8. Enter the code number to restore radio operation (see page 23-223).

Supplemental Restraint System (SRS)

– Airbag Assembly Disposal

Before scrapping any airbag(s) (including one in a whole car to be scrapped) the airbag must be deployed. If the car is still within the warranty period, before you deploy the airbag, the Acura District Service Manager must give approval and/or special instructions.
Only after an airbag has been deployed (as the result of vehicle collision, for example) it can be scrapped.
If the airbag(s) appears intact (not deployed) treat it with extreme caution.
Follow this procedure:

Deploying the Airbag(s): In-Car

NOTE: If an SRS car is to be entirely scrapped, its airbag(s) should be deployed while still in the car.
The airbag(s) should not be considered as salvageable part and should never be installed in another car.

WARNING Confirm that the airbag assembly is securely mounted; otherwise severe personal injury could result during deployment.

1. Disconnect both the negative cable and positive cable from the battery.

2. Confirm that the special tool is functioning properly by following the check procedure on the label of the tool set box, or on page 23-359

Driver's Airbag:

3. Remove the access panel, then disconnect the 3-P connector between the driver's airbag and cable reel.

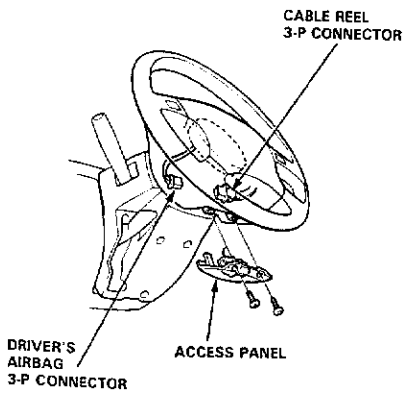

Front Passenger's Airbag:

4. Remove the glove box, then disconnect the 3-P connector between the front passenger's airbag and SRS main harness.

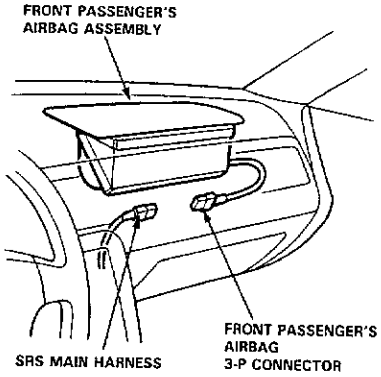

5. Cut off the airbag connector, strip the ends of the airbag, wires, and connect the special tool alligator clips to the bare wires. Place the special tool approximately thirty feet (10 m) away from the airbag.

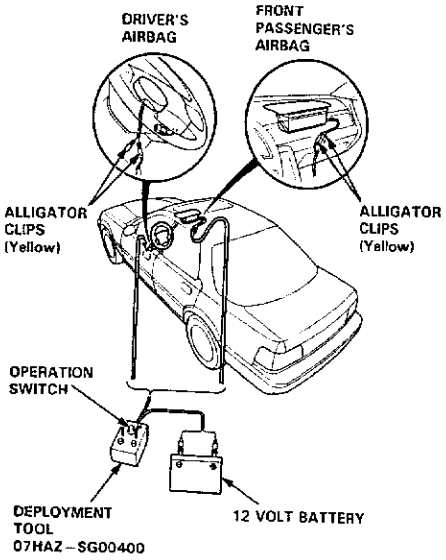

6. Connect a 12 volt battery to the tool:
   - If the green light on the tool goes on, the airbag igniter circuit is defective and cannot deploy the bag. Go to Damaged Airbag Special Procedure.
   - If the red light on the tool goes on, the airbag is ready to be deployed.

7. Push the tool's deployment switch. The airbag should deploy (deployment is both highly audible and visible—a loud noise and rapid inflation of the bag, followed by slow deflation).

   - If audible/visible deployment happens and the green light on the tool goes on, continue with this procedure.
   - If the airbag doesn't deploy, yet the green light goes ON, its igniter is defective.
     Go to Damaged Airbag Special Procedure.

WARNING During deployment, the airbag assembly can become hot enough to burn you.
Wait thirty minutes after deployment before touching the assembly.

8. Dispose of the complete airbag assembly. No part of it can be reused. Place it in a sturdy plastic bag and seal it securely.

CAUTION:
- **Wear a face shield and gloves when handling a deployed airbag.**
- **Wash your hands and rinse them well with water after handling a deployed airbag.**

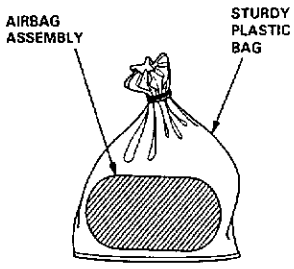

Deploying the Airbag: Out-of-car.

NOTE: If an intact airbag assembly has been removed from a scrapped car or has been found defective or damaged during transit, storage, or service, it should be deployed as follows:

WARNING Position the airbag assembly face up, outdoors on flat ground at least thirty feet (10 m) from any obstacles or people.

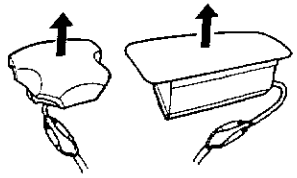

1. Confirm that the special tool is functioning properly by following the check procedure on this page or on the tool box label.
2. Remove the short connector from the airbag connector.
3. Follow steps 5, 6, 7 and 8 of the in-car deployment procedure.

Damaged Airbag Special Procedure.

WARNING If an airbag cannot be deployed, it should not be treated as normal scrap; it should still be considered a potentially explosive device that can cause serious injury.

1. If installed in a car, follow the removal procedure on page 23-354.

2. In all cases, make sure a short connector is properly installed on the airbag connector.

3. Package the airbag in exactly the same packaging that the new replacement part came in.

4. Mark the outside of the box "DAMAGED AIRBAG NOT DEPLOYED" so it does not get confused with your parts stock.

5. Contact your Acura District Service Manager for how and where to return it for disposal.

Deployment Tool: Check Procedure.

1. Connect the yellow clips to both switch protector handles on the tool; connect the tool to a battery.

2. Push the operation switch: green means tool is OK; red means tool is faulty.

3. Disconnect the battery and the yellow clips.

Cable Reel Replacement

WARNING Store a removed airbag assembly with the pad surface up. If the airbag is improperly stored face down, accidental deployment could propel the unit with enough force to cause serious injury.

CAUTION:
- Carefully inspect the airbag assembly before installing it. Do not install an airbag assembly that shows signs of being dropped or improperly handled, such as dents, cracks or deformation.
- Always keep the short connector(s) on the airbag(s) when the harness is disconnected.
- Do not disassemble or tamper with any airbag assembly.

NOTE: The radio may have a 5-digit coded theft protection circuit. Be sure to get the customer's code number before disconnecting the battery cable.

1. Disconnect the battery negative cable and then the positive cable.
2. Make sure the wheels are facing straight ahead.
3. Remove the dashboard lower cover and knee bolster.

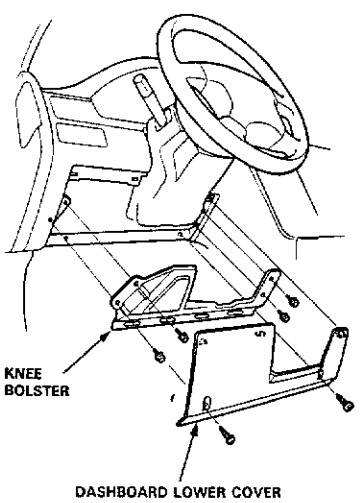

4. Install the short connector(s) on the airbag(s).

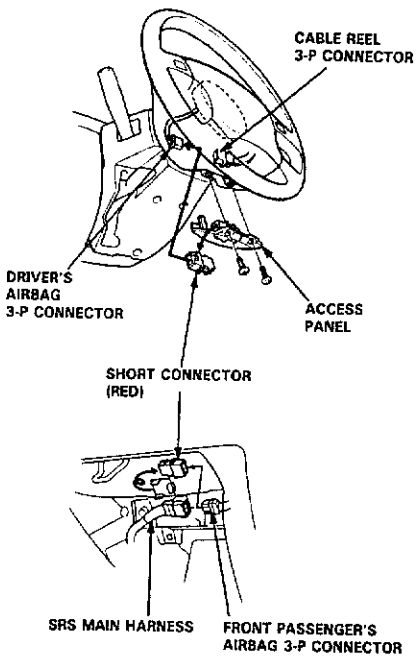

5. Remove the driver's airbag assembly from the steering wheel (two T30 TORX® bolts), then remove the steering wheel nut.

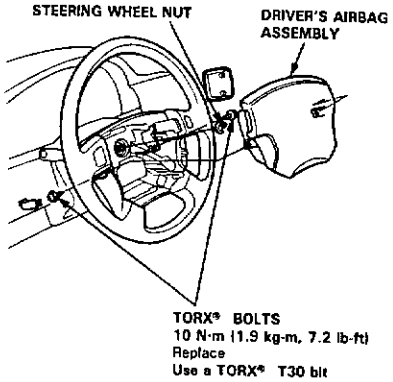

6. Disconnect the connectors from the horn and cruise control set/resume switch connectors, then remove the cable reel 3-P connector from its clip.

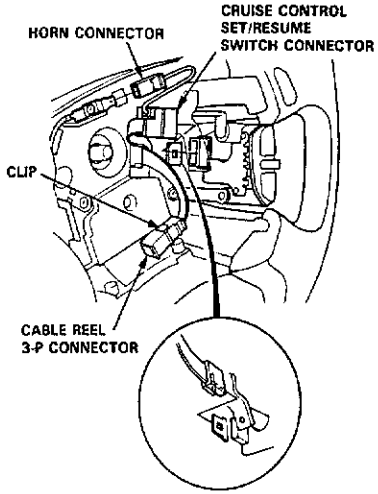

7. Remove the steering wheel from the column.
8. Remove the upper and lower column covers.

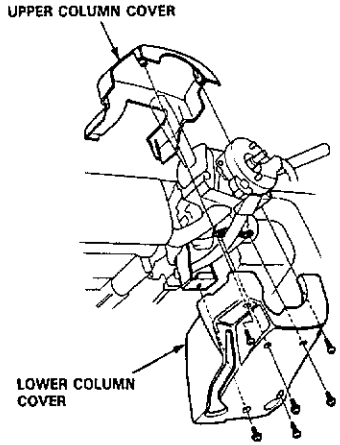

9. Disconnect the 6-P connector between the cable reel and SRS main harness, then remove the connector holder from the steering column.

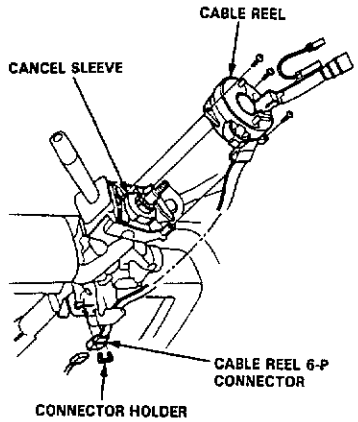

10. Remove the cable reel from the column.

(cont'd

Cable Reel Replacement (cont'd)

CAUTION:
- **Before installing the steering wheel, the front wheels should be aligned straight ahead.**
- **Be sure to install the harness wires so that they are not pinched or interfering with other car parts.**
- **After reassembly, confirm that the wheels are still straight ahead and that the steering wheel spoke angle is correct (road test). If minor spoke angle adjustment is necessary, do so only by adjusting the tie-rods, not by removing and repositioning the steering wheel.**

11. Align the cancel sleeve grooves with the cable reel projections.

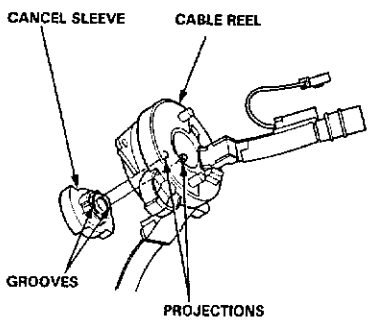

12. Carefully install the cable reel on the steering column shaft. Then attach the 6-P connector holder to the steering column.

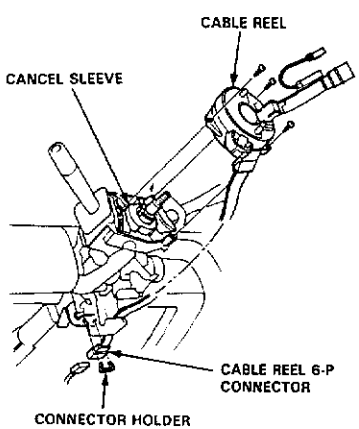

13. Install the steering column upper and lower covers.

14. Center the cable reel. Do this by first rotating the cable reel clockwise until it stops. Then rotate it counterclockwise (approximately two turns) until:
    - The yellow gear tooth lines up with the alignment mark on the cover.
    - The arrow mark on the cable reel label points straight up.

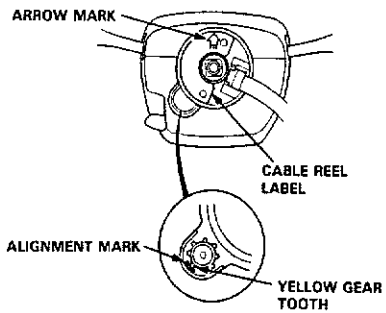

15. Install the steering wheel and attach the cable reel 3-P connector to the clip.

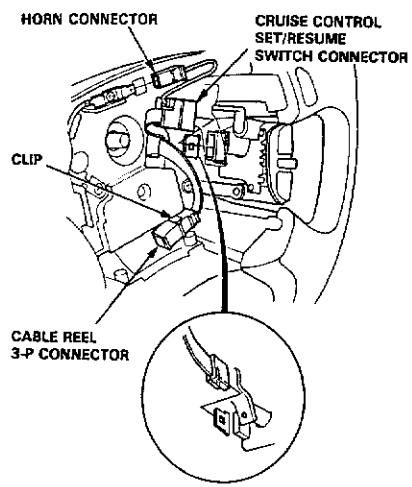

16. Connect the horn connector and cruise control set/resume switch connector.

17. Install the steering wheel nut.

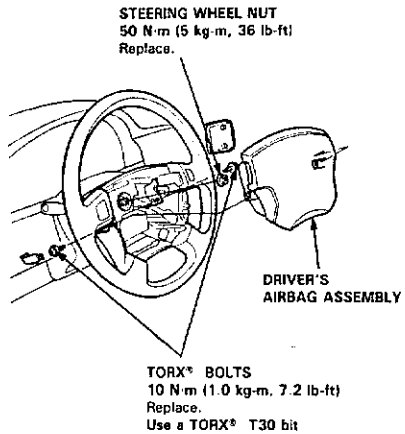

18. Install the driver's airbag assembly.

19. Connect the cable reel 6-P connector to the SRS main harness, then install the knee bolster, and dashboard lower cover.

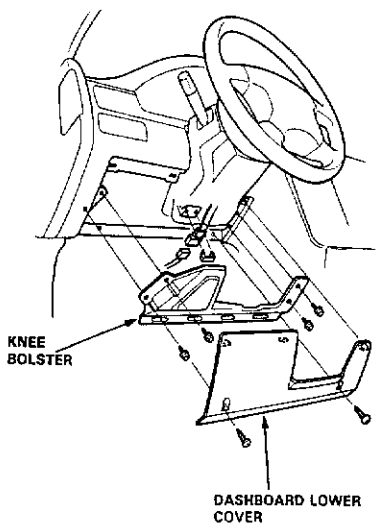

20. Remove and properly store the short connector(s) (RED), then reconnect the airbag connector(s) (and reinstall the access panel).

21. Reconnect the battery positive cable, then the negative cable.

22. After installing the cable reel, confirm proper system operation:
    - Turn the ignition ON (II); the instrument panel SRS indicator light should go on for about six seconds and then go off.
    - Make sure both horn buttons work.
    - Make sure the headlight and wiper switches work.
    - Go for a test drive and make sure the cruise control set/resume switch work.
    - Rotate the steering wheel counterclockwise to make sure the yellow gear tooth lines up with the alignment mark on the cover.

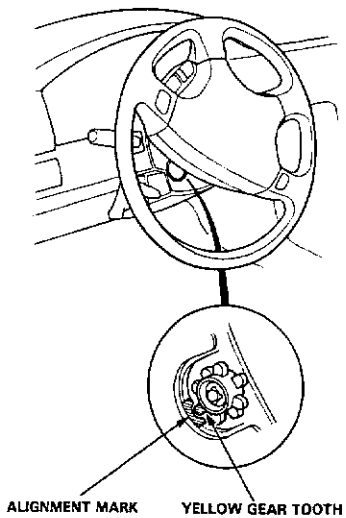

23. Enter the code number to restore radio operation (see page 23-223).

Dash Sensor Replacement

CAUTION:
- **Do not damage the sensor wiring.**
- **Do not install used SRS parts from another car. When repairing an SRS, use only new parts.**
- **Replace a sensor if it is dented, cracked, or deformed.**

NOTE: The radio may have a 5-digit coded theft protection circuit. Be sure to get the customer's code number before disconnecting the battery cable.

1. Disconnect the battery negative cable, then the positive cable.

2. Install the short connector(s) on the airbag(s).

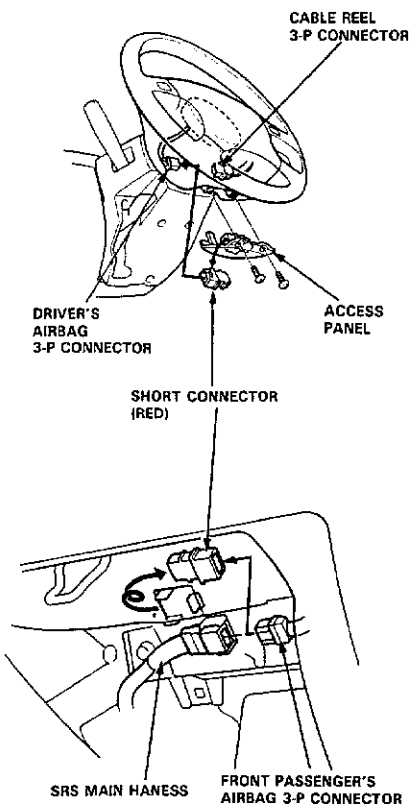

3. Left Dash Sensor:
   Remove the footrest and left door sill molding, then pull the carpet back, and remove the dash sensor protector.

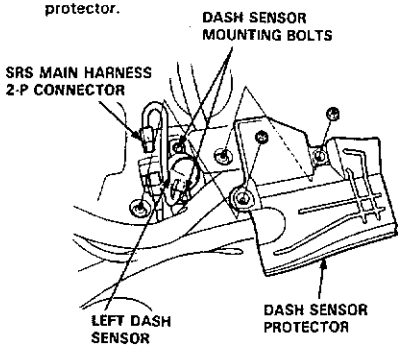

4. Right Dash Sensor:
   Remove the right door sill molding and pull back the carpet. Remove the ECM.

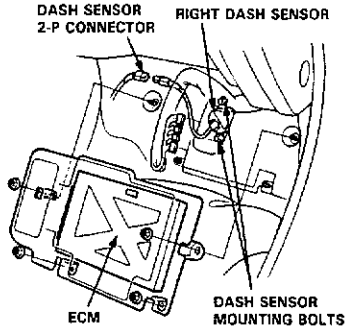

5. Remove the two mounting bolts, then remove the left or right dash sensor.

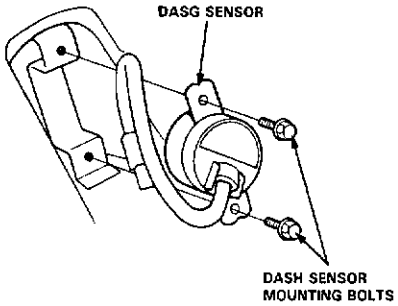

CAUTION:
- **Be sure to install the harness wires so they are not pinched or interfering with other car parts.**
- **Carefully inspect the new dash sensor(s) for signs of being dropped or improperly handled, such as dents, cracks or deformation.**
- **For the SRS to function properly, the right and left sensors must be installed on the proper sides.**

6. Install the sensor securely.

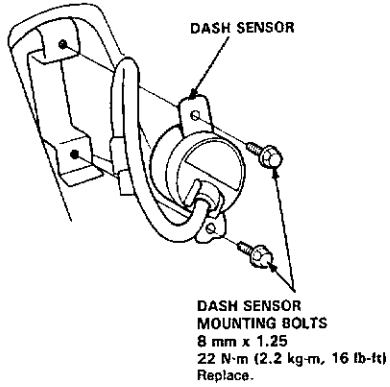

7. Reinstall all other removed parts.

8. Remove and properly store the short connector(s) (RED), then reconnect the airbag connector(s). Reinstall the access panel and glove box.

9. Reconnect the battery positive cable, then the negative cable.

10. After installing the dash sensor, confirm proper system operation: Turn the ignition ON (II); the instrument panel SRS indicator light should go on for about six seconds and then go off.

11. Enter the code number to restore radio operation (see page 23-223).

SRS Unit Replacement

CAUTION:
- **Before disconnecting any part of the SRS wire harness, install the short connector(s) (RED) on the airbag(s).**
- **Do not damage the SRS unit terminals or connectors.**
- **Do not disassemble the SRS unit; it has no serviceable parts.**
- **Store the SRS unit in a clean, dry area.**
- **Do not use any SRS unit which has been subjected to water damage or shows signs of being dropped or improperly handled, such as dents, cracks or deformation.**

NOTE: The radio may have a 5-digit coded theft protection circuit. Be sure to get the customer's code number before disconnecting the battery cable.

1. Disconnect the battery negative cable, then the positive cable.
2. Install the short connector(s) on the airbag(s) (see page 23-330).
3. Remove the center console.
4. Remove the heater control panel and radio panel assembly.

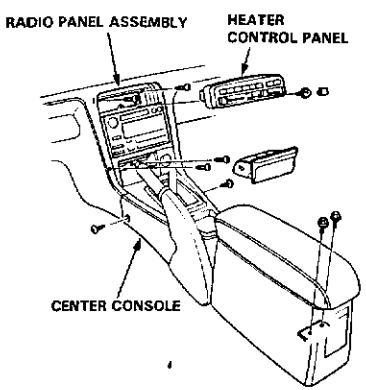

5. Disconnect the SRS main harness 18-P connector from the SRS unit.

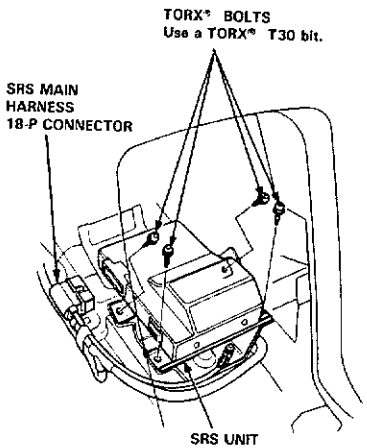

6. Remove the four SRS unit TORX® bolts, then pull the SRS unit out of the dashboard.

CAUTION: Be sure to install the SRS wiring so that it is not pinched or interfering with other car parts.

7. Install the new SRS unit.

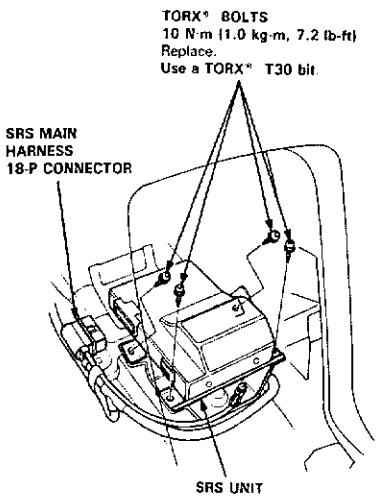

8. Connect the SRS main harness 18-P connector to the SRS unit; push it into position until it clicks.
9. Install the radio panel assembly and heater control panel, then install the center console.

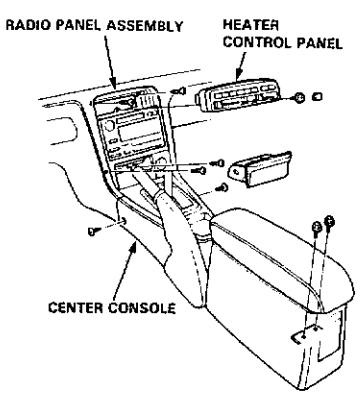

10. Remove and properly store the short connector(s), then reconnect the airbag connector(s). Reinstall the access panel and glove box.
11. Reconnect the battery positive cable, then the negative cable.
12. After installing the SRS unit, confirm proper system operation:
    - Turn the ignition ON (II); the instrument panel SRS light should go on for about six seconds and then go off.
    - Make sure the climate control system work.
    - Make sure the cigarette lighter work.
13. Enter the code number to restore radio operation (see page 23-223).

Wiring Diagrams

Index

ABS 14
Air Conditioning 17
Automatic Transmission System 15
Battery 1
Charging System 1
Cigarette Lighter 8
Clock 8
Cruise Control System 13
Fan control System 17
Fuel Injection System 16
Gauges 2
Heater Control System 17
Horns 8
Ignition Switch 1
Ignition System 1
Indicators
- A/T gear position indicator 3
- Safety Indicator 3

Integrated Control Unit 4
Interlock System 3
Key-in Reminder System 4
Lights-on Reminder System 4
Lights, Exterior
- Back-up Lights 8
- Brake Lights 9
- Front Side Marker Lights 4
- Daytime Running Lights (Canada) 6
- Hazard Warning Lights 9
- Headlights 5, 6
- License Plate Lights 7
- Taillights 7
- Turn Signal Lights 9

Lights, Interior
- Ashtray Light 8
- Ceiling Lights 8
- Courtesy Lights 8
- Dash Lights Brightness Control 7
- Glove Box Light 7
- Ignition Key Light 4
- Trunk Light 8
- Vanity Mirror Lights 7
- Lighting System 5, 6

Moonroof 11
Power Door Locks 11
Power Mirror 11
Power Seat 13
Power Window 12
Rear Window Defogger 9
Seat Heater (Canada) 14
Security Alarm System 18
Side Marker/Turn Signal/
- Hazard Flasher System 9

Starting System 1
Stereo Sound System 10
Supplemental Restraint System (SRS) 18
Windshield Washer 12
Windshield Wiper 12

NOTES

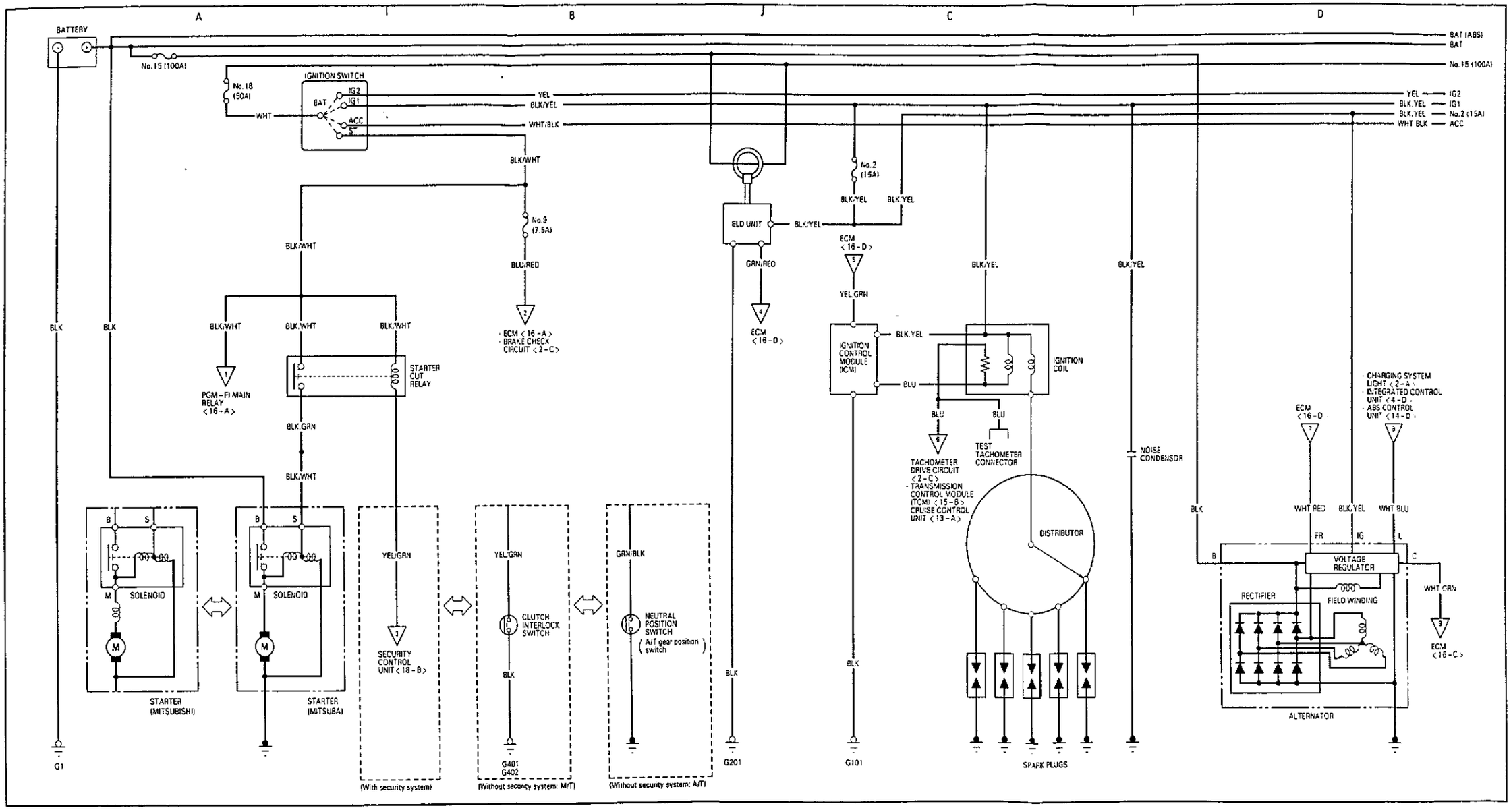
BATTERY
No. 15 (100A)
No. 18 (50A)
IGNITION SWITCH
BAT
IG2
IG1
ACC
ST
WHT
YEL
BLK/YEL
WHT/BLK
BAT (ABS)
BAT
No. 15 (100A)
YEL — IG2
BLK/YEL — IG1
BLK/YEL — No.2 (15A)
WHT BLK — ACC
BLK/WHT
No. 9 (7.5A)
BLU/RED
ECM <16-A>
BRAKE CHECK CIRCUIT <2-C>
BLK
BLK/WHT
PGM-FI MAIN RELAY <16-A>
STARTER CUT RELAY
BLK/GRN
SOLENOID
STARTER (MITSUBISHI)
STARTER (MITSUBA)
YEL/GRN
SECURITY CONTROL UNIT <18-B>
(With security system)
CLUTCH INTERLOCK SWITCH
G401
G402
(Without security system: M/T)
GRN/BLK
NEUTRAL POSITION SWITCH
(A/T gear position switch)
(Without security system: A/T)
G1
ELD UNIT
GRN/RED
ECM <16-D>
G201
No. 2 (15A)
BLK/YEL
YEL/GRN
IGNITION CONTROL MODULE (ICM)
BLU
G101
IGNITION COIL
TACHOMETER DRIVE CIRCUIT <2-C>
TRANSMISSION CONTROL MODULE (TCM) <15-B>
CRUISE CONTROL UNIT <13-A>
TEST TACHOMETER CONNECTOR
DISTRIBUTOR
SPARK PLUGS
NOISE CONDENSOR
CHARGING SYSTEM LIGHT <2-A>
INTEGRATED CONTROL UNIT <4-D>
ABS CONTROL UNIT <14-D>
WHT/RED
WHT/BLU
FR
IG
L
VOLTAGE REGULATOR
RECTIFIER
FIELD WINDING
WHT/GRN
ALTERNATOR

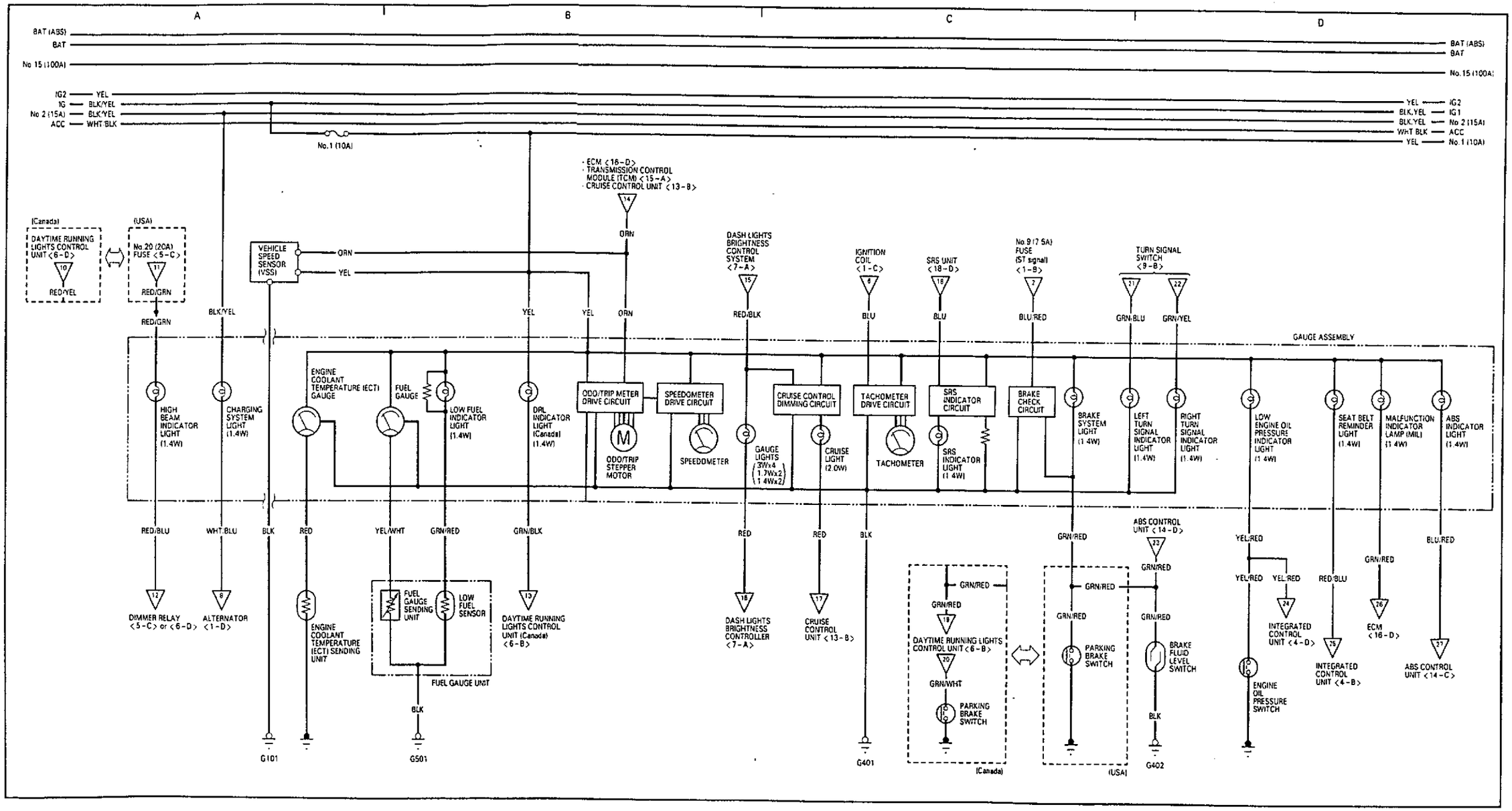
2
A
B
C
D
BAT (ABS)
BAT
No 15 (100A)
IG2
IG
No 2 (15A)
ACC
YEL
BLK/YEL
WHT/BLK
No.1 (10A)
(Canada)
(USA)
DAYTIME RUNNING LIGHTS CONTROL UNIT <6-D>
No.20 (20A) FUSE <5-C>
RED/YEL
RED/GRN
VEHICLE SPEED SENSOR (VSS)
ORN
· ECM <16-D>
· TRANSMISSION CONTROL MODULE (TCM) <15-A>
· CRUISE CONTROL UNIT <13-B>
DASH LIGHTS BRIGHTNESS CONTROL SYSTEM <7-A>
IGNITION COIL <1-C>
SRS UNIT <18-D>
No.9 (7.5A) FUSE (ST signal) <1-B>
TURN SIGNAL SWITCH <9-B>
RED/BLK
BLU
BLU/RED
GRN/BLU
GRN/YEL
GAUGE ASSEMBLY
HIGH BEAM INDICATOR LIGHT (1.4W)
CHARGING SYSTEM LIGHT (1.4W)
ENGINE COOLANT TEMPERATURE (ECT) GAUGE
FUEL GAUGE
LOW FUEL INDICATOR LIGHT (1.4W)
DRL INDICATOR LIGHT (Canada) (1.4W)
ODO/TRIP METER DRIVE CIRCUIT
SPEEDOMETER DRIVE CIRCUIT
CRUISE CONTROL DIMMING CIRCUIT
TACHOMETER DRIVE CIRCUIT
SRS INDICATOR CIRCUIT
BRAKE CHECK CIRCUIT
BRAKE SYSTEM LIGHT (1.4W)
LEFT TURN SIGNAL INDICATOR LIGHT (1.4W)
RIGHT TURN SIGNAL INDICATOR LIGHT (1.4W)
LOW ENGINE OIL PRESSURE INDICATOR LIGHT (1.4W)
SEAT BELT REMINDER LIGHT (1.4W)
MALFUNCTION INDICATOR LAMP (MIL) (1.4W)
ABS INDICATOR LIGHT (1.4W)
ODO/TRIP STEPPER MOTOR
SPEEDOMETER
GAUGE LIGHTS (3Wx4 1.7Wx2 1.4Wx2)
CRUISE LIGHT (2.0W)
TACHOMETER
SRS INDICATOR LIGHT (1.4W)
RED/BLU
WHT/BLU
BLK
RED
YEL/WHT
GRN/RED
GRN/BLK
YEL/RED
BLU/RED
ABS CONTROL UNIT <14-D>
DIMMER RELAY <5-C> or <6-D>
ALTERNATOR <1-D>
ENGINE COOLANT TEMPERATURE (ECT) SENDING UNIT
FUEL GAUGE SENDING UNIT
LOW FUEL SENSOR
FUEL GAUGE UNIT
DAYTIME RUNNING LIGHTS CONTROL UNIT (Canada) <6-B>
DASH LIGHTS BRIGHTNESS CONTROLLER <7-A>
CRUISE CONTROL UNIT <13-B>
DAYTIME RUNNING LIGHTS CONTROL UNIT <6-B>
GRN/WHT
PARKING BRAKE SWITCH
(Canada)
(USA)
BRAKE FLUID LEVEL SWITCH
ENGINE OIL PRESSURE SWITCH
INTEGRATED CONTROL UNIT <4-D>
INTEGRATED CONTROL UNIT <4-B>
ECM <16-D>
ABS CONTROL UNIT <14-C>
G101
G501
G401
G402

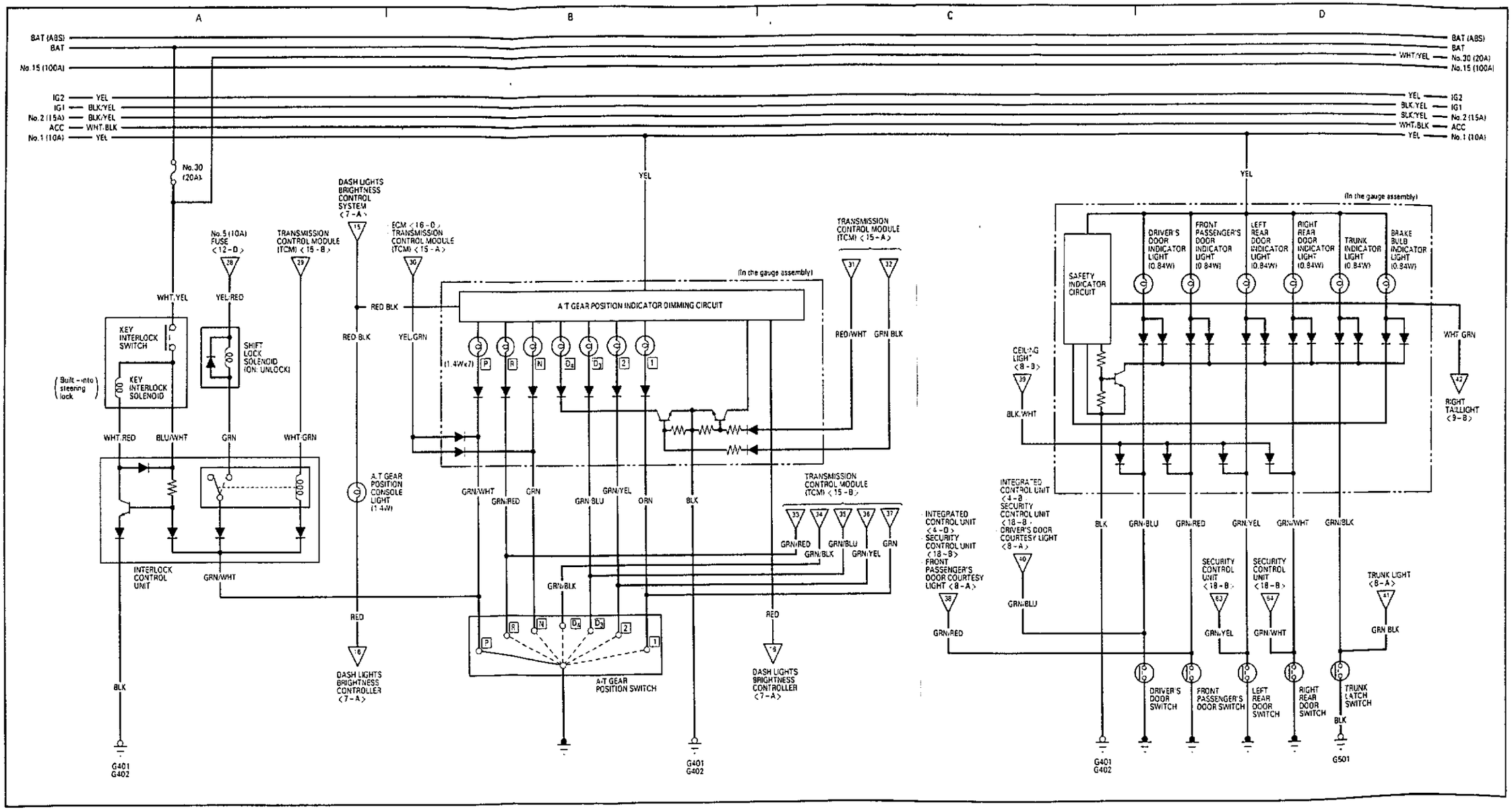
3
A
B
C
D
3
BAT (ABS)
BAT
No.15 (100A)
IG2
IG1
No.2 (15A)
ACC
No.1 (10A)
YEL
BLK/YEL
WHT/BLK
WHT/YEL
No.30 (20A)
No.30 (20A)
No.5 (10A) FUSE <12-D>
TRANSMISSION CONTROL MODULE (TCM) <15-B>
DASH LIGHTS BRIGHTNESS CONTROL SYSTEM <7-A>
ECM <16-D>, TRANSMISSION CONTROL MODULE (TCM) <15-A>
TRANSMISSION CONTROL MODULE (TCM) <15-A>
(In the gauge assembly)
A/T GEAR POSITION INDICATOR DIMMING CIRCUIT
KEY INTERLOCK SWITCH
KEY INTERLOCK SOLENOID
(Built-into steering lock)
SHIFT LOCK SOLENOID (ON: UNLOCK)
INTERLOCK CONTROL UNIT
A/T GEAR POSITION CONSOLE LIGHT (1.4W)
A/T GEAR POSITION SWITCH
DASH LIGHTS BRIGHTNESS CONTROLLER <7-A>
TRANSMISSION CONTROL MODULE (TCM) <15-B>
INTEGRATED CONTROL UNIT <4-D> SECURITY CONTROL UNIT <18-B> FRONT PASSENGER'S DOOR COURTESY LIGHT <8-A>
INTEGRATED CONTROL UNIT <4-B> SECURITY CONTROL UNIT <18-B> DRIVER'S DOOR COURTESY LIGHT <8-A>
CEILING LIGHT <8-B>
SAFETY INDICATOR CIRCUIT
DRIVER'S DOOR INDICATOR LIGHT (0.84W)
FRONT PASSENGER'S DOOR INDICATOR LIGHT (0.84W)
LEFT REAR DOOR INDICATOR LIGHT (0.84W)
RIGHT REAR DOOR INDICATOR LIGHT (0.84W)
TRUNK INDICATOR LIGHT (0.84W)
BRAKE BULB INDICATOR LIGHT (0.84W)
RIGHT TAILLIGHT <9-B>
SECURITY CONTROL UNIT <18-B>
TRUNK LIGHT <8-A>
DRIVER'S DOOR SWITCH
FRONT PASSENGER'S DOOR SWITCH
LEFT REAR DOOR SWITCH
RIGHT REAR DOOR SWITCH
TRUNK LATCH SWITCH
G401
G402
G501

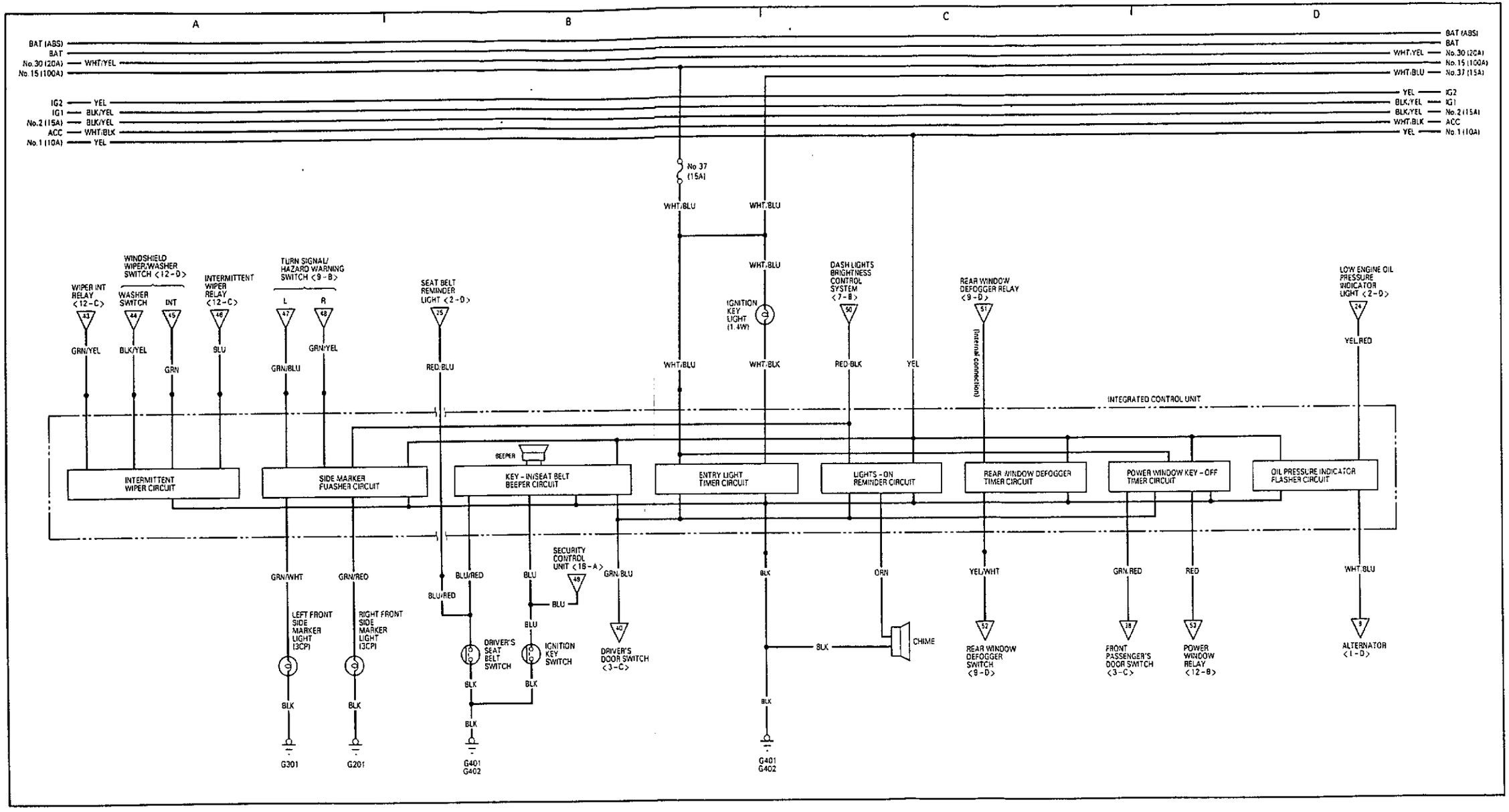
A
B
C
D
BAT (ABS)
BAT
No.30 (20A)
WHT/YEL
No.15 (100A)
IG2
YEL
IG1
BLK/YEL
No.2 (15A)
BLK/YEL
ACC
WHT/BLK
No.1 (10A)
YEL
WHT/YEL
WHT/BLU
No.37 (15A)
No 37 (15A)
WHT/BLU
WHT/BLU
WHT/BLU
WHT/BLU
WHT/BLK
RED/BLK
YEL
WIPER INT RELAY <12-C>
WINDSHIELD WIPER/WASHER SWITCH <12-D>
WASHER SWITCH
INT
INTERMITTENT WIPER RELAY <12-C>
TURN SIGNAL/ HAZARD WARNING SWITCH <9-B>
L
R
SEAT BELT REMINDER LIGHT <2-D>
IGNITION KEY LIGHT (1.4W)
DASH LIGHTS BRIGHTNESS CONTROL SYSTEM <7-B>
REAR WINDOW DEFOGGER RELAY <9-D>
(Internal connection)
LOW ENGINE OIL PRESSURE INDICATOR LIGHT <2-D>
YEL/RED
GRN/YEL
BLK/YEL
GRN
BLU
GRN/BLU
GRN/YEL
RED/BLU
INTEGRATED CONTROL UNIT
BEEPER
INTERMITTENT WIPER CIRCUIT
SIDE MARKER FLASHER CIRCUIT
KEY-IN/SEAT BELT BEEPER CIRCUIT
ENTRY LIGHT TIMER CIRCUIT
LIGHTS-ON REMINDER CIRCUIT
REAR WINDOW DEFOGGER TIMER CIRCUIT
POWER WINDOW KEY-OFF TIMER CIRCUIT
OIL PRESSURE INDICATOR FLASHER CIRCUIT
SECURITY CONTROL UNIT <1B-A>
GRN/WHT
GRN/RED
BLU/RED
BLU/RED
BLU
BLU
BLU
GRN/BLU
BLK
ORN
YEL/WHT
GRN/RED
RED
WHT/BLU
LEFT FRONT SIDE MARKER LIGHT (3CP)
RIGHT FRONT SIDE MARKER LIGHT (3CP)
DRIVER'S SEAT BELT SWITCH
IGNITION KEY SWITCH
DRIVER'S DOOR SWITCH <3-C>
CHIME
REAR WINDOW DEFOGGER SWITCH <9-D>
FRONT PASSENGER'S DOOR SWITCH <3-C>
POWER WINDOW RELAY <12-B>
ALTERNATOR <1-D>
BLK
BLK
BLK
BLK
BLK
BLK
BLK
G301
G201
G401
G402
G401
G402

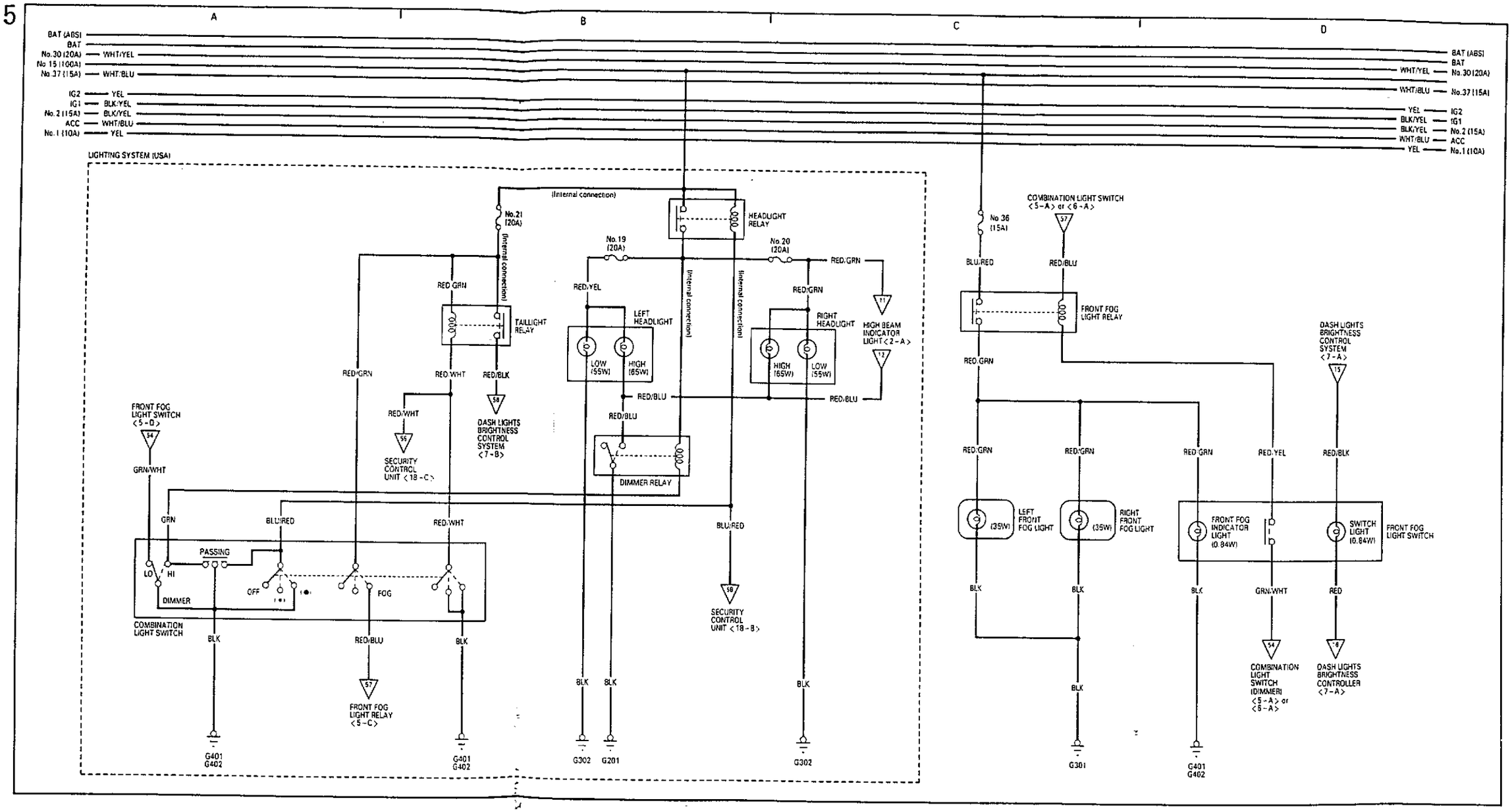
A
B
C
D
BAT (ABS)
BAT
No.30 (20A)
No.15 (100A)
No.37 (15A)
IG2
IG1
No.2 (15A)
ACC
No.1 (10A)
WHT/YEL
WHT/BLU
YEL
BLK/YEL
LIGHTING SYSTEM (USA)
(Internal connection)
No.21 (20A)
HEADLIGHT RELAY
No.19 (20A)
No.20 (20A)
RED/GRN
RED/YEL
TAILLIGHT RELAY
LEFT HEADLIGHT
RIGHT HEADLIGHT
LOW (55W)
HIGH (65W)
HIGH BEAM INDICATOR LIGHT <2-A>
RED/WHT
RED/BLK
RED/BLU
DASH LIGHTS BRIGHTNESS CONTROL SYSTEM <7-B>
SECURITY CONTROL UNIT <18-C>
DIMMER RELAY
FRONT FOG LIGHT SWITCH <5-D>
GRN/WHT
GRN
BLU/RED
PASSING
LO
HI
DIMMER
OFF
FOG
COMBINATION LIGHT SWITCH
BLK
FRONT FOG LIGHT RELAY <5-C>
SECURITY CONTROL UNIT <18-B>
G401
G402
G302
G201
No.36 (15A)
COMBINATION LIGHT SWITCH <5-A> or <6-A>
FRONT FOG LIGHT RELAY
DASH LIGHTS BRIGHTNESS CONTROL SYSTEM <7-A>
(35W)
LEFT FRONT FOG LIGHT
RIGHT FRONT FOG LIGHT
FRONT FOG INDICATOR LIGHT (0.84W)
SWITCH LIGHT (0.84W)
FRONT FOG LIGHT SWITCH
RED
COMBINATION LIGHT SWITCH (DIMMER) <5-A> or <6-A>
DASH LIGHTS BRIGHTNESS CONTROLLER <7-A>
G301

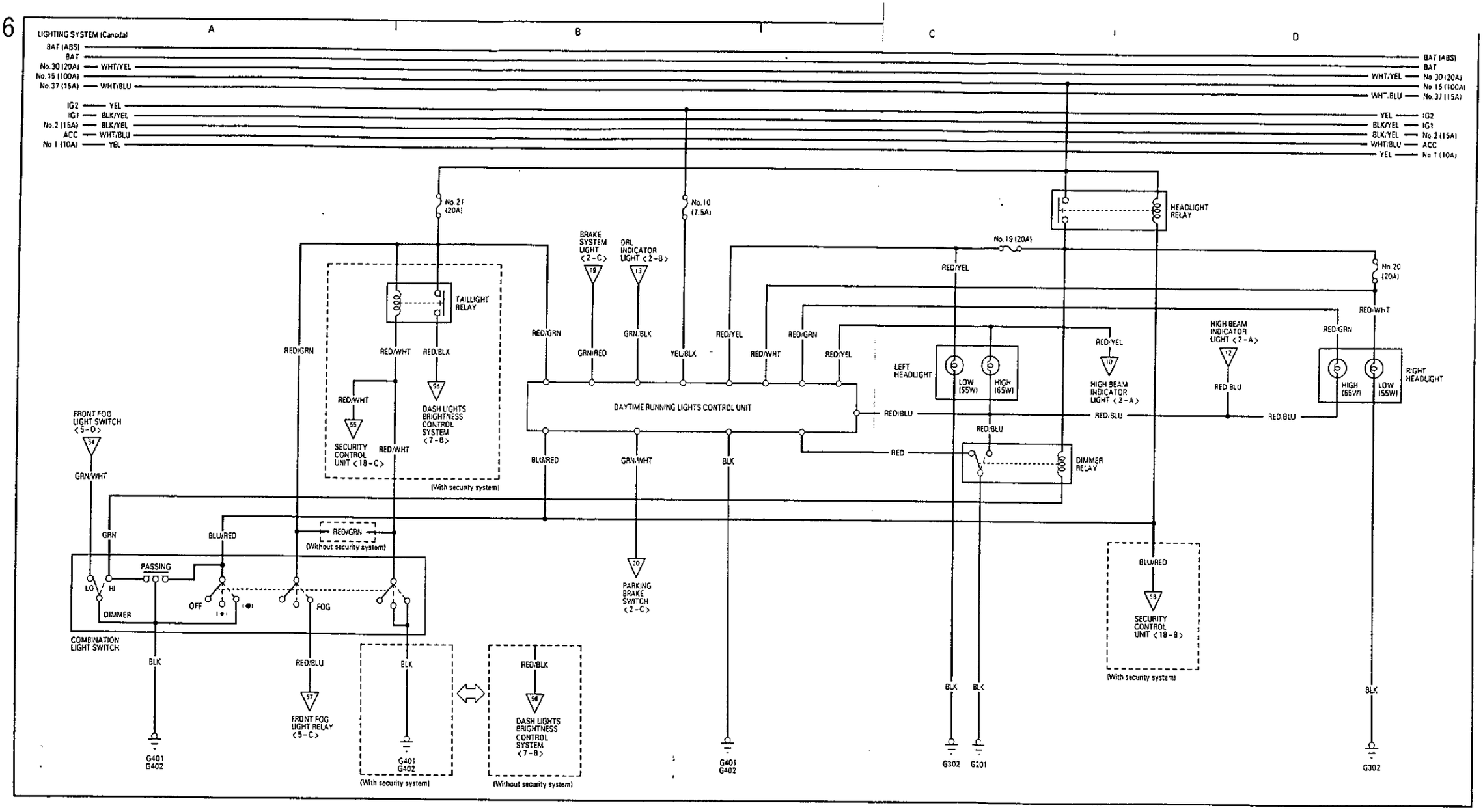
LIGHTING SYSTEM (Canada)
A
B
C
D
BAT (ABS)
BAT
No.30 (20A)
No.15 (100A)
No.37 (15A)
IG2
IG1
No.2 (15A)
ACC
No.1 (10A)
WHT/YEL
WHT/BLU
YEL
BLK/YEL
No.21 (20A)
No.10 (7.5A)
No.19 (20A)
No.20 (20A)
HEADLIGHT RELAY
TAILLIGHT RELAY
BRAKE SYSTEM LIGHT <2-C>
DRL INDICATOR LIGHT <2-B>
HIGH BEAM INDICATOR LIGHT <2-A>
LEFT HEADLIGHT
RIGHT HEADLIGHT
LOW (55W)
HIGH (65W)
DAYTIME RUNNING LIGHTS CONTROL UNIT
DIMMER RELAY
DASH LIGHTS BRIGHTNESS CONTROL SYSTEM <7-B>
SECURITY CONTROL UNIT <18-C>
SECURITY CONTROL UNIT <18-B>
(With security system)
FRONT FOG LIGHT SWITCH <5-D>
COMBINATION LIGHT SWITCH
PASSING
LO
HI
DIMMER
OFF
FOG
(Without security system)
PARKING BRAKE SWITCH <2-C>
FRONT FOG LIGHT RELAY <5-C>
G401
G402
G302
G201

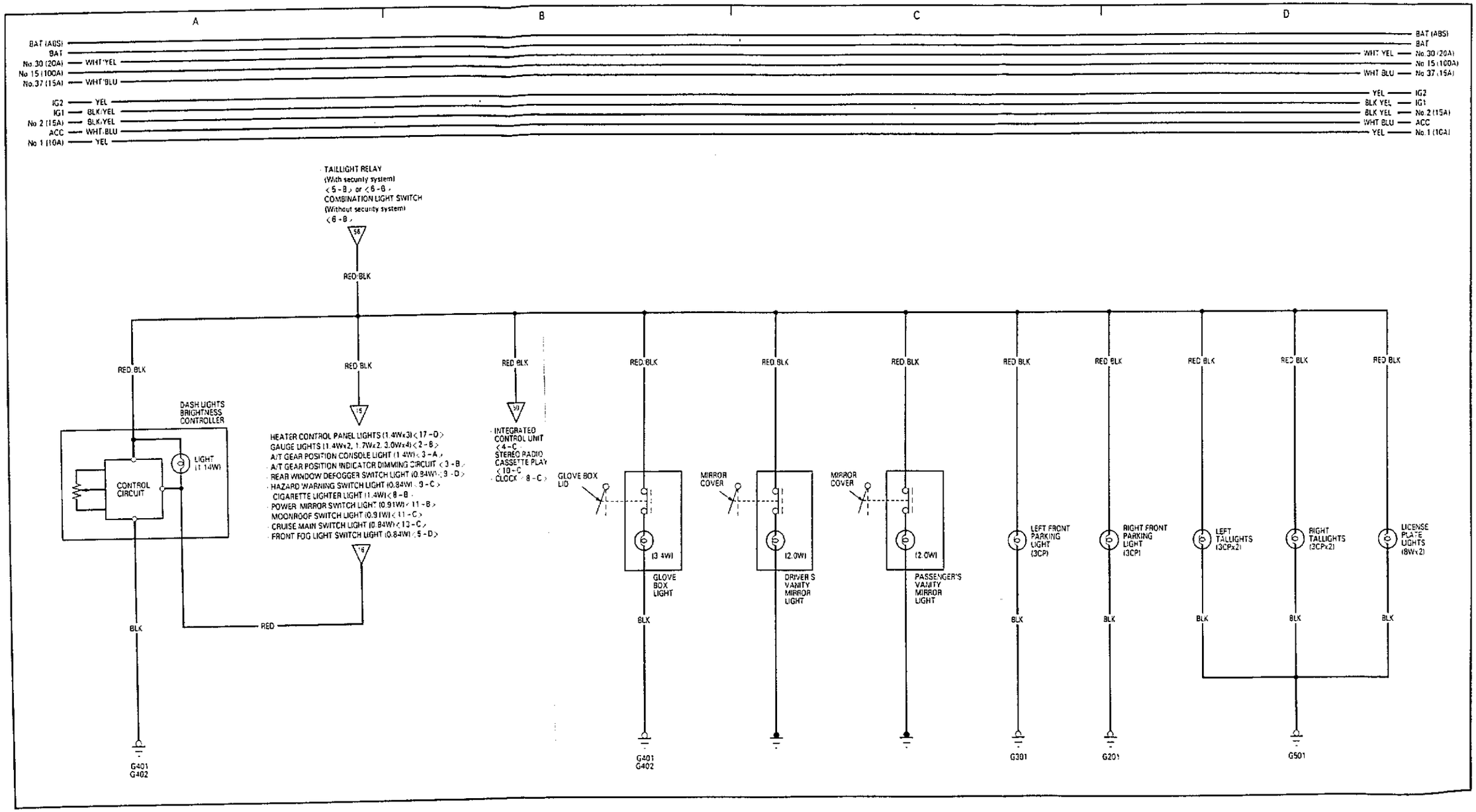
A
B
C
D
BAT (ABS)
BAT
No.30 (20A)
WHT/YEL
No 15 (100A)
No.37 (15A)
WHT/BLU
IG2
YEL
IG1
BLK/YEL
No 2 (15A)
ACC
WHT/BLU
No 1 (10A)
TAILLIGHT RELAY
(With security system)
<5-B> or <6-B>
COMBINATION LIGHT SWITCH
(Without security system)
<6-B>
56
RED/BLK
DASH LIGHTS BRIGHTNESS CONTROLLER
CONTROL CIRCUIT
LIGHT (1.14W)
RED/BLK
BLK
G401
G402
RED
15
HEATER CONTROL PANEL LIGHTS (1.4Wx3) <17-D>
GAUGE LIGHTS (1.4Wx2, 1.7Wx2, 3.0Wx4) <2-B>
A/T GEAR POSITION CONSOLE LIGHT (1.4W) <3-A>
A/T GEAR POSITION INDICATOR DIMMING CIRCUIT <3-B>
REAR WINDOW DEFOGGER SWITCH LIGHT (0.84W) <9-D>
HAZARD WARNING SWITCH LIGHT (0.84W) <9-C>
CIGARETTE LIGHTER LIGHT (1.4W) <8-B>
POWER MIRROR SWITCH LIGHT (0.91W) <11-B>
MOONROOF SWITCH LIGHT (0.91W) <11-C>
CRUISE MAIN SWITCH LIGHT (0.84W) <13-C>
FRONT FOG LIGHT SWITCH LIGHT (0.84W) <5-D>
30
INTEGRATED CONTROL UNIT <4-C
STEREO RADIO CASSETTE PLAY <10-C
CLOCK <8-C>
GLOVE BOX LID
(3.4W)
GLOVE BOX LIGHT
MIRROR COVER
(2.0W)
DRIVER'S VANITY MIRROR LIGHT
PASSENGER'S VANITY MIRROR LIGHT
LEFT FRONT PARKING LIGHT (3CP)
RIGHT FRONT PARKING LIGHT (3CP)
LEFT TAILLIGHTS (3CPx2)
RIGHT TAILLIGHTS (3CPx2)
LICENSE PLATE LIGHTS (8Wx2)
G301
G201
G501

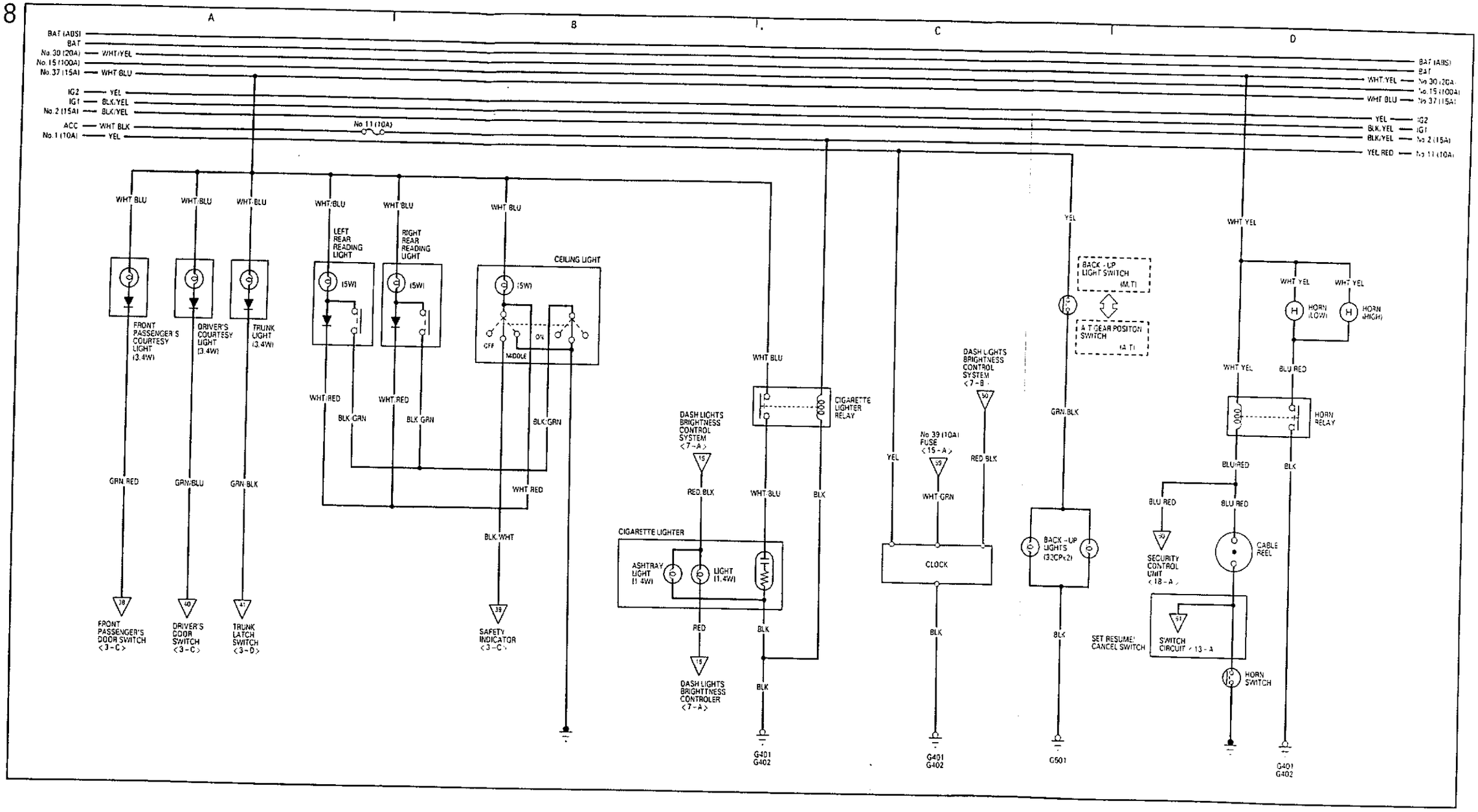
A
B
C
D
BAT (ABS)
BAT
No.30 (20A)
No.15 (100A)
No.37 (15A)
IG2
IG1
No.2 (15A)
ACC
No.1 (10A)
WHT/YEL
WHT/BLU
YEL
BLK/YEL
WHT/BLK
No.11 (10A)
YEL/RED
WHT/BLU
LEFT REAR READING LIGHT
RIGHT REAR READING LIGHT
CEILING LIGHT
(5W)
OFF
MIDDLE
ON
FRONT PASSENGER'S COURTESY LIGHT (3.4W)
DRIVER'S COURTESY LIGHT (3.4W)
TRUNK LIGHT (3.4W)
WHT/RED
BLK/GRN
GRN/RED
GRN/BLU
GRN/BLK
BLK/WHT
FRONT PASSENGER'S DOOR SWITCH <3-C>
DRIVER'S DOOR SWITCH <3-C>
TRUNK LATCH SWITCH <3-D>
SAFETY INDICATOR <3-C>
DASH LIGHTS BRIGHTNESS CONTROL SYSTEM <7-A>
RED/BLK
RED
DASH LIGHTS BRIGHTNESS CONTROLER <7-A>
CIGARETTE LIGHTER
ASHTRAY LIGHT (1.4W)
LIGHT (1.4W)
CIGARETTE LIGHTER RELAY
BLK
G401
G402
YEL
No.39 (10A) FUSE <15-A>
WHT/GRN
RED/BLK
CLOCK
BACK-UP LIGHT SWITCH (M.T)
A.T GEAR POSITON SWITCH (A.T)
GRN/BLK
BACK-UP LIGHTS (32CP×2)
G501
WHT/YEL
HORN (LOW)
HORN (HIGH)
BLU/RED
HORN RELAY
SECURITY CONTROL UNIT <18-A>
CABLE REEL
SET RESUME/ CANCEL SWITCH
SWITCH CIRCUIT <13-A>
HORN SWITCH

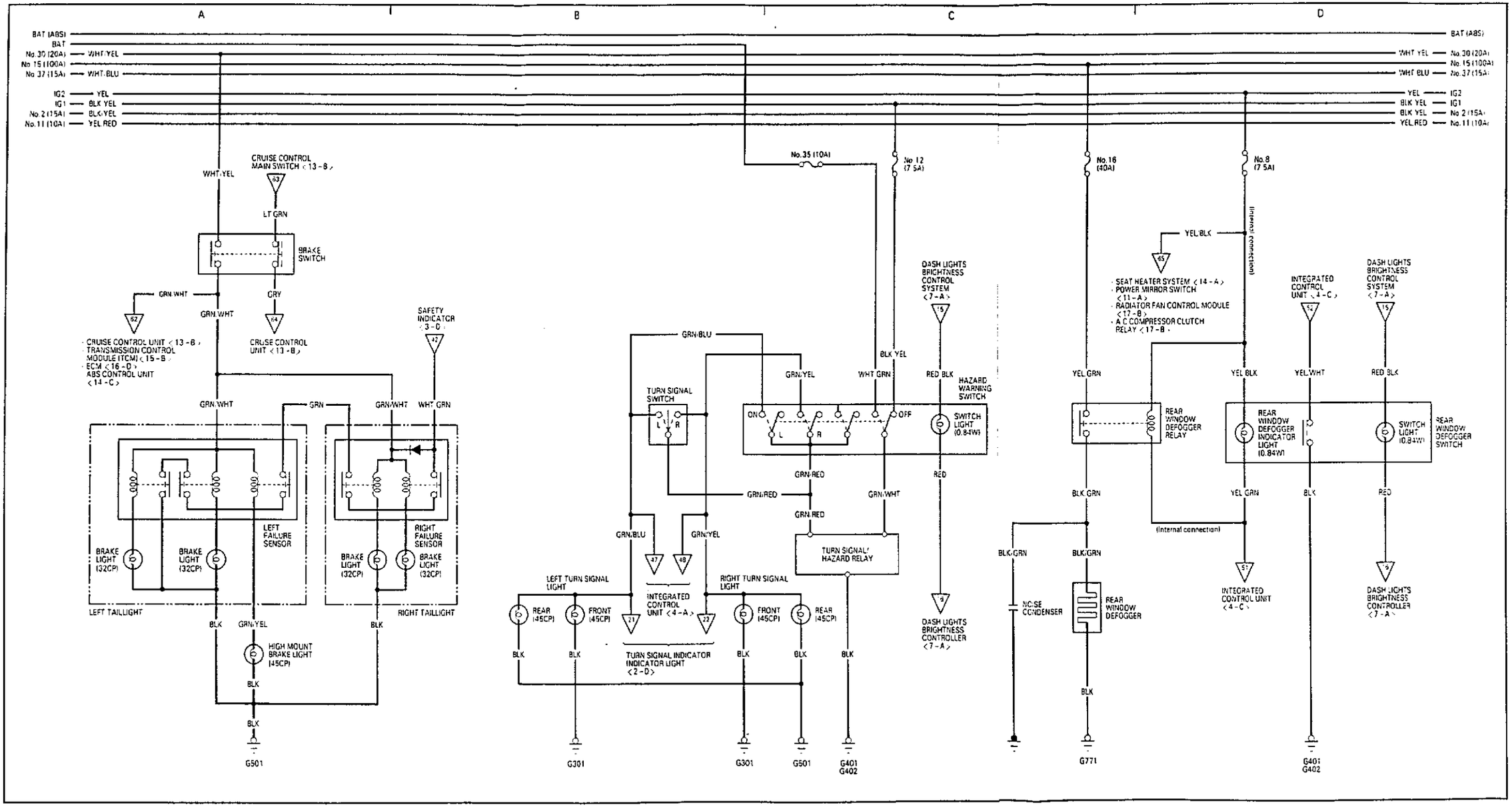
A
B
C
D
BAT (ABS)
BAT
No.30 (20A)
No.15 (100A)
No.37 (15A)
IG2
IG1
No.2 (15A)
No.11 (10A)
WHT/YEL
WHT/BLU
YEL
BLK/YEL
YEL/RED
CRUISE CONTROL MAIN SWITCH <13-B>
LT GRN
BRAKE SWITCH
GRN/WHT
GRY
CRUISE CONTROL UNIT <13-B>
CRUISE CONTROL UNIT <13-B>
TRANSMISSION CONTROL MODULE (TCM) <15-B>
ECM <16-D>
ABS CONTROL UNIT <14-C>
SAFETY INDICATOR <3-D>
GRN
LEFT FAILURE SENSOR
RIGHT FAILURE SENSOR
BRAKE LIGHT (32CP)
LEFT TAILLIGHT
RIGHT TAILLIGHT
BLK
GRN/YEL
HIGH MOUNT BRAKE LIGHT (45CP)
G501
No.35 (10A)
No.12 (7.5A)
No.16 (40A)
No.8 (7.5A)
GRN/BLU
TURN SIGNAL SWITCH
L
R
ON
OFF
GRN/YEL
WHT/GRN
BLK/YEL
RED/BLK
HAZARD WARNING SWITCH
SWITCH LIGHT (0.84W)
DASH LIGHTS BRIGHTNESS CONTROL SYSTEM <7-A>
GRN/RED
RED
TURN SIGNAL/ HAZARD RELAY
LEFT TURN SIGNAL LIGHT
RIGHT TURN SIGNAL LIGHT
REAR (45CP)
FRONT (45CP)
INTEGRATED CONTROL UNIT <4-A>
TURN SIGNAL INDICATOR INDICATOR LIGHT <2-D>
DASH LIGHTS BRIGHTNESS CONTROLLER <7-A>
G301
G401
G402
YEL/BLK
(Internal connection)
SEAT HEATER SYSTEM <14-A>
POWER MIRROR SWITCH <11-A>
RADIATOR FAN CONTROL MODULE <17-B>
A.C COMPRESSOR CLUTCH RELAY <17-B>
INTEGRATED CONTROL UNIT <4-C>
YEL/GRN
YEL/BLK
YEL/WHT
BLK/GRN
REAR WINDOW DEFOGGER RELAY
REAR WINDOW DEFOGGER INDICATOR LIGHT (0.84W)
REAR WINDOW DEFOGGER SWITCH
NOISE CONDENSER
REAR WINDOW DEFOGGER
INTEGRATED CONTROL UNIT <4-C>
DASH LIGHTS BRIGHTNESS CONTROLLER <7-A>
G771

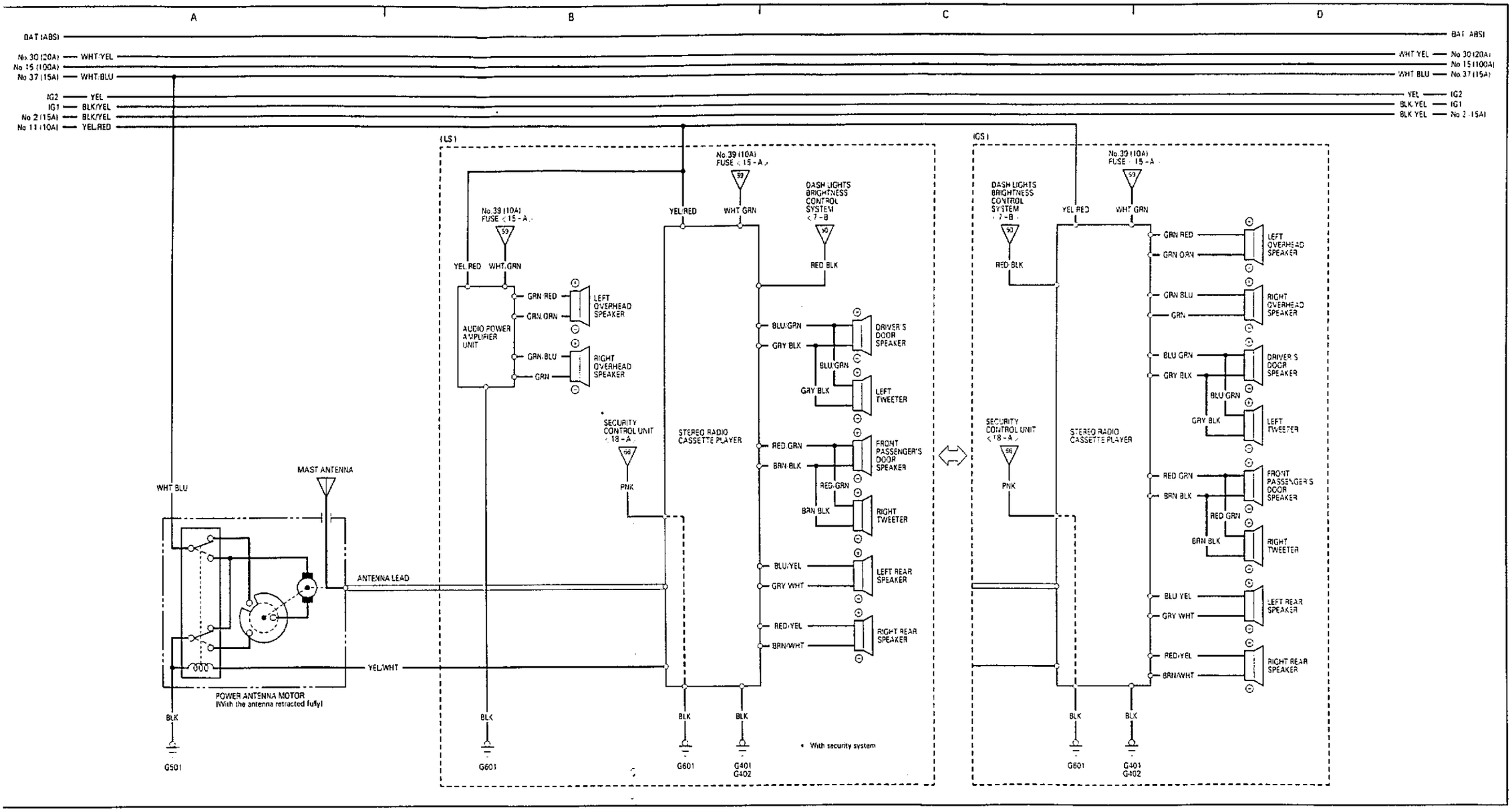
A
B
C
D
BAT (ABS)
No.30 (20A)
WHT/YEL
No.15 (100A)
No.37 (15A)
WHT/BLU
IG2
YEL
IG1
BLK/YEL
No.2 (15A)
BLK/YEL
No.11 (10A)
YEL/RED
(LS)
(GS)
No.39 (10A)
FUSE (15-A)
59
YEL/RED
WHT/GRN
DASH LIGHTS BRIGHTNESS CONTROL SYSTEM (7-B)
50
RED/BLK
AUDIO POWER AMPLIFIER UNIT
GRN/RED
GRN/ORN
GRN/BLU
GRN
LEFT OVERHEAD SPEAKER
RIGHT OVERHEAD SPEAKER
SECURITY CONTROL UNIT (18-A)
56
PNK
STEREO RADIO CASSETTE PLAYER
BLU/GRN
GRY/BLK
DRIVER'S DOOR SPEAKER
LEFT TWEETER
RED/GRN
BRN/BLK
FRONT PASSENGER'S DOOR SPEAKER
RIGHT TWEETER
BLU/YEL
GRY/WHT
LEFT REAR SPEAKER
RED/YEL
BRN/WHT
RIGHT REAR SPEAKER
MAST ANTENNA
WHT/BLU
ANTENNA LEAD
YEL/WHT
POWER ANTENNA MOTOR
(With the antenna retracted fully)
BLK
G501
G601
G401
G402
* With security system

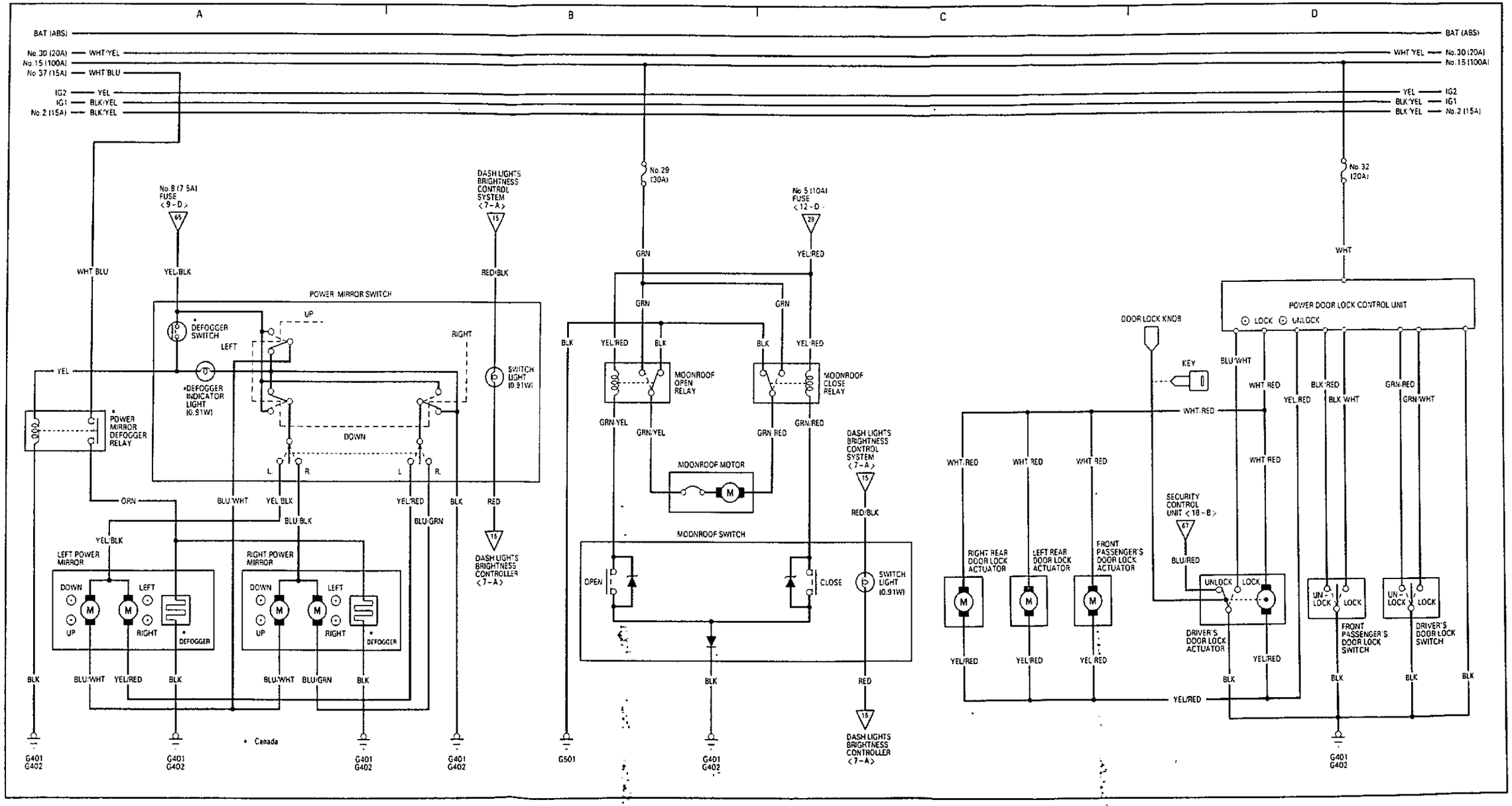
A
B
C
D
BAT (ABS)
No.30 (20A)
WHT/YEL
No.15 (100A)
No.37 (15A)
WHT/BLU
IG2
YEL
IG1
BLK/YEL
No.2 (15A)
No.8 (7.5A) FUSE <9-D>
YEL/BLK
WHT/BLU
POWER MIRROR SWITCH
DEFOGGER SWITCH
UP
LEFT
RIGHT
DOWN
L
R
*DEFOGGER INDICATOR LIGHT (0.91W)
SWITCH LIGHT (0.91W)
DASH LIGHTS BRIGHTNESS CONTROL SYSTEM <7-A>
RED/BLK
DASH LIGHTS BRIGHTNESS CONTROLLER <7-A>
POWER MIRROR DEFOGGER RELAY
ORN
BLU/WHT
YEL/BLK
BLU/BLK
YEL/RED
BLU/GRN
BLK
RED
LEFT POWER MIRROR
RIGHT POWER MIRROR
DOWN
LEFT
UP
RIGHT
DEFOGGER
* Canada
G401
G402
No.29 (30A)
GRN
No.5 (10A) FUSE <12-D>
YEL/RED
MOONROOF OPEN RELAY
MOONROOF CLOSE RELAY
GRN/YEL
GRN/RED
MOONROOF MOTOR
MOONROOF SWITCH
OPEN
CLOSE
G501
No.32 (20A)
WHT
POWER DOOR LOCK CONTROL UNIT
LOCK
UNLOCK
DOOR LOCK KNOB
KEY
BLU/WHT
WHT/RED
BLK/RED
GRN/RED
YEL/RED
BLK/WHT
GRN/WHT
SECURITY CONTROL UNIT <18-B>
BLU/RED
RIGHT REAR DOOR LOCK ACTUATOR
LEFT REAR DOOR LOCK ACTUATOR
FRONT PASSENGER'S DOOR LOCK ACTUATOR
DRIVER'S DOOR LOCK ACTUATOR
FRONT PASSENGER'S DOOR LOCK SWITCH
DRIVER'S DOOR LOCK SWITCH
UN-LOCK
LOCK

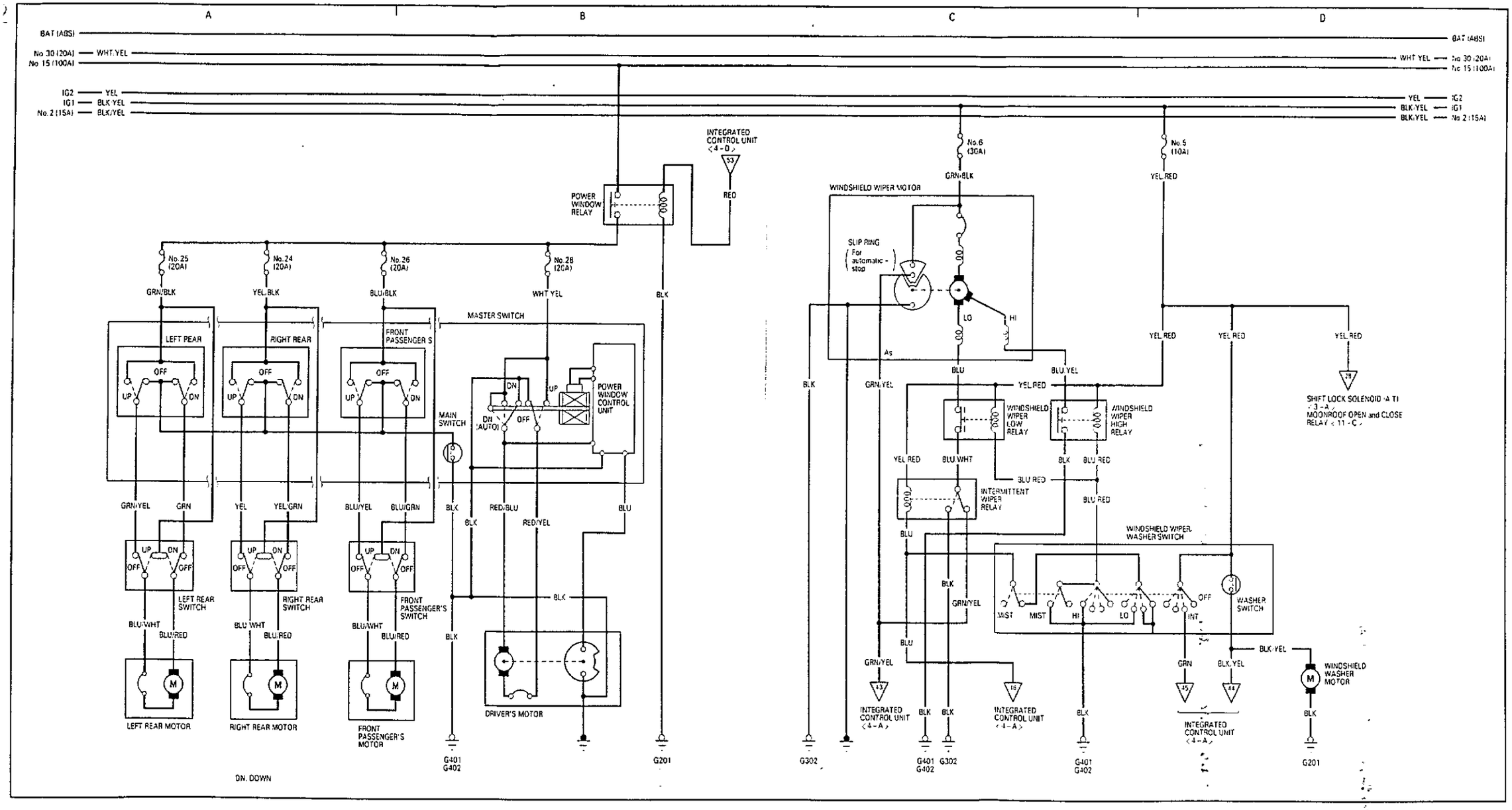
A
B
C
D
BAT (ABS)
No.30 (20A)
No.15 (100A)
WHT/YEL
IG2
IG1
No.2 (15A)
YEL
BLK/YEL
INTEGRATED CONTROL UNIT <4-D>
POWER WINDOW RELAY
RED
No.25 (20A)
No.24 (20A)
No.26 (20A)
No.28 (20A)
GRN/BLK
YEL/BLK
BLU/BLK
WHT/YEL
BLK
MASTER SWITCH
LEFT REAR
RIGHT REAR
FRONT PASSENGER'S
OFF
UP
DN
MAIN SWITCH
DN (AUTO)
POWER WINDOW CONTROL UNIT
GRN/YEL
GRN
YEL
YEL/GRN
BLU/YEL
BLU/GRN
RED/BLU
RED/YEL
BLU
LEFT REAR SWITCH
RIGHT REAR SWITCH
FRONT PASSENGER'S SWITCH
BLU/WHT
BLU/RED
LEFT REAR MOTOR
RIGHT REAR MOTOR
FRONT PASSENGER'S MOTOR
DRIVER'S MOTOR
G401
G402
G201
DN: DOWN
No.6 (30A)
No.5 (10A)
GRN/BLK
YEL/RED
WINDSHIELD WIPER MOTOR
SLIP RING (For automatic stop)
LO
HI
As
BLU
BLU/YEL
GRN/YEL
YEL/RED
WINDSHIELD WIPER LOW RELAY
WINDSHIELD WIPER HIGH RELAY
BLU/WHT
BLU/RED
INTERMITTENT WIPER RELAY
SHIFT LOCK SOLENOID (A/T) <3-A>
MOONROOF OPEN and CLOSE RELAY <11-C>
WINDSHIELD WIPER WASHER SWITCH
MIST
INT
OFF
WASHER SWITCH
GRN
BLK/YEL
WINDSHIELD WASHER MOTOR
INTEGRATED CONTROL UNIT <4-A>
G302

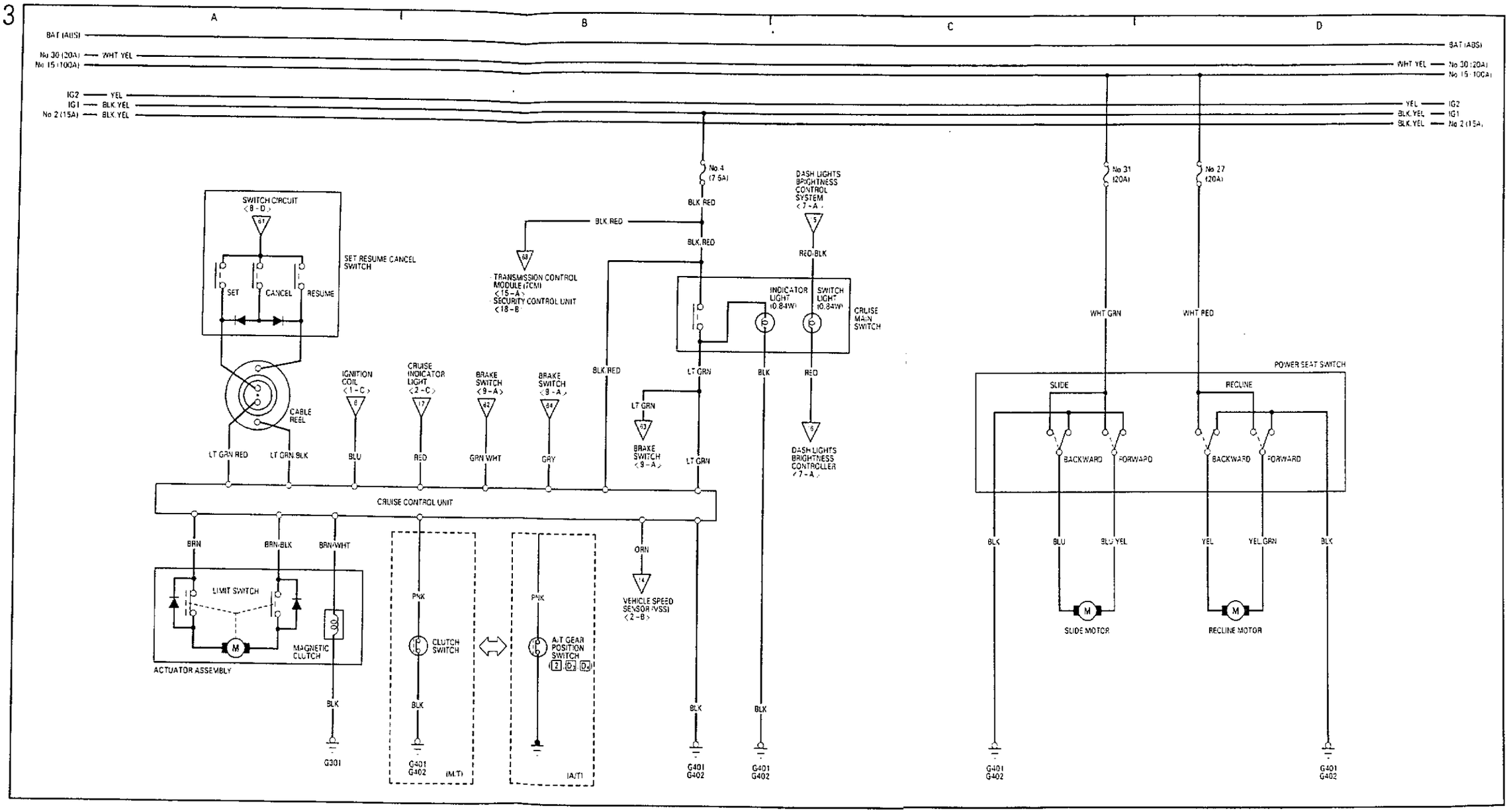
A
B
C
D
BAT (ABS)
No 30 (20A)
WHT YEL
No 15 (100A)
IG2
YEL
IG1
BLK YEL
No 2 (15A)
No 4 (7.5A)
BLK RED
DASH LIGHTS BRIGHTNESS CONTROL SYSTEM <7-A>
RED BLK
No 31 (20A)
No 27 (20A)
WHT GRN
WHT RED
SWITCH CIRCUIT <8-D>
SET RESUME CANCEL SWITCH
SET
CANCEL
RESUME
TRANSMISSION CONTROL MODULE (TCM) <15-A>
SECURITY CONTROL UNIT <18-B>
INDICATOR LIGHT (0.84W)
SWITCH LIGHT (0.84W)
CRUISE MAIN SWITCH
POWER SEAT SWITCH
SLIDE
RECLINE
BACKWARD
FORWARD
CABLE REEL
IGNITION COIL <1-C>
CRUISE INDICATOR LIGHT <2-C>
BRAKE SWITCH <9-A>
LT GRN
BLK
RED
LT GRN RED
LT GRN BLK
BLU
GRN WHT
GRY
BRAKE SWITCH <9-A>
DASH LIGHTS BRIGHTNESS CONTROLLER <7-A>
CRUISE CONTROL UNIT
BRN
BRN BLK
BRN WHT
ORN
VEHICLE SPEED SENSOR (VSS) <2-B>
LIMIT SWITCH
MAGNETIC CLUTCH
ACTUATOR ASSEMBLY
PNK
CLUTCH SWITCH
A/T GEAR POSITION SWITCH
BLU YEL
YEL
YEL GRN
SLIDE MOTOR
RECLINE MOTOR
G301
G401
G402
(M/T)
(A/T)

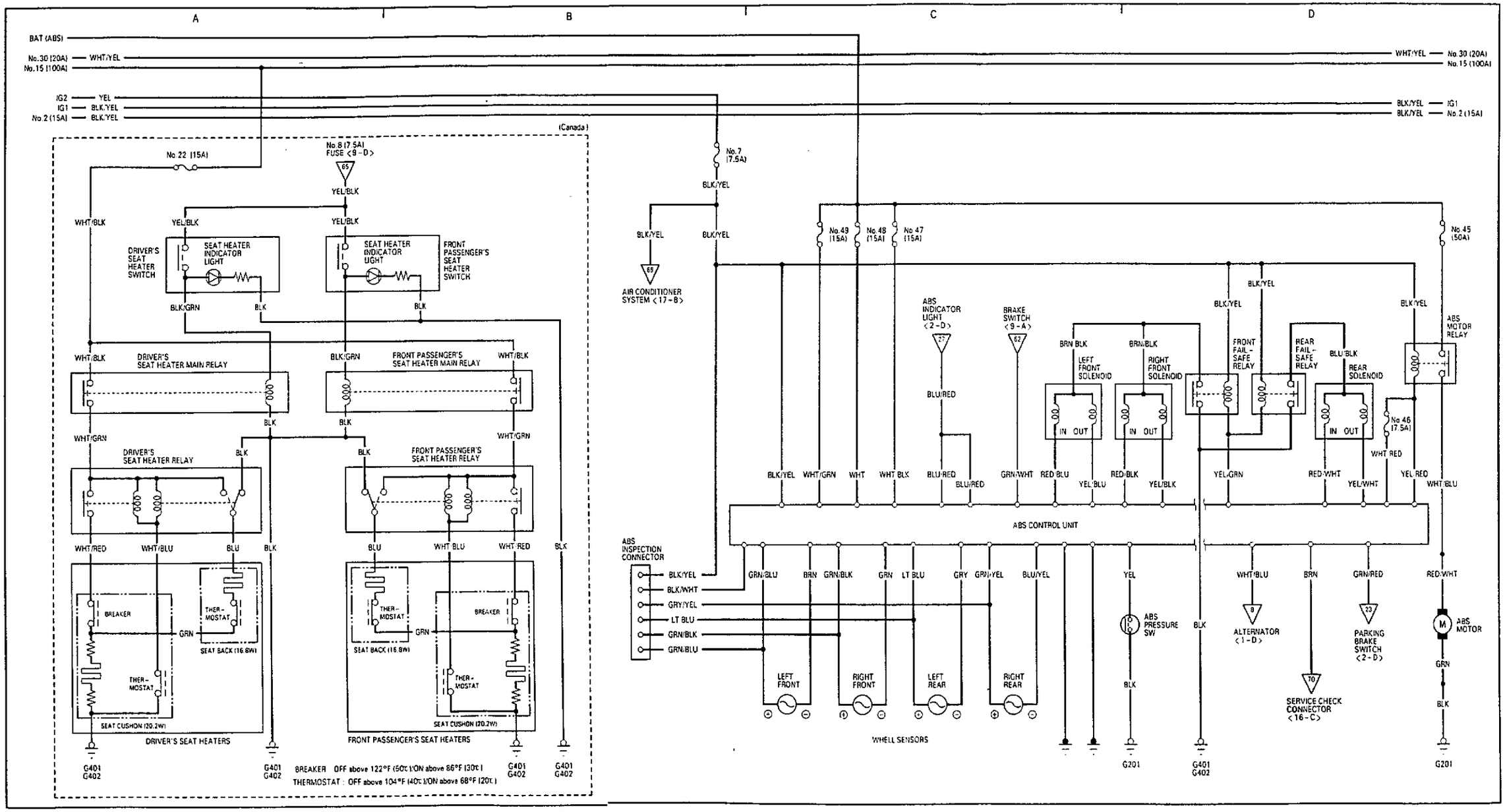
A
B
C
D
BAT (ABS)
No.30 (20A)
No.15 (100A)
WHT/YEL
IG2
IG1
No.2 (15A)
YEL
BLK/YEL
(Canada)
No.22 (15A)
No.8 (7.5A) FUSE <9-D>
YEL/BLK
WHT/BLK
DRIVER'S SEAT HEATER SWITCH
SEAT HEATER INDICATOR LIGHT
FRONT PASSENGER'S SEAT HEATER SWITCH
BLK/GRN
BLK
DRIVER'S SEAT HEATER MAIN RELAY
FRONT PASSENGER'S SEAT HEATER MAIN RELAY
WHT/GRN
DRIVER'S SEAT HEATER RELAY
FRONT PASSENGER'S SEAT HEATER RELAY
WHT/RED
WHT/BLU
BLU
BREAKER
THER-MOSTAT
GRN
SEAT BACK (16.8W)
SEAT CUSHION (20.2W)
DRIVER'S SEAT HEATERS
FRONT PASSENGER'S SEAT HEATERS
G401
G402
BREAKER OFF above 122°F (50°C)/ON above 86°F (30°C)
THERMOSTAT : OFF above 104°F (40°C)/ON above 68°F (20°C)
No.7 (7.5A)
AIR CONDITIONER SYSTEM <17-B>
No.49 (15A)
No.48 (15A)
No.47 (15A)
No.45 (50A)
ABS INDICATOR LIGHT <2-D>
BRAKE SWITCH <9-A>
BRN/BLK
LEFT FRONT SOLENOID
RIGHT FRONT SOLENOID
FRONT FAIL-SAFE RELAY
REAR FAIL-SAFE RELAY
BLU/BLK
REAR SOLENOID
ABS MOTOR RELAY
No.46 (7.5A)
IN OUT
BLU/RED
GRN/WHT
RED/BLU
YEL/BLU
RED/BLK
YEL/BLK
YEL/GRN
RED/WHT
YEL/WHT
WHT/RED
YEL/RED
WHT/BLU
ABS CONTROL UNIT
ABS INSPECTION CONNECTOR
BLK/WHT
GRY/YEL
LT BLU
GRN/BLK
GRN/BLU
BRN
GRY
GRN/YEL
BLU/YEL
YEL
ABS PRESSURE SW
ALTERNATOR <1-D>
PARKING BRAKE SWITCH <2-D>
GRN/RED
ABS MOTOR
SERVICE CHECK CONNECTOR <16-C>
LEFT FRONT
RIGHT FRONT
LEFT REAR
RIGHT REAR
WHEEL SENSORS
G201

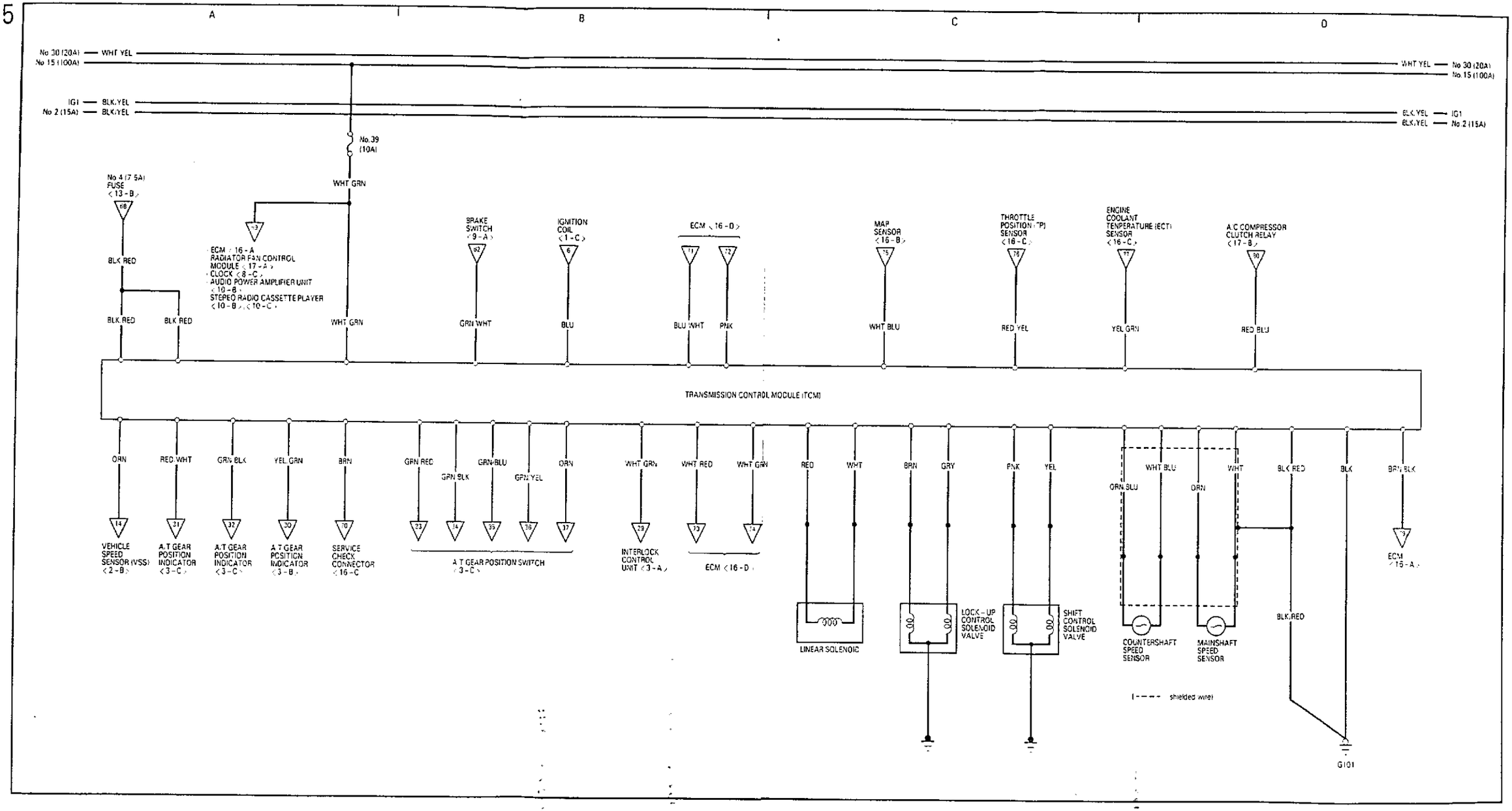
A
B
C
D
No 30 (20A) — WHT YEL
No 15 (100A)
IG1 — BLK YEL
No 2 (15A) — BLK YEL
WHT YEL — No 30 (20A)
No 15 (100A)
BLK YEL — IG1
BLK YEL — No 2 (15A)
No. 39 (10A)
WHT GRN
No 4 (7.5A) FUSE <13-B>
BLK RED
BLK RED
BLK RED
ECM <16-A>
RADIATOR FAN CONTROL MODULE <17-A>
CLOCK <8-C>
AUDIO POWER AMPLIFIER UNIT <10-B>
STEREO RADIO CASSETTE PLAYER <10-B>, <10-C>
WHT GRN
BRAKE SWITCH <9-A>
GRN WHT
IGNITION COIL <1-C>
BLU
ECM <16-D>
BLU WHT
PNK
MAP SENSOR <16-B>
WHT BLU
THROTTLE POSITION (TP) SENSOR <16-C>
RED YEL
ENGINE COOLANT TEMPERATURE (ECT) SENSOR <16-C>
YEL GRN
A/C COMPRESSOR CLUTCH RELAY <17-B>
RED BLU
TRANSMISSION CONTROL MODULE (TCM)
ORN
RED WHT
GRN BLK
YEL GRN
BRN
GRN RED
GRN BLK
GRN BLU
GRN YEL
ORN
WHT GRN
WHT RED
WHT GRN
RED
WHT
BRN
GRY
PNK
YEL
ORN BLU
WHT BLU
ORN
WHT
BLK RED
BLK
BRN BLK
VEHICLE SPEED SENSOR (VSS) <2-B>
A/T GEAR POSITION INDICATOR <3-C>
A/T GEAR POSITION INDICATOR <3-C>
A/T GEAR POSITION INDICATOR <3-B>
SERVICE CHECK CONNECTOR <16-C
A/T GEAR POSITION SWITCH <3-C>
INTERLOCK CONTROL UNIT <3-A>
ECM <16-D>
ECM <15-A>
LINEAR SOLENOID
LOCK-UP CONTROL SOLENOID VALVE
SHIFT CONTROL SOLENOID VALVE
COUNTERSHAFT SPEED SENSOR
MAINSHAFT SPEED SENSOR
BLK RED
shielded wire
G101

15

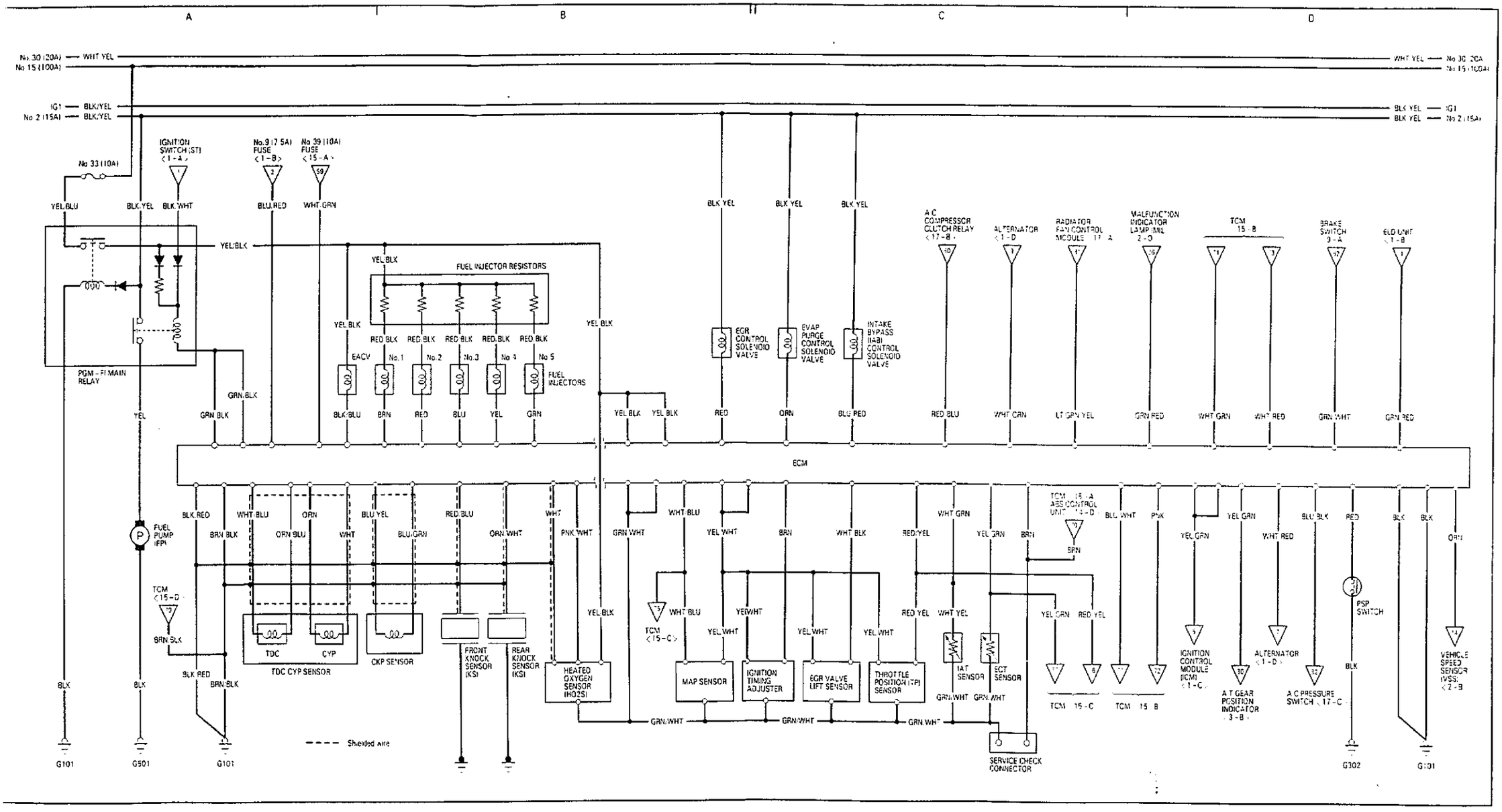
A
B
C
D
No.30 (20A)
No.15 (10A)
WHT/YEL
IG1
BLK/YEL
No.2 (15A)
IGNITION SWITCH (ST) <1-A>
No.9 (7.5A) FUSE <1-B>
No.39 (10A) FUSE <15-A>
No.33 (10A)
YEL/BLU
BLK/YEL
BLK/WHT
BLU/RED
WHT/GRN
YEL/BLK
PGM-FI MAIN RELAY
FUEL INJECTOR RESISTORS
RED/BLK
EACV
No.1
No.2
No.3
No.4
No.5
FUEL INJECTORS
BLK/BLU
BRN
RED
BLU
YEL
GRN
GRN/BLK
EGR CONTROL SOLENOID VALVE
EVAP PURGE CONTROL SOLENOID VALVE
INTAKE BYPASS (IABI) CONTROL SOLENOID VALVE
A/C COMPRESSOR CLUTCH RELAY <17-B>
ALTERNATOR <1-D>
RADIATOR FAN CONTROL MODULE
MALFUNCTION INDICATOR LAMP (MIL) 2-D
TCM 15-B
BRAKE SWITCH 9-A
ELD UNIT <1-B>
RED/BLU
WHT/GRN
LT GRN/YEL
GRN/RED
WHT/RED
GRN/WHT
ECM
FUEL PUMP (FP)
TCM <15-D>
BRN/BLK
BLK/RED
WHT/BLU
ORN
ORN/BLU
BLU/YEL
BLU/GRN
RED/BLU
ORN/WHT
WHT
PNK/WHT
GRN/WHT
YEL/WHT
BRN
WHT/BLK
RED/YEL
WHT/GRN
YEL/GRN
TCM 15-A ABS CONTROL UNIT
BLU/WHT
PNK
YEL/GRN
WHT/RED
BLU/BLK
RED
BLK
ORN
TDC
CYP
TDC CYP SENSOR
CKP SENSOR
FRONT KNOCK SENSOR (KS)
REAR KNOCK SENSOR (KS)
HEATED OXYGEN SENSOR (HO2S)
MAP SENSOR
IGNITION TIMING ADJUSTER
EGR VALVE LIFT SENSOR
THROTTLE POSITION (TP) SENSOR
IAT SENSOR
ECT SENSOR
TCM <15-C>
TCM 15-C
TCM 15-B
IGNITION CONTROL MODULE (ICM) <1-C>
A/T GEAR POSITION INDICATOR <3-B>
ALTERNATOR <1-D>
A/C PRESSURE SWITCH <17-C>
PSP SWITCH
VEHICLE SPEED SENSOR (VSS) <2-B>
SERVICE CHECK CONNECTOR
Shielded wire
G101
G501
G302

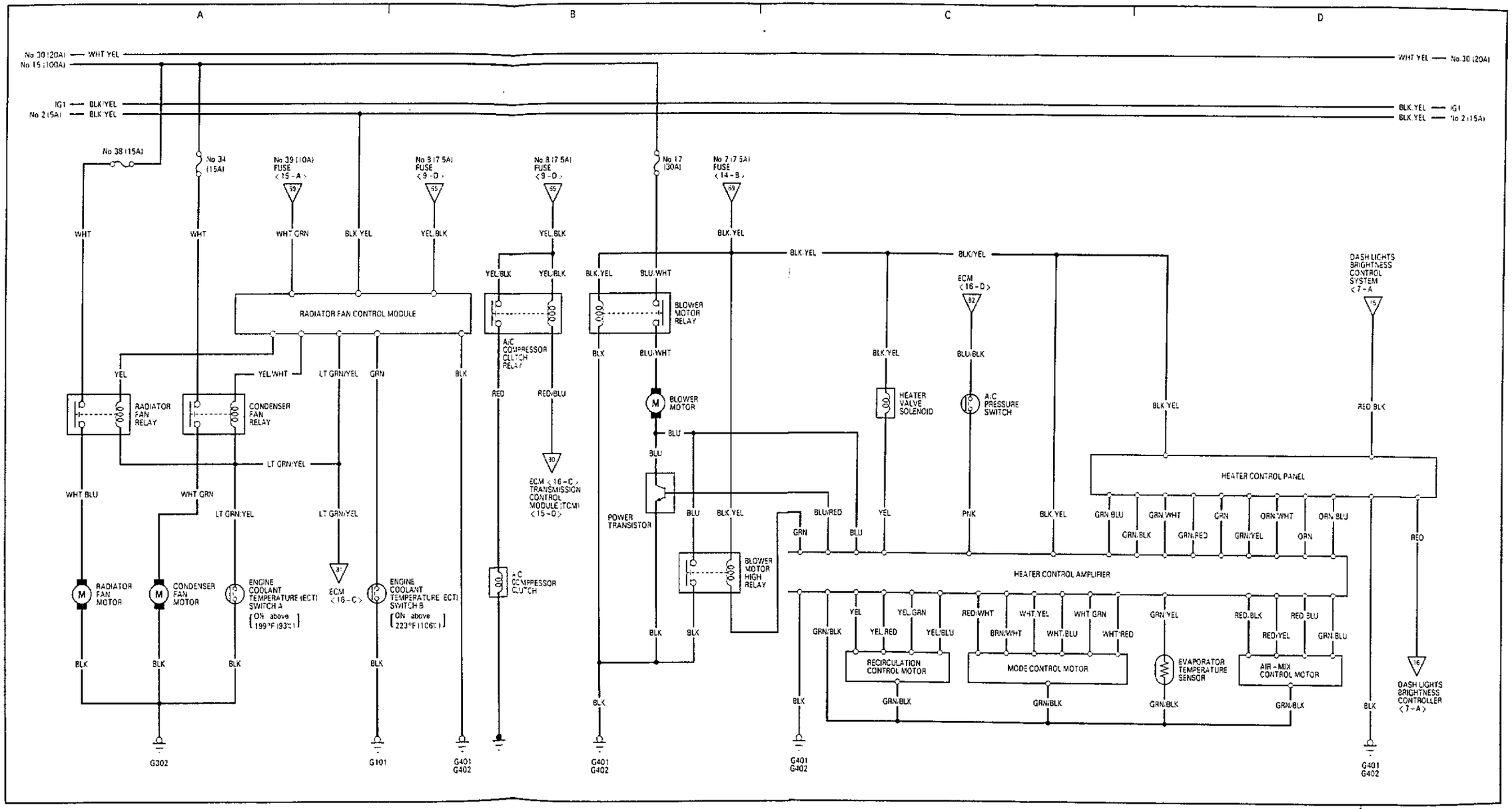
A
B
C
D
No 30 (20A)
No 15 (100A)
WHT YEL
IG1
No 2 (15A)
BLK YEL
No 38 (15A)
No 34 (15A)
No 39 (10A) FUSE <15-A>
No 8 (7.5A) FUSE <9-D>
No 8 (7.5A) FUSE <9-D>
No 17 (30A)
No 7 (7.5A) FUSE <14-B>
WHT
WHT GRN
BLK YEL
YEL BLK
BLU WHT
RADIATOR FAN CONTROL MODULE
A/C COMPRESSOR CLUTCH RELAY
BLOWER MOTOR RELAY
YEL
YEL WHT
LT GRN/YEL
GRN
BLK
RED
RED/BLU
BLU
RADIATOR FAN RELAY
CONDENSER FAN RELAY
ECM <16-C> TRANSMISSION CONTROL MODULE (TCM) <15-D>
BLOWER MOTOR
WHT BLU
POWER TRANSISTOR
BLU/RED
ECM <16-D>
BLU/BLK
HEATER VALVE SOLENOID
A/C PRESSURE SWITCH
PNK
DASH LIGHTS BRIGHTNESS CONTROL SYSTEM <7-A>
RED BLK
HEATER CONTROL PANEL
GRN BLU
GRN WHT
GRN
ORN WHT
ORN BLU
GRN BLK
GRN RED
GRN YEL
ORN
HEATER CONTROL AMPLIFIER
BLOWER MOTOR HIGH RELAY
A/C COMPRESSOR CLUTCH
RADIATOR FAN MOTOR
CONDENSER FAN MOTOR
ENGINE COOLANT TEMPERATURE (ECT) SWITCH A
[ON above 199°F (93°C)]
ECM <16-C>
ENGINE COOLANT TEMPERATURE (ECT) SWITCH B
[ON above 223°F (106°C)]
YEL GRN
RED WHT
WHT YEL
WHT GRN
GRN YEL
RED BLK
RED BLU
YEL RED
YEL BLU
BRN WHT
WHT BLU
WHT RED
RED YEL
GRN BLU
GRN BLK
RECIRCULATION CONTROL MOTOR
MODE CONTROL MOTOR
EVAPORATOR TEMPERATURE SENSOR
AIR-MIX CONTROL MOTOR
DASH LIGHTS BRIGHTNESS CONTROLLER <7-A>
G302
G101
G401
G402

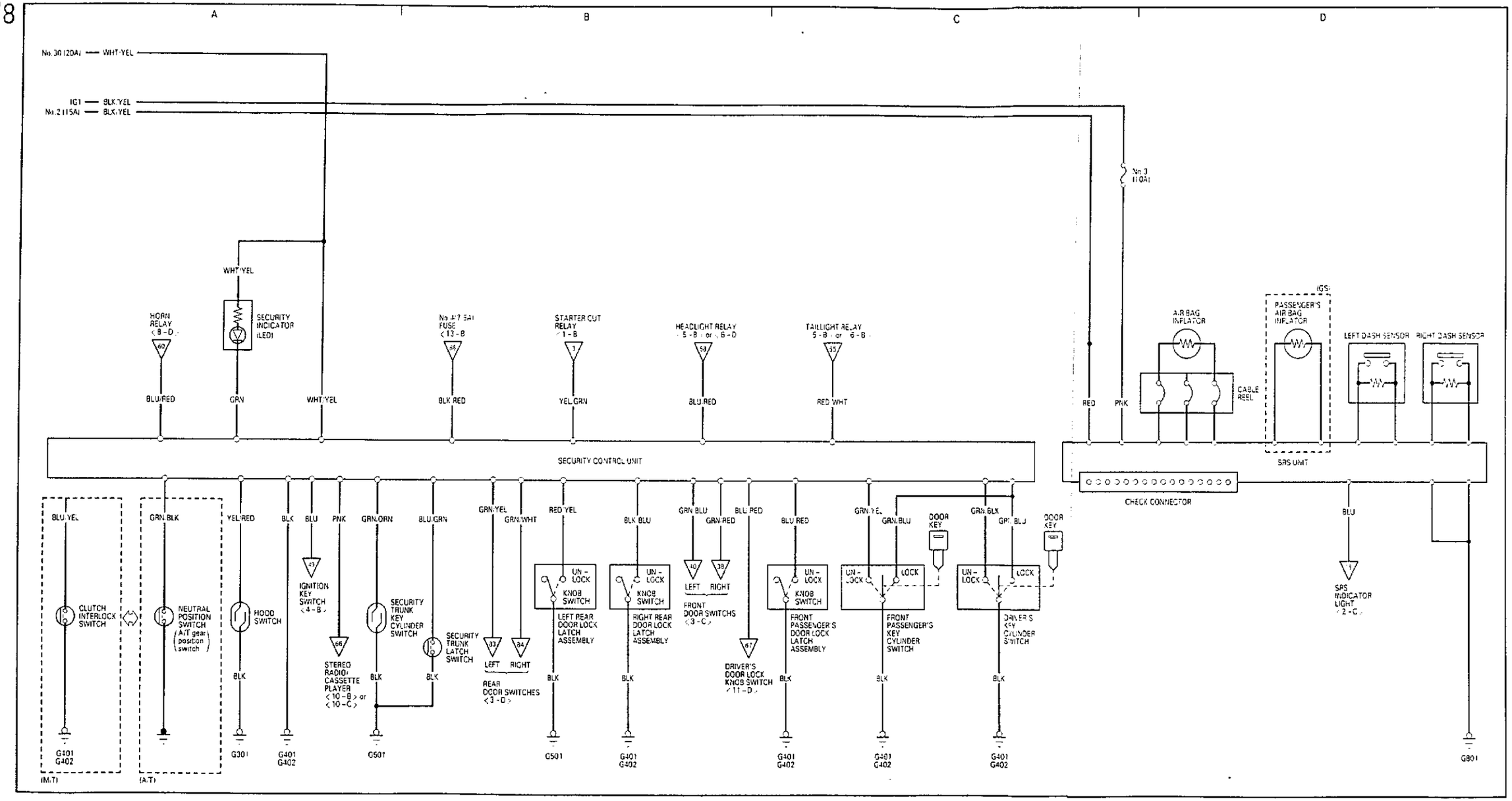
A
B
C
D
No.30 (20A) — WHT/YEL
IG1 — BLK/YEL
No.2 (15A) — BLK/YEL
No.3 (10A)
WHT/YEL
HORN RELAY (8-D)
SECURITY INDICATOR (LED)
No.17 (5A) FUSE (13-B)
STARTER CUT RELAY (1-B)
HEADLIGHT RELAY (5-B) or (6-D)
TAILLIGHT RELAY (5-B) or (6-B)
BLU/RED
GRN
WHT/YEL
BLK/RED
YEL/GRN
BLU/RED
RED/WHT
RED
PNK
AIR BAG INFLATOR
CABLE REEL
(GS)
PASSENGER'S AIR BAG INFLATOR
LEFT DASH SENSOR
RIGHT DASH SENSOR
SECURITY CONTROL UNIT
SRS UNIT
CHECK CONNECTOR
BLU/YEL
GRN/BLK
YEL/RED
BLK
BLU
PNK
GRN/ORN
BLU/GRN
GRN/YEL
GRN/WHT
RED/YEL
BLK/BLU
GRN/BLU
GRN/RED
BLU/RED
BLU/RED
GRN/YEL
GRN/BLU
GRN/BLK
GRN/BLU
DOOR KEY
DOOR KEY
BLU
CLUTCH INTERLOCK SWITCH
NEUTRAL POSITION SWITCH (A/T gear position switch)
HOOD SWITCH
IGNITION KEY SWITCH (4-B)
STEREO RADIO/ CASSETTE PLAYER (10-B) or (10-C)
SECURITY TRUNK KEY CYLINDER SWITCH
SECURITY TRUNK LATCH SWITCH
LEFT
RIGHT
REAR DOOR SWITCHES (3-D)
UN-LOCK
KNOB SWITCH
LEFT REAR DOOR LOCK LATCH ASSEMBLY
RIGHT REAR DOOR LOCK LATCH ASSEMBLY
LEFT
RIGHT
FRONT DOOR SWITCHS (3-C)
DRIVER'S DOOR LOCK KNOB SWITCH (11-D)
FRONT PASSENGER'S DOOR LOCK LATCH ASSEMBLY
LOCK
FRONT PASSENGER'S KEY CYLINDER SWITCH
DRIVER'S KEY CYLINDER SWITCH
SRS INDICATOR LIGHT (2-C)
BLK
G401
G402
G301
G501
G801
(M/T)
(A/T)